CATALOG

Weatherproof

Section C

Table of Contents

Non-Metallic Low-Profile Expandable In-Use Covers

Outdoor Deck Outlet Covers

Metal Receptacle/Cover Combos & Kits

TAYMAC® Weatherproof Covers & Conduit Bodies

- General Information C-2
- Non-Metallic In-Use Covers C-5
- Non-Metallic Flat & Flat Expandable Covers C-7
- Outdoor Deck Outlet Covers. C-10
- Non-Metallic Receptacle/Cover Combos & Kits C-12
- Metal Receptacle/Cover Combos & Kits. C-13
- Metal In-Use Covers C-14
- Metal Low Profile In-Use Covers. C-15
- Weatherproof Accessories. C-16
- Conduit Bodies. C-17
- Product Drawings C-24

Standards, 2020 National Electrical Code®

HUBBELL® TAYMAC® UPC Vendor Number 092326 or 050169.

Where applicable, HUBBELL® TAYMAC® products are engineered in accordance with the standards established by Underwriters Laboratories and the Canadian Standards Association. Dimensional data listed in this catalog is intended for general reference with broad tolerance limits.

2020 NEC®

When specifying HUBBELL® TAYMAC® Weatherproof boxes and covers, consult the requirements of the National Electrical Code®, Section 314.16 (B) and 406.9 (B). Section 314.16 (B) details the NEC® requirements for the maximum number of conductors allowed for a HUBBELL® TAYMAC® Weatherproof installation. Article 406.9 (B) provides details on the NEC® requirements for receptacles being used in wet locations.

For your convenience, we have reprinted the pertinent NEC® sections. In all cases, consult your local electrical code and inspector interpretation.

Wiring Capacity: HUBBELL® TAYMAC® Weatherproof Boxes and Extensions

Maximum Number of Conductors or Minimum Size Box (Article 314.16 (B)

The purpose of Section 314.16 (B) is to determine the maximum conductor count or the minimum box size required for the job. It also can be used to figure how many other conductors may be added without exceeding the Code-prescribed limit. Most applications have determined the number of conductors. The rules of Section 314.16 (B) are used to determine the Code recognized limit, or smallest box that may be installed.

Selection of any HUBBELL® TAYMAC® Weatherproof box or extension for use in any electrical circuit work must take into consideration the maximum number of wires permitted in the box. Safe electrical practice demands that wires not be jammed into boxes because of the possibility of nicks, abrasions, or other damage to the insulating material, creating the potential for ground faults or short circuits.

314.16 Number of Conductors in Outlet, Device, and Junction Boxes, and Conduit Bodies.

Boxes and conduit bodies shall be of an approved size to provide free space for all enclosed conductors. In no case shall the volume of the box, as calculated in 314.16(A), be less than the fill calculation as calculated in 314.16(B). The minimum volume for conduit bodies shall be as calculated in 314.16(C).

The provisions of this section shall not apply to terminal housings supplied with motors or generators.

Informational Note: For volume requirements of motor or generator terminal housings, see 430.12.

Boxes and conduit bodies enclosing conductors 4 AWG or larger shall also comply with the provisions of 314.28. Outlet and device boxes shall also comply with 314.24.

(A) Box Volume Calculations. The volume of a wiring enclosure (box) shall be the total volume of the assembled sections and, where used, the space provided by plaster rings, domed covers, extension rings, and so forth, that are marked with their volume or are made from boxes the dimensions of which are listed in Table 314.16(A). Where a box is provided with one or more securely installed barriers, the volume shall be apportioned to each of the resulting spaces. Each barrier, if not marked with its volume, shall be considered to take up 8.2 cm3(1/2 in3) if metal, and 16.4 cm3 (1.0 in3) if non-metallic.

(1) Standard Boxes. The volumes of standard boxes that are not marked with their volume shall be as given in Table 314.16(A).

(2) Other Boxes. Boxes 1650 cm3 (100 in.3) or less, other than those described in Table 314.16(A), and non-metallic boxes shall be durably and legibly marked by the manufacturer with their volume(s). Boxes described in Table 314.16(A) that have a volume larger than is designated in the table shall be permitted to have their volume marked as required by this section.

(B) Box Fill Calculations. The volumes in paragraphs 314.16(B)(1) through (B)(5), as applicable, shall be added together. No allowance shall be required for small fittings such as locknuts and bushings. Each space within a box installed with a barrier shall be calculated separately.

(1) Conductor Fill. Each conductor that originates outside the box and terminates or is spliced within the box shall be counted once, and each conductor that passes through the box without splice or termination shall be counted once. Each loop or coil of unbroken conductor not less than twice the minimum length required for free conductors in 300.14 shall be counted twice. The conductor fill shall be calculated using Table 314.16(B). A conductor, no part of which leaves the box, shall not be counted.

Exception: An equipment grounding conductor or conductors or not over four fixture wires smaller than 14 AWG, or both, shall be permitted to be omitted from the calculations where they enter a box from a domed luminaire or similar canopy and terminate within that box.

(2) Clamp Fill. Where one or more internal cable clamps, whether factory or field supplied, are present in the box, a single volume allowance in accordance with Table 314.16(B) shall be made based on the largest conductor present in the box. No allowance shall be required for a cable connector with its clamping mechanism outside the box.

A clamp assembly that incorporates a cable termination for the cable conductors shall be listed and marked for use with specific non-metallic boxes. Conductors that originate within the clamp assembly shall be included in conductor fill calculations covered in 314.16(B)(1) as though they entered from outside the box. The clamp assembly shall not require a fill allowance, but the volume of the portion of the assembly that remains within the box after installation shall be excluded from the box volume as marked in 314.16(A)(2).

(3) Support Fittings Fill. Where one or more luminaire studs or hickeys are present in the box, a single volume allowance in accordance with Table 314.16(B) shall be made for each type of fitting based on the largest conductor present in the box.

(4) Device or Equipment Fill. For each yoke or strap containing one or more devices or equipment, a double volume allowance in accordance with Table 314.16(B) shall be made for each yoke

or strap based on the largest conductor connected to a device(s) or equipment supported by that yoke or strap. A device or utilization equipment wider than a single 50 mm (2 in.) device box as described in Table 314.16(A) shall have double volume allowances provided for each gang required for mounting.

(5) Equipment Grounding Conductor Fill. Where up to four equipment grounding conductors or equipment bonding jumpers enter a box, a single volume allowance in accordance with Table 314.16(B) shall be made based on the largest equipment grounding conductor or equipment bonding jumper entering in the box.

A 1/4 volume allowance shall be made for each additional equipment grounding conductor or equipment bonding jumper that enters the box, based on the largest equipment grounding conductor or equipment bonding conductor.

(C) Conduit Bodies.

(1) General. Conduit bodies enclosing 6 AWG conductors or smaller, other than short-radius conduit bodies as described in 314.16(C)(3), shall have a cross-sectional area not less than twice the cross-sectional area of the largest conduit or tubing to which they can be attached. The maximum number of conductors permitted shall be the maximum number permitted by Table 1 of Chapter 9 for the conduit or tubing to which it is attached.

2) With Splices, Taps, or Devices. Only those conduit bodies that are durably and legibly marked by the manufacturer with their volume shall be permitted to contain splices, taps, or devices. The maximum number of conductors shall be calculated in accordance with 314.16(B). Conduit bodies shall be supported in a rigid and secure manner.

(3) Short Radius Conduit Bodies. Conduit bodies such as capped elbows and service-entrance elbows that enclose conductors 6 AWG or smaller, and are only intended to enable the installation of the raceway and the contained conductors, shall not contain splices, taps, or devices and shall be of an approved size to provide free space for all conductors enclosed in the conduit body.

406.9 Receptacles in Damp or Wet Locations.

(A) Damp Locations. A receptacle installed outdoors in a location protected from the weather or in other damp locations shall have an enclosure for the receptacle that is weatherproof when the receptacle is covered (attachment plug cap not inserted and receptacle covers closed).

An installation suitable for wet locations shall also be considered suitable for damp locations.

A receptacle shall be considered to be in a location protected from the weather where located under roofed open porches, canopies, marquees, and the like, and will not be subjected to a beating rain or water runoff. All 15- and 20-ampere, 125- and 250-volt nonlocking receptacles shall be a listed weather-resistant type.

Informational Note: The types of receptacles covered by this requirement are identified as 5-15, 5-20, 6-15, and 6-20 in ANSI/NEMA WD 6–2016, Wiring Devices — Dimensional Specifications.

(B) Wet Locations.

(1) Receptacles of 15 and 20 Amperes in a Wet Location. Receptacles of 15 and 20 amperes, 125 and 250 volts installed in a wet location shall have an enclosure that is weatherproof whether or not the attachment plug cap is inserted. An outlet box hood installed for this purpose shall be listed and shall be identified as "extra-duty." Other listed products, enclosures, or assemblies providing weatherproof protection that do not utilize an outlet box hood need not be marked "extra duty."

Informational Note No. 1: Requirements for extra-duty outlet box hoods are found in ANSI/UL 514D–2016, Cover Plates for Flush-Mounted Wiring Devices.

"Extra duty" identification and requirements are not applicable to listed receptacles, faceplates, outlet boxes, enclosures, or assemblies that are identified as either being suitable for wet locations or rated as one of the outdoor enclosure–type numbers of Table 110.28 that does not utilize an outlet box hood.

Exception: 15- and 20-ampere, 125- through 250-volt receptacles installed in a wet location and subject to routine high-pressure spray washing shall be permitted to have an enclosure that is weatherproof when the attachment plug is removed.

All 15- and 20-ampere, 125- and 250-volt nonlocking-type receptacles shall be listed and so identified as the weather resistant type.

Informational Note No. 2: The configuration of weather resistant receptacles covered by this requirement are identified as 5-15, 5-20, 6-15, and 6-20 in ANSI/NEMA WD 6–2016, Wiring Devices — Dimensional Specifications.

(2) Other Receptacles. All other receptacles installed in a wet location shall comply with 406.9(B)(2)(a) or (B)(2)(b).

(a) A receptacle installed in a wet location, where the product intended to be plugged into it is not attended while in use, shall have an enclosure that is weatherproof with the attachment plug cap inserted or removed.

(b) A receptacle installed in a wet location where the product intended to be plugged into it will be attended while in use (e.g., portable tools) shall have an enclosure that is weatherproof when the attachment plug is removed.

(C) Bathtub and Shower Space. Receptacles shall not be installed within a zone measured 900 mm (3 ft) horizontally and 2.5 m (8 ft) vertically from the top of the bathtub rim or shower stall threshold. The identified zone is all-encompassing and shall include the space directly over the tub or shower stall.

Exception: In bathrooms with less than the required zone the receptacle(s) shall be permitted to be installed opposite the bathtub rim or shower stall threshold on the farthest wall within the room.

(D) Protection for Floor Receptacles. Standpipes of floor receptacles shall allow floor-cleaning equipment to be operated without damage to receptacles.

(E) Flush Mounting with Faceplate. The enclosure for a receptacle installed in an outlet box flush-mounted in a finished surface shall be made weatherproof by means of a weatherproof faceplate assembly that provides a watertight connection between the plate and the finished surface.

National Electric Code® and NEC® is a registered Trademark of the National Fire Protection Association.

General Features and Benefits

HUBBELL® TAYMAC® Weatherproof products all offer these features and benefits:

- Rugged seamless die cast construction that will not allow entry of moisture
- Reinforced connector outlets to provide a secure mechanical installation
- State-of-the-art powder coat paint for maximum weatherability and scratch resistance
- Bilingual instructions provided with every product
- Installation hardware and ground screws included where applicable
- Shrink-wrap packaging that keeps all components together
- UPC-A barcoding to help lower transaction costs Refer to the pages that follow for more specific information about HUBBELL® TAYMAC® products.

Calculate The Minimum Size Box

Section 314-16(B) describes in detail the method of counting wires, as well as clamps, fittings, or devices (i.e., switches, receptacles, combination devices) — by establishing an equivalent conductor-value for each. These values are added together to get a total number of conductors. The minimum size box is the smallest one in cubic inch size that can accommodate that number of conductors.

Points to Remember:

- No matter how many ground wires come into a box, they only count as one conductor within the box.
- Any wire running unbroken through the box counts as one wire.
- Each wire coming into a splice device (crimp or twist-on type) is counted as one wire.
- Each wire coming into the box and connecting to a device counts as one wire of that size.
- Where devices are mounted in the box, the total conductor count must be increased by two for each mounting strap.

Example – TAYMAC® Weatherproof

To calculate the minimum internal volume needed for an enclosure to supply power to a single switch using #14/2 conductors, you must account for 2 conductors, one ground, and one switch - totaling 5 allowances. Table 314.16(B) of NFPA 70 National Electrical Code states that multiplying 5 times 2.00 for the #14 conductors, will require a minimum of 10.0 cubic inches.

Table 314.16(B), Volume Allowance Required per Conductor

Size of Conductor (AWG)	Free Space Within Box for Each Conductor	
	CM3	IN.3
18	24.6	1.50
16	28.7	1.75
14	32.8	2.00
12	36.9	2.25
10	41.0	2.50
8	49.2	3.00
6	81.9	5.00

Non-Metallic In-Use Covers

1-Gang

Applications

- Designed to provide weatherproof protection while an outlet is in use

Product Features

- High-impact polycarbonate construction provides maximum durability
- Quick-Fit keyhole mounting system allows installation in under a minute
- Includes attached gasket and mounting hardware
- Universal Fit Adapter System Technology (U-Fast) for 16-in-1 configurations, comes pre-configured for GFCI
- Lockable tab (fits up to 1/8″ shackle / Extra Duty covers fit up to 1/4″ shackle)

Compliance

- File E116141
- 2020 NEC® 406.9 (A) compliant
- 2020 NEC® 406.9 (B) compliant (Extra Duty)
- NEMA 3R rated

EXTRA DUTY

MM420C

MM420G

MM420W

MM720C

MM720G

MM410C

MM410G

MM410W

MM410CW

MM410CA

MM510C

MM510G

MM710C

MM710G

16-in-1 Configurations

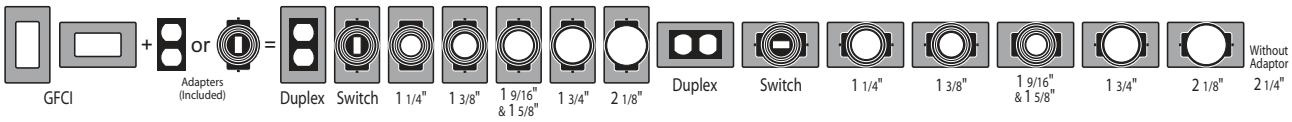

1-Gang In-Use Covers

Catalog #	Description	Depth	Color	Pkg. Type	Std. Pkg.	Barcode
MM420C	Extra Duty® Horizontal/Vertical 16-in-1 Standard	2.75″	Clear	Shrink	8	IIIIIIII
MM420G	Extra Duty® Horizontal/Vertical 16-in-1 Standard	2.75″	Gray	Shrink	8	IIIIIIII
MM420W	Extra Duty® Horizontal/Vertical 16-in-1 Standard	2.75″	White	Shrink	8	IIIIIIII
MM720C	Extra Duty® Horizontal/Vertical 16-in-1 Jumbo	4.75″	Clear	Shrink	4	IIIIIIII
MM720G	Extra Duty® Horizontal/Vertical 16-in-1 Jumbo	4.75″	Gray	Shrink	4	IIIIIIII
MM410C	Horizontal/Vertical 16-in-1 Standard	2.75″	Clear	Shrink	10	IIIIIIII
MM410CA	Horizontal/Vertical 16-in-1 Standard w/Round Box Adaptor	2.75″	Clear	Shrink	10	IIIIIIII
MM410CW	Horizontal/Vertical 16-in-1 Standard	2.75″	Clear w/ White Base	Shrink	10	IIIIIIII
MM410G	Horizontal/Vertical 16-in-1 Standard	2.75″	Gray	Shrink	10	IIIIIIII
MM410W	Horizontal/Vertical 16-in-1 Standard	2.75″	White	Shrink	10	IIIIIIII
MM510C	Horizontal/Vertical 16-in-1 Deep	3.25″	Clear	Shrink	8	IIIIIIII
MM510G	Horizontal/Vertical 16-in-1 Deep	3.25″	Gray	Shrink	8	IIIIIIII
MM710C	Horizontal/Vertical 16-in-1 Jumbo	4.75″	Clear	Shrink	5	IIIIIIII
MM710G	Horizontal/Vertical 16-in-1 Jumbo	4.75″	Gray	Shrink	5	IIIIIIII

See end of section (Pg C24) for detailed drawings »

Non-Metallic In-Use Covers

2-Gang

Applications

- Designed to provide weatherproof protection while an outlet is in use

Product Features

- High-impact polycarbonate construction provides maximum durability
- Quick-Fit keyhole mounting system allows installation in under a minute
- Includes attached gasket and mounting hardware
- Universal Fit Adapter System Technology (U-Fast) comes pre-configured for GFCI
- Lockable tab (fits up to 1/8″ shackle / MM7420 fits up to 5/16″ shackle)

Compliance

- File E116141
- 2020 NEC® 406.9 (A) compliant (MM7440C and MM7440G)
- 2020 NEC® 406.9 (B) compliant (Extra Duty MM2420C and G) (MM7420C and G)
- NEMA 3R rated

MM7440/MM7420 pre-configured for Duplex. MM2410/MM2420 pre-configured for GFCI.

EXTRA DUTY

EXTRA DUTY Jumbo Depth

MM2420C

MM2420G

MM7420C

MM7420G

MM2410C

MM2410G

55-in-1 Configurations

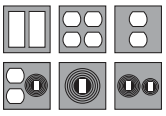

Multiple Combinations of GFCI, Duplex, Switch, and Rounds: 1-1/4″, 1-3/8″, 1-9/16, 1-5/8″, 1-11/16″, 2-1/8″, 2-1/4″, 2-7/16″

40-in-1 Configurations

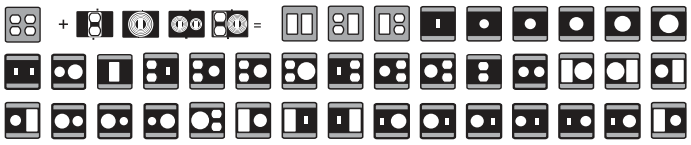

Multiple combinations of duplex, GFCI, switch and rounds: 1-3/8″, 1-5/8″, 1-3/4″, 2-1/4″, 2-5/8″

MM7440C

MM7440G

In-Use Covers

Catalog #	Description	Depth	Color	Pkg. Type	Std. Pkg.	Barcode
2-Gang In-Use Covers						
MM2420C	Extra Duty® 55-in-1 Standard	2.75″	Clear	Shrink	6	IIIIIIII
MM2420G	Extra Duty® 55-in-1 Standard	2.75″	Gray	Shrink	4	IIIIIIII
MM2410C	55-in-1 Standard	2.75″	Clear	Shrink	6	IIIIIIII
MM2410G	55-in-1 Standard	2.75″	Gray	Shrink	6	IIIIIIII
2-Gang In-Use Jumbo Covers						
MM7420C	Extra Duty® 55-in-1 Jumbo	5.00″	Clear	Shrink	3	IIIIIIII
MM7420G	Extra Duty® 55-in-1 Jumbo	5.00″	Gray	Shrink	3	IIIIIIII
MM7440C	40-in-1 Jumbo	4.75″	Clear	Shrink	3	IIIIIIII
MM7440G	40-in-1 Jumbo	4.75″	Gray	Shrink	3	IIIIIIII

See end of section (Pg C25) for detailed drawings »

Non-Metallic Flat Device Covers

1-Gang

Applications

- For use whenever weatherproof protection is required for an outdoor receptacle or switch

Product Features

- High-impact polycarbonate construction provides maximum durability
- Quick-Fit keyhole mounting system allows installation in under a minute
- Includes attached gasket and mounting hardware
- Universal Fit Adapter System Technology (U-Fast) comes pre-configured for GFCI
- Lockable tab (fits up to 1/8" shackle

Compliance

- c UL us File E116141
- 2020 NEC® 406.9 (A) compliant
- NEMA 3R rated

MM110C

MM110G

MM110W

16-in-1 Configurations

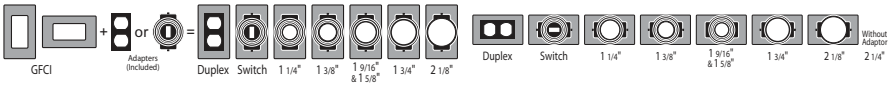

2-Gang

MM1410C

MM1410G

MM1410W

55-in-1 Configurations

Multiple combinations of duplex, GFCI, switch and rounds: 1-1/4", 1-3/8", 1-9/16", 1-5/8", 1-11/16", 1-3/4", 2-1/8", 2-1/4", 2-7/16"

Flat Covers

Catalog #	Description	Depth	Color	Pkg. Type	Std. Pkg.	Barcode
1-Gang Flat Covers						
MM110C	Horizontal/Vertical 16-in-1	.625"	Clear	Shrink	10	IIIIIIII
MM110G	Horizontal/Vertical 16-in-1	.625"	Gray	Shrink	10	IIIIIIII
MM110W	Horizontal/Vertical 16-in-1	.625"	White	Shrink	10	IIIIIIII
2-Gang Flat Covers						
MM1410C	55-in-1	.625"	Clear	Shrink	10	IIIIIIII
MM1410G	55-in-1	.625"	Gray	Shrink	10	IIIIIIII
MM1410W	55-in-1	.625"	White	Shrink	10	IIIIIIII

See end of section (Pg C25) for detailed drawings »

Non-Metallic Low-Profile Expandable In-Use Covers

1-Gang

Applications

- Expandable design for weather-proof protection while an outlet is in use

Product Features

- Revolutionary patented design expands from 1″ to 3″ for in-use needs
- 100% paintable surface
- Ultra rugged polycarbonate & synthetic neoprene rubber will not dry rot, crack or deteriorate in sunlight
- Includes attached gasket and mounting hardware
- Quick-Fit keyhole mounting system allows installation in under a minute
- Universal Fit Adapter System Technology (U-Fast) comes pre-configured for GFCI

Compliance

- c UL us File E116141
- 2020 NEC® 406.9 (A) compliant
- 2020 NEC® 406.9 (B) compliant (Extra Duty)
- NEMA 3R rated

ML500G

ML500W

ML500Z

ML450G

ML450W

ML450Z

In Use

Cut-Away View

Low profile design expands out for weatherproof protection of outlets and plugs while in use.

16-in-1 Configurations

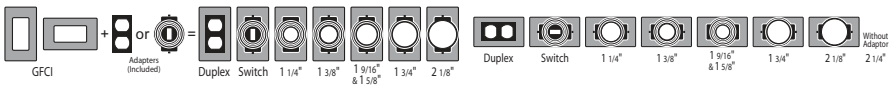

ML2500G

ML2450G

55-in-1 Configurations

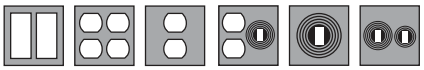

Multiple combinations of duplex, GFCI, switch and rounds: 1-1/4″, 1-3/8″, 1-9/16″, 1-5/8″, 1-11/16″, 2-1/8″, 2-1/4″, 2-7/16″

Low-Profile Expandable In-Use Covers

Catalog #	Description	Depth	Color	Pkg. Type	Std. Pkg.	Barcode
1-Gang Low-Profile Expandable In-Use Covers						
ML500G	Extra Duty® 16-in-1 Low-Profile Expandable Vertical/Horizontal	1″ to 3″	Gray	Shrink	10	IIIIIIII
ML500W	Extra Duty® 16-in-1 Low-Profile Expandable Vertical/Horizontal	1″ to 3″	White	Shrink	10	IIIIIIII
ML500Z	Extra Duty® 16-in-1 Low-Profile Expandable Vertical/Horizontal	1″ to 3″	Bronze	Shrink	10	IIIIIIII
ML450G	16-in-1 Low-Profile Expandable Vertical/Horizontal	1″ to 3″	Gray	Shrink	10	IIIIIIII
ML450W	16-in-1 Low-Profile Expandable Vertical/Horizontal	1″ to 3″	White	Shrink	10	IIIIIIII
ML450Z	16-in-1 Low-Profile Expandable Vertical/Horizontal	1″ to 3″	Bronze	Shrink	10	IIIIIIII
2-Gang Low-Profile Expandable In-Use Covers						
ML2500G	Extra Duty® 55-in-1 Low-Profile Expandable	1″ to 3″	Gray	Shrink	6	IIIIIIII
ML2450G	55-in-1 Low-Profile Expandable	1″ to 3″	Gray	Shrink	6	IIIIIIII

See end of section (Pg C26) for detailed drawings »

Non-Metallic Flat Profile In-Use Recessed Enclosure

1-Gang Cover

Applications

- In-use weatherproof enclosures can be used in new or old work, and are compatible with common siding types and materials such as vinyl, wood, stucco, brick or block

Product Features

- Mounts horizontally or vertically
- Accommodates duplex, GFCI or round receptacle (not included)
- Universal Fit Adapter System Technology (U-Fast) comes pre-configured for GFCI
- Electrical box and siding flange included
- For all common siding types and materials (vinyl, wood, stucco, brick or block)
- Installation instructions and mounting hardware included

Compliance

- c UL us File E116141
- 2020 NEC® 406.9 (A) compliant
- 2020 NEC® 406.9 (B) compliant (Extra Duty)

EXTRA DUTY

MR420CG

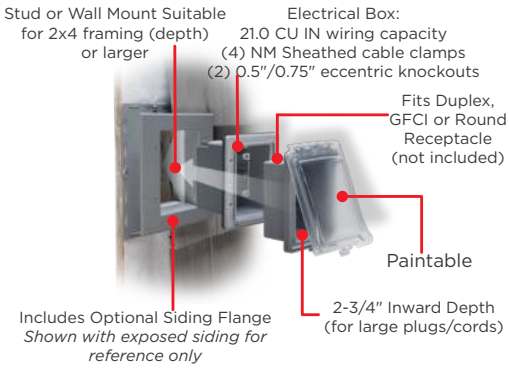

6-in-1

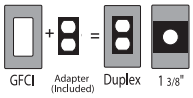

MR420CW

MR420CZ

Compatible with Range of Siding Materials

Vinyl Siding

Brick

Stucco

Weatherproof In-Use Recessed Enclosure

Catalog #	Description	Depth	Color	Pkg. Type	Std. Pkg.	Barcode
MR420CG	Extra Duty® Weatherproof In-Use Recessed Enclosure	4.98"	Gray	Boxed	4	IIIIIIII
MR420CW	Extra Duty® Weatherproof In-Use Recessed Enclosure	4.98"	White	Boxed	4	IIIIIIII
MR420CZ	Extra Duty® Weatherproof In-Use Recessed Enclosure	4.98"	Bronze	Boxed	4	IIIIIIII

See end of section (Pg C26) for detailed drawings »

Outdoor Deck Outlet Covers

1-Gang Cover and Kit

Applications

- Provides safe, code-compliant way to add an outlet to raised outdoor floors
- Suitable for lights, fans, device chargers and other electric appliances
- Protects from rain or snow and overspray from sprinklers or hoses
- Cost effective upgrade for today's outdoor living

Product Features

- Provides convenient power access on raised wood or composite decks and porches
- Low profile design meets ADA standards, includes beveled edge and slip-resistant texture
- Heavy duty UV-resistant polycarbonate for durability even in harsh environments
- Cord hooks hold two power cords in place, including most 16 gauge grounded extension cords
- Fits standard duplex, decorator and GFCI receptacles
- Rain chamber and "drip loop" design provide two levels of in-use protection
- Pre-attached weatherproof gasket keeps water from entering around the self-closing lid

Compliance

- Listed
- NEC & NEMA 3R Compliant

Outdoor Comforts™
Enhance Your Outdoor Space!

DOCK320 kits also include outdoor box, gasket and GFCI receptacle

DOC320G DOCK320G

DOC320W DOCK320W

DOC320Z DOCK320Z

Weatherproof Deck Outlet

Catalog #	Description	Surface Area	Color	Pkg. Type	Std. Pkg.	Bar Code
Weatherproof Deck Outlet Cover						
DOC320G	Recessed Outlet Enclosure and Cover for Raised Decks	7" x 8.375"	Gray	Box	4	IIIIIIII
DOC320W	Recessed Outlet Enclosure and Cover for Raised Decks	7" x 8.375"	White	Box	4	IIIIIIII
DOC320Z	Recessed Outlet Enclosure and Cover for Raised Decks	7" x 8.375"	Bronze	Box	4	IIIIIIII
Weatherproof Deck Outlet Kit						
DOCK320G	Deck Outlet Cover, 1-Gang metallic outlet box & Hubbell Pro GFCI	7" x 8.375"	Gray	Box	4	IIIIIIII
DOCK320W	Deck Outlet Cover, 1-Gang metallic outlet box & Hubbell Pro GFCI	7" x 8.375"	White	Box	4	IIIIIIII
DOCK320Z	Deck Outlet Cover, 1-Gang metallic outlet box & Hubbell Pro GFCI	7" x 8.375"	Bronze	Box	4	IIIIIIII

See end of section (Pg C27) for detailed drawings »

Outdoor Freestanding Post Device Enclosures

ParkPost Outdoor Power Enclosure

Applications

- Direct-bury freestanding post is a stylish solution for plug-in power access in yards and other outdoor living spaces such as patios, spas, outdoor kitchens, shade structures, fire pits and more
- Convenient means to have power outlets positioned away from a home or building or near structures if an exterior wall mounted device and cover is not ideal or practical

Product Features

- Ideal for prominent locations rather than hidden away like typical outdoor boxes & covers
- Unique slide cover design provides easy access to outlets and retains stylish appearance even with cords plugged in
- Accommodates two power cords including most 16-gauge grounded extension cords
- Base models include adapters to install standard duplex, decorator, GFCI, or single round receptacle
- Kit models include Hubbell tamper-resistant weather-resistant 15A GFCI receptacle

Compliance

- File E527572
- NEC® Compliant
- NEMA 3R Rated

GFCI included with kits

PP55G, PP55GG

PP55W, PP55GW

PP55Z, PP55GZ

Outdoor Freestanding Post Device Enclosures

Catalog #	Description	Color	Pkg. Type	Std. Pkg.	Barcode
Direct-bury Freestanding Post Enclosure					
PP55G	ParkPost Outdoor Power Enclosure	Gray	Box	2	|||||
PP55W	ParkPost Outdoor Power Enclosure	White	Box	2	|||||
PP55Z	ParkPost Outdoor Power Enclosure	Bronze	Box	2	|||||
Direct-bury Freestanding Post Enclosure Kits					
PP55GG	ParkPost Outdoor Power Enclosure with TR/WR 15A Hubbell GFCI	Gray	Box	2	|||||
PP55GW	ParkPost Outdoor Power Enclosure with TR/WR 15A Hubbell GFCI	White	Box	2	|||||
PP55GZ	ParkPost Outdoor Power Enclosure with TR/WR 15A Hubbell GFCI	Bronze	Box	2	|||||

Non-Metallic Receptacle / Cover Combos and Complete Kits

In-Use Cover Combos and Complete Kits

Applications

- Receptacle and cover combos for use whenever weatherproof protection is required while receptacle is in use

Product Features

- High quality Hubbell WR/TR device included
- Quick-Fit keyhole mounting system allows cover installation in under a minute
- Universal Fit Adapter System Technology (U-Fast) comes pre-configured for GFCI
- Includes attached gasket and hardware
- Lockable tab fits full-size padlock (up to 1/4" shackle)
- Installation instructions and mounting hardware included

Compliance

- File E313240
- 2020 NEC® 406.9 (A) compliant
- 2020 NEC® 406.9 (B) compliant (Extra Duty)
- NEMA 3R rated

CODEGUARD®

Weatherproof confidence with the latest code compliant, Extra-Duty TayMac covers and weather-resistant, tamper-resistant Hubbell Pro receptacles in one package.

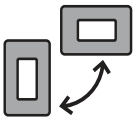

Horizontal or Vertical Mount

MG420CS

MG420C-20

MKG420CS

Receptacle / In-Use Cover Combos

Catalog #	Description	Depth	Color	Pkg. Type	Std. Pkg.	Barcode
MG420CS	Extra Duty® Hubbell WR/TR 15A Self-Test GFCI / Cover Combo	2.75"	Clear	Shrink	4	IIIIIIII
MG420C-20	Extra Duty® Hubbell WR/TR 20A Self-Test GFCI / Cover Combo	2.75"	Clear	Shrink	4	IIIIIIII
MKG420CS	Extra Duty® In-Use Cover, Box and Hubbell WR/TR 15A Self-Test GFCI Kit	2.75"	Clear	Shrink	4	IIIIIIII

See end of section (Pg C27-C28) for detailed drawings »

Receptacle / Metal Cover Combos and Complete Kits

In-Use Metal Cover Combos and Complete Kits

Applications

- Receptacle and metal cover combos for use whenever weatherproof protection is required

Product Features

- High quality Hubbell WR/TR device included
- Heavy duty die-cast metal construction
- Includes gasket and mounting hardware
- Durable powder coat finish
- Lockable tab fits full-size padlock
- Includes receptacle and cover

Compliance

- UL File E313240
- 2020 NEC® 406.9 (B) compliant (Extra Duty)
- NEMA 3R rated

CODEGUARD®
Weatherproof confidence with the latest code compliant, Extra-Duty TayMac metal covers and weather-resistant, tamper-resistant Hubbell receptacles in one package.

MD5802-0

MKG4280SS

Receptacle / Metal In-Use Cover Combos

Catalog #	Description	Depth	Color	Pkg. Type	Std. Pkg.	Barcode
MD5802-0	Extra Duty® Hubbell WR/TR 15A Duplex / Horizontal In-Use Metal Cover Combo	3″	Gray	Shrink	3	IIIIIIII

Complete Metal In-Use Cover Kits

Catalog #	Description	Depth	Color	Pkg. Type	Std. Pkg.	Barcode
MKG4280SS	Extra Duty® In-Use Cover, Box and Hubbell WR/TR 15A Self-Test GFCI	2″ to 3.5″	Gray	Clamshell	4	IIIIIIII

See end of section (Pg C28) for detailed drawings »

Metal In-Use Covers

RaynGuard® In-Use Metal Covers

Applications

- Designed to provide weatherproof protection while an outlet is in use

Product Features

- Heavy duty die-cast metal construction
- Meets or exceeds Extra Duty® specifications
- Quick-Fit keyhole mounting system allows cover installation in under a minute
- Includes gasket and mounting hardware
- Universal Fit Adapter System Technology (U-Fast) comes pre-configured for GFCI
- Durable powder coat finish
- All RaynGuard® covers include integrated cord catch with rain chamber for splash protection
- Lockable tab fits full-size padlock (up to 9/32″ shackle)

Compliance

- c UL us File E212332
- 2020 NEC® compliant
- NEMA 3R rated

EXTRA DUTY

MX3200

EXTRA DUTY

MX3300

8-in-1 Configurations

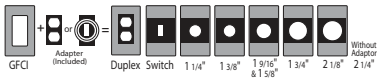

8-in-1 Configurations

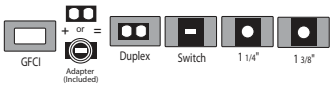

EXTRA DUTY

MX6200

MX7200

55-in-1 Configurations

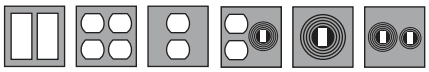

Multiple combinations of duplex, GFCI, switch and rounds: 1-1/4″, 1-3/8″, 1-9/16″, 1-5/8″, 1-11/16″, 2-1/8″, 2-1/4″, 2-7/16″

Metal In-Use Covers

Catalog #	Description	Depth	Color	Pkg. Type	Std. Pkg.	Barcode
MX3200	Extra Duty® Vertical 8-in-1	3.125″	Gray	Shrink	4	IIIIIIII
MX3300	Extra Duty® Horizontal 8-in-1	3.5″	Gray	Shrink	4	IIIIIIII
MX6200	Extra Duty® 2-Gang 55-in-1	3.5″	Gray	Shrink	4	IIIIIIII
MX7200	Extra Duty® Jumbo 2-Gang 55-in-1	5.125″	Gray	Shrink	2	IIIIIIII

See end of section (Pg C29) for detailed drawings »

Metal Low Profile In-Use Covers

In-Use Low-Profile Expandable Metal Covers

Applications

- Designed to provide weatherproof protection while an outlet is in use

Product Features

- Heavy duty die-cast metal construction
- Meets or exceeds Extra Duty® specifications
- Quick-Fit keyhole mounting system allows cover installation in under a minute
- Includes gasket and mounting hardware
- Universal Fit Adapter System Technology (U-Fast) comes pre-configured for GFCI
- Durable powder coat finish
- Lockable open or closed and fits full-size padlock (up to 5/16" shackle)

Compliance

- c UL us File E212332
- 2020 NEC® compliant
- NEMA 3R rated

EXTRA DUTY. Expands 2" to 3-1/2"

MX4280S MX4280WH MX4280Z

8-in-1 Configurations

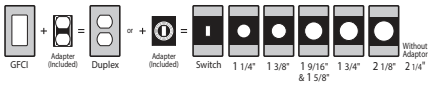

EXTRA DUTY. Expands 2" to 3-1/2"

MX4380S

8-in-1 Configurations

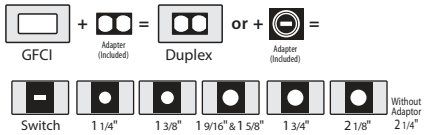

EXTRA DUTY. Expands 2-1/2" to 4-1/2"

MX5280S

8-in-1 Configurations

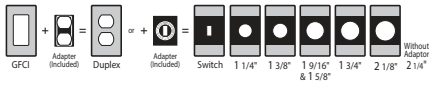

EXTRA DUTY. Expands 2" to 3-1/2"

MX7280S

55-in-1 Configurations

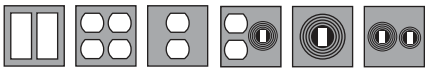

Multiple combinations of duplex, GFCI, switch and rounds: 1-1/4", 1-3/8", 1-9/16", 1-5/8", 1-11/16", 2-1/8", 2-1/4", 2-7/16"

Metal Low Profile In-Use Covers

Catalog #	Description	Depth	Color	Pkg. Type	Std. Pkg.	Barcode
MX4280S	Extra Duty® Vertical 8-in-1	2" to 3-1/2"	Gray	Shrink	6	IIIIIIII
MX4280WH	Extra Duty® Vertical 8-in-1	2" to 3-1/2"	White	Shrink	6	IIIIIIII
MX4280Z	Extra Duty® Vertical 8-in-1	2" to 3-1/2"	Bronze	Shrink	6	IIIIIIII
MX4380S	Extra Duty® Horizontal 8-in-1	2" to 3-1/2"	Gray	Shrink	4	IIIIIIII
MX5280S	Extra Duty® Vertical Deep 8-in-1	2-1/2" to 4-1/2"	Gray	Shrink	2	IIIIIIII
MX7280S	Extra Duty® Vertical 2-Gang 55-in-1	2" to 3-1/2"	Gray	Shrink	2	IIIIIIII

See end of section (Pg C29) for detailed drawings »

Applications

- Use to install outdoor device cover on round 1-gang box
- Compatible with all 1-gang TayMac in-use covers as well as any BELL flip covers or other brands that use device mounting holes to install cover
- Compatible round boxes need 3-1/4″ screw spacing to support NEMA device mount hole configuration.
- Covers up to 3-3/4″ round box opening and includes attached gasket for weatherproof seal

PRBA400G
(Round box not included)

Round Box Adapter

Catalog #	Description	Color	Pkg. Type	Std. Pkg.	Barcode
PRBA400G	Round Box Weatherproof Device Cover Adapter Plate	Gray	Shrink	10	IIIIIIII

See end of section (Pg C29) for detailed drawings »

Rigid/IMC Conduit Bodies

Applications

- For use with threaded Rigid/IMC conduit for pulling access or to split a run into multiple directions. Removable cover included with complete assemblies allow access for maintenance and making taps and splices to conductors.

Product Features

- Durable die-cast aluminum construction
- Premium powder coat finish
- Complete assemblies include a NBR synthetic rubber gasket and a stamped aluminum cover with combination head screws

Compliance

- File E212332
- 2020 NEC® compliant
- NEMA 3R rated

RLB050 - RLB400

LB050 - LB400

RLC050 - RLC400

RLL050 - RLL400

LL050 - LL400

RC050 - RC400

Threaded Conduit Fittings

Catalog #	Description	Unit Ctn Qty	Ship Ctn Qty	Bar Code
LB Assembly				
RLB050	1/2" Rigid LB Assembly	-	10	IIIIIIIII
RLB075	3/4" Rigid LB Assembly	-	10	IIIIIIIII
RLB100	1" Rigid LB Assembly	-	5	IIIIIIIII
RLB125	1-1/4" Rigid LB Assembly	-	2	IIIIIIIII
RLB150	1-1/2" Rigid LB Assembly	-	2	IIIIIIIII
RLB200	2" Rigid LB Assembly	-	2	IIIIIIIII
RLB250	2-1/2" Rigid LB Assembly	-	1	IIIIIIIII
RLB300	3" Rigid LB Assembly	-	1	IIIIIIIII
RLB350	3-1/2" Rigid LB Assembly	-	1	IIIIIIIII
RLB400	4" Rigid LB Assembly	-	1	IIIIIIIII
LB Body				
LB050	1/2" Rigid LB Type Body	10	100	IIIIIIIII
LB075	3/4" Rigid LB Type Body	10	50	IIIIIIIII
LB100	1" Rigid LB Type Body	5	25	IIIIIIIII
LB125	1-1/4" Rigid LB Type Body	2	10	IIIIIIIII
LB150	1-1/2" Rigid LB Type Body	2	10	IIIIIIIII
LB200	2" Rigid LB Type Body	1	5	IIIIIIIII
LB250	2-1/2" Rigid LB Type Body	-	1	IIIIIIIII
LB300	3" Rigid LB Type Body	-	1	IIIIIIIII
LB350	3-1/2" Rigid LB Type Body	-	1	IIIIIIIII
LB400	4" Rigid LB Type Body	-	1	IIIIIIIII
C Assembly				
RLC050	1/2" Rigid C Assembly	-	5	IIIIIIIII
RLC075	3/4" Rigid C Assembly	-	5	IIIIIIIII
RLC100	1" Rigid C Assembly	-	5	IIIIIIIII
RLC125	1-1/4" Rigid C Assembly	-	2	IIIIIIIII
RLC150	1-1/2" Rigid C Assembly	-	2	IIIIIIIII
RLC200	2" Rigid C Assembly	-	2	IIIIIIIII
RLC250	2-1/2" Rigid C Assembly	-	1	IIIIIIIII
RLC300	3" Rigid C Assembly	-	1	IIIIIIIII
RLC350	3-1/2" Rigid C Assembly	-	1	IIIIIIIII
RLC400	4" Rigid C Assembly	-	1	IIIIIIIII

Threaded Conduit Fittings

Catalog #	Description	Unit Ctn Qty	Ship Ctn Qty	Bar Code
C Body				
RC050	1/2" Rigid C Type Body	10	100	IIIIIIIII
RC075	3/4" Rigid C Type Body	10	50	IIIIIIIII
RC100	1" Rigid C Type Body	5	25	IIIIIIIII
RC125	1-1/4" Rigid C Type Body	2	10	IIIIIIIII
RC150	1-1/2" Rigid C Type Body	2	10	IIIIIIIII
RC200	2" Rigid C Type Body	1	5	IIIIIIIII
RC250	2-1/2" Rigid C Type Body	-	1	IIIIIIIII
RC300	3" Rigid C Type Body	-	1	IIIIIIIII
RC350	3-1/2" Rigid C Type Body	-	1	IIIIIIIII
RC400	4" Rigid C Type Body	-	1	IIIIIIIII
LL Assembly				
RLL050	1/2" Rigid LL Assembly	-	5	IIIIIIIII
RLL075	3/4" Rigid LL Assembly	-	5	IIIIIIIII
RLL100	1" Rigid LL Assembly	-	5	IIIIIIIII
RLL125	1-1/4" Rigid LL Assembly	-	2	IIIIIIIII
RLL150	1-1/2" Rigid LL Assembly	-	2	IIIIIIIII
RLL200	2" Rigid LL Assembly	-	2	IIIIIIIII
RLL250	2-1/2" Rigid LL Assembly	-	1	IIIIIIIII
RLL300	3" Rigid LL Assembly	-	1	IIIIIIIII
RLL350	3-1/2" Rigid LL Assembly	-	1	IIIIIIIII
RLL400	4" Rigid LL Assembly	-	1	IIIIIIIII
LL Body				
LL050	1/2" Rigid LL Type Body	10	100	IIIIIIIII
LL075	3/4" Rigid LL Type Body	10	50	IIIIIIIII
LL0100	1" Rigid LL Type Body	5	25	IIIIIIIII
LL125	1-1/4" Rigid LL Type Body	2	10	IIIIIIIII
LL150	1-1/2" Rigid LL Type Body	2	10	IIIIIIIII
LL200	2" Rigid LL Type Body	1	5	IIIIIIIII
LL250	2-1/2" Rigid LL Type Body	-	1	IIIIIIIII
LL300	3" Rigid LL Type Body	-	1	IIIIIIIII
LL350	3-1/2" Rigid LL Type Body	-	1	IIIIIIIII
LL400	4" Rigid LL Type Body	-	1	IIIIIIIII

See end of section (Pg C30-C31)) for detailed drawings »

Rigid/IMC Conduit Bodies

Applications

- For use with threaded Rigid/IMC conduit for pulling access or to split a run into multiple directions. Removable cover included with complete assemblies allow access for maintenance and making taps and splices to conductors.

RLR050 - RLR400

LR050 - LR400

RSLB050 - RSLB200

Product Features

- Durable die-cast aluminum construction
- Premium powder coat finish
- Complete assemblies include a NBR synthetic rubber gasket and a stamped aluminum cover with combination head screws

RLT050 - RLT400

T050 - T400

Compliance

- c UL us File E212332
- 2020 NEC® compliant
- NEMA 3R rated

Threaded Conduit Fittings

Catalog #	Description	Unit Ctn Qty	Ship Ctn Qty	Bar Code
LR Assembly				
RLR050	1/2" Rigid LR Assembly	-	5	IIIIIIIII
RLR075	3/4" Rigid LR Assembly	-	5	IIIIIIIII
RLR100	1" Rigid LR Assembly	-	5	IIIIIIIII
RLR125	1-1/4" Rigid LR Assembly	-	2	IIIIIIIII
RLR150	1-1/2" Rigid LR Assembly	-	2	IIIIIIIII
RLR200	2" Rigid LR Assembly	-	2	IIIIIIIII
RLR250	2-1/2" Rigid LR Assembly	-	1	IIIIIIIII
RLR300	3" Rigid LR Assembly	-	1	IIIIIIIII
RLR350	3-1/2" Rigid LR Assembly	-	1	IIIIIIIII
RLR400	4" Rigid LR Assembly	-	1	IIIIIIIII
LR Body				
LR050	1/2" Rigid LR Type Body	10	100	IIIIIIIII
LR075	3/4" Rigid LR Type Body	10	50	IIIIIIIII
LR0100	1" Rigid LR Type Body	5	25	IIIIIIIII
LR125	1-1/4" Rigid LR Type Body	2	10	IIIIIIIII
LR150	1-1/2" Rigid LR Type Body	2	10	IIIIIIIII
LR200	2" Rigid LR Type Body	1	5	IIIIIIIII
LR250	2-1/2" Rigid LR Type Body	-	1	IIIIIIIII
LR300	3" Rigid LR Type Body	-	1	IIIIIIIII
LR350	3-1/2" Rigid LR Type Body	-	1	IIIIIIIII
LR400	4" Rigid LR Type Body	-	1	IIIIIIIII

See end of section (Pg C31-C32) for detailed drawings »

Threaded Conduit Fittings

Catalog #	Description	Unit Ctn Qty	Ship Ctn Qty	Bar Code
T Assembly				
RLT050	1/2" Rigid T Assembly	-	5	IIIIIIIII
RLT075	3/4" Rigid T Assembly	-	5	IIIIIIIII
RLT100	1" Rigid T Assembly	-	5	IIIIIIIII
RLT125	1-1/4" Rigid T Assembly	-	2	IIIIIIIII
RLT150	1-1/2" Rigid T Assembly	-	2	IIIIIIIII
RLT200	2" Rigid T Assembly	-	2	IIIIIIIII
RLT250	2-1/2" Rigid T Assembly	-	1	IIIIIIIII
RLT300	3" Rigid T Assembly	-	1	IIIIIIIII
RLT350	3-1/2" Rigid T Assembly	-	1	IIIIIIIII
RLT400	4" Rigid T Assembly	-	1	IIIIIIIII
T Body				
T050	1/2" Rigid T Type Body	10	100	IIIIIIIII
T075	3/4" Rigid T Type Body	10	50	IIIIIIIII
T100	1" Rigid T Type Body	5	25	IIIIIIIII
T125	1-1/4" Rigid T Type Body	2	10	IIIIIIIII
T150	1-1/2" Rigid T Type Body	2	10	IIIIIIIII
T200	2" Rigid T Type Body	-	2	IIIIIIIII
T250	2-1/2" Rigid T Type Body	-	1	IIIIIIIII
T300	3" Rigid T Type Body	-	1	IIIIIIIII
T350	3-1/2" Rigid T Type Body	-	1	IIIIIIIII
T400	4" Rigid T Type Body	-	1	IIIIIIIII
Threaded Service Entrance Elbow				
RSLB050	1/2" Rigid SLB	-	10	IIIIIIIII
RSLB075	3/4" Rigid SLB	-	5	IIIIIIIII
RSLB100	1" Rigid SLB	-	3	IIIIIIIII
RSLB125	1-1/4" Rigid SLB	-	2	IIIIIIIII
RSLB150	1-1/2" Rigid SLB	-	2	IIIIIIIII
RSLB200	2" Rigid SLB	-	2	IIIIIIIII

EMT Conduit Bodies

Applications

- For use with EMT conduit for pulling access or to split a run into multiple directions. Removable cover included with complete assemblies allow access for maintenance and making taps and splices to conductors.

Product Features

- Durable die-cast aluminum construction
- Premium powder coat finish
- Combination head set screws
- Complete assemblies include a NBR synthetic rubber gasket and a stamped aluminum cover with combination head screws

Compliance

- File E212332
- 2020 NEC® compliant
- NEMA 3R rated

EALB050 - EALB400

ELB050 - ELB400

EAC050 - EAC400

EALL050 - EALL400

ELL050 - ELL400

EC050 - EC400

EMT Conduit Fittings

Catalog #	Description	Unit Ctn Qty	Ship Ctn Qty	Bar Code
EMT Conduit Fittings: LB Assembly				
EALB050	1/2" EMT LB Assembly	10	100	IIIIIIIII
EALB075	3/4" EMT LB Assembly	10	50	IIIIIIIII
EALB100	1" EMT LB Assembly	5	25	IIIIIIIII
EALB125	1-1/4" EMT LB Assembly	2	10	IIIIIIIII
EALB150	1-1/2" EMT LB Assembly	2	10	IIIIIIIII
EALB200	2" EMT LB Assembly	1	5	IIIIIIIII
EALB250	2-1/2" EMT LB Assembly	-	1	IIIIIIIII
EALB300	3" EMT LB Assembly	-	1	IIIIIIIII
EALB350	3-1/2" EMT LB Assembly	-	1	IIIIIIIII
EALB400	4" EMT LB Assembly	-	1	IIIIIIIII
LB Body				
ELB050	1/2" EMT LB Type Body	10	100	IIIIIIIII
ELB075	3/4" EMT LB Type Body	10	50	IIIIIIIII
ELB100	1" EMT LB Type Body	5	25	IIIIIIIII
ELB125	1-1/4" EMT LB Type Body	2	10	IIIIIIIII
ELB150	1-1/2" EMT LB Type Body	2	10	IIIIIIIII
ELB200	2" EMT LB Type Body	1	5	IIIIIIIII
ELB250	2-1/2" EMT LB Type Body	-	1	IIIIIIIII
ELB300	3" EMT LB Type Body	-	1	IIIIIIIII
ELB350	3-1/2" EMT LB Type Body	-	1	IIIIIIIII
ELB400	4" EMT LB Type Body	-	1	IIIIIIIII
C Assembly				
EAC050	1/2" EMT C Assembly	10	100	IIIIIIIII
EAC075	3/4" EMT C Assembly	5	50	IIIIIIIII
EAC100	1" EMT C Assembly	5	25	IIIIIIIII
EAC125	1-1/4" EMT C Assembly	5	25	IIIIIIIII
EAC150	1-1/2" EMT C Assembly	5	10	IIIIIIIII
EAC200	2" EMT C Assembly	1	5	IIIIIIIII
EAC250	2-1/2" EMT C Assembly	-	1	IIIIIIIII
EAC300	3" EMT C Assembly	-	1	IIIIIIIII
EAC350	3-1/2" EMT C Assembly	-	1	IIIIIIIII
EAC400	4" EMT C Assembly	-	1	IIIIIIIII

EMT Conduit Fittings

Catalog #	Description	Unit Ctn Qty	Ship Ctn Qty	Bar Code
C Body				
EC050	1/2" EMT C Type Body	10	100	IIIIIIIII
EC075	3/4" EMT C Type Body	10	50	IIIIIIIII
EC100	1" EMT C Type Body	5	25	IIIIIIIII
EC125	1-1/4" EMT C Type Body	2	10	IIIIIIIII
EC150	1-1/2" EMT C Type Body	2	10	IIIIIIIII
EC200	2" EMT C Type Body	1	5	IIIIIIIII
EC250	2-1/2" EMT C Type Body	-	1	IIIIIIIII
EC300	3" EMT C Type Body	-	1	IIIIIIIII
EC350	3-1/2" EMT C Type Body	-	1	IIIIIIIII
EC400	4" EMT C Type Body	-	1	IIIIIIIII
LL Assembly				
EALL050	1/2" EMT LL Assembly	10	100	IIIIIIIII
EALL075	3/4" EMT LL Assembly	5	50	IIIIIIIII
EALL100	1" EMT LL Assembly	5	25	IIIIIIIII
EALL125	1-1/4" EMT LL Assembly	2	10	IIIIIIIII
EALL150	1-1/2" EMT LL Assembly	2	10	IIIIIIIII
EALL200	2" EMT LL Assembly	1	5	IIIIIIIII
EALL250	2-1/2" EMT LL Assembly	-	1	IIIIIIIII
EALL300	3" EMT LL Assembly	-	1	IIIIIIIII
EALL350	3-1/2" EMT LL Assembly	-	1	IIIIIIIII
EALL400	4" EMT LL Assembly	-	1	IIIIIIIII
LL Body				
ELL050	1/2" EMT LL Type Body	10	100	IIIIIIIII
ELL075	3/4" EMT LL Type Body	10	50	IIIIIIIII
ELL100	1" EMT LL Type Body	5	25	IIIIIIIII
ELL125	1-1/4" EMT LL Type Body	2	10	IIIIIIIII
ELL150	1-1/2" EMT LL Type Body	2	10	IIIIIIIII
ELL200	2" EMT LL Type Body	1	5	IIIIIIIII
ELL250	2-1/2" EMT LL Type Body	-	1	IIIIIIIII
ELL300	3" EMT LL Type Body	-	1	IIIIIIIII
ELL350	3-1/2" EMT LL Type Body	-	1	IIIIIIIII
ELL400	4" EMT LL Type Body	-	1	IIIIIIIII

See end of section (Pg C32-C35)) for detailed drawings »

EMT Conduit Bodies

Applications

- For use with EMT conduit for pulling access or to split a run into multiple directions. Removable cover included with complete assemblies allow access for maintenance and making taps and splices to conductors.

Product Features

- Durable die-cast aluminum construction
- Premium powder coat finish
- Combination head set screws
- Complete assemblies include a NBR synthetic rubber gasket and a stamped aluminum cover with combination head screws

Compliance

- File E212332
- 2020 NEC® compliant
- NEMA 3R rated

EALR050 - EALR400

ELR050 - ELR400

EAT050 - EAT400

ET050 - ET400

EMT Conduit Fittings

Catalog #	Description	Unit Ctn Qty	Ship Ctn Qty	Bar Code
LR Assembly				
EALR050	1/2" EMT LR Assembly	10	100	IIIIIIIII
EALR075	3/4" EMT LR Assembly	5	10	IIIIIIIII
EALR100	1" EMT LR Assembly	5	25	IIIIIIIII
EALR125	1-1/4" EMT LR Assembly	2	10	IIIIIIIII
EALR150	1-1/2" EMT LR Assembly	2	10	IIIIIIIII
EALR200	2" EMT LR Assembly	1	5	IIIIIIIII
EALR250	2-1/2" EMT LR Assembly	-	1	IIIIIIIII
EALR300	3" EMT LR Assembly	-	1	IIIIIIIII
EALR350	3-1/2" EMT LR Assembly	-	1	IIIIIIIII
EALR400	4" EMT LR Assembly	-	1	IIIIIIIII
LR Body				
ELR050	1/2" EMT LR Type Body	10	100	IIIIIIIII
ELR075	3/4" EMT LR Type Body	10	50	IIIIIIIII
ELR100	1" EMT LR Type Body	5	25	IIIIIIIII
ELR125	1-1/4" EMT LR Type Body	2	10	IIIIIIIII
ELR150	1-1/2" EMT LR Type Body	2	10	IIIIIIIII
ELR200	2" EMT LR Type Body	1	5	IIIIIIIII
ELR250	2-1/2" EMT LR Type Body	-	1	IIIIIIIII
ELR300	3" EMT LR Type Body	-	1	IIIIIIIII
ELR350	3-1/2" EMT LR Type Body	-	1	IIIIIIIII
ELR400	4" EMT LR Type Body	-	1	IIIIIIIII

EMT Conduit Fittings

Catalog #	Description	Unit Ctn Qty	Ship Ctn Qty	Bar Code
T Assembly				
EAT050	1/2" EMT T Assembly	10	50	IIIIIIIII
EAT075	3/4" EMT T Assembly	10	50	IIIIIIIII
EAT100	1" EMT T Assembly	5	25	IIIIIIIII
EAT125	1-1/4" EMT T Assembly	2	10	IIIIIIIII
EAT150	1-1/2" EMT T Assembly	2	10	IIIIIIIII
EAT200	2" EMT T Assembly	-	2	IIIIIIIII
EAT250	2-1/2" EMT T Assembly	-	1	IIIIIIIII
EAT300	3" EMT T Assembly	-	1	IIIIIIIII
EAT350	3-1/2" EMT T Assembly	-	1	IIIIIIIII
EAT400	4" EMT T Assembly	-	1	IIIIIIIII
T Body				
ET050	1/2" EMT T Type Body	10	100	IIIIIIIII
ET075	3/4" EMT T Type Body	10	50	IIIIIIIII
ET100	1" EMT T Type Body	5	25	IIIIIIIII
ET125	1-1/4" EMT T Type Body	2	10	IIIIIIIII
ET150	1-1/2" EMT T Type Body	2	10	IIIIIIIII
ET200	2" EMT T Type Body	-	2	IIIIIIIII
ET250	2-1/2" EMT T Type Body	-	1	IIIIIIIII
ET300	3" EMT T Type Body	-	1	IIIIIIIII
ET350	3-1/2" EMT T Type Body	-	1	IIIIIIIII
ET400	4" EMT T Type Body	-	1	IIIIIIIII

See end of section (Pg C35-C38) for detailed drawings »

Combo (Rigid/IMC or EMT) Bodies

Applications

- For use with threaded Rigid/IMC or EMT conduit for pulling access or to split a run into multiple directions. Removable cover included with complete assemblies allow access for maintenance and making taps and splices to conductors.

Product Features

- Durable die-cast aluminum construction
- Premium powder coat finish
- Combination head set screws
- Complete assemblies include a NBR synthetic rubber gasket and a stamped aluminum cover with combination head screws

Compliance

- File E212332
- 2020 NEC® compliant
- NEMA 3R rated

COLB050 - COLB200

CLB050 - CLB200

COC050 - COC200

CC050 - CC200

Combo Conduit Fittings

Catalog #	Description	Unit Ctn Qty	Ship Ctn Qty	Bar Code
LB Assembly				
COLB050	1/2" Combo LB Assembly	10	100	IIIIIIIII
COLB075	3/4" Combo LB Assembly	10	50	IIIIIIIII
COLB100	1" Combo LB Assembly	5	25	IIIIIIIII
COLB125	1-1/4" Combo LB Assembly	2	10	IIIIIIIII
COLB150	1-1/2" Combo LB Assembly	2	10	IIIIIIIII
COLB200	2" Combo LB Assembly	-	5	IIIIIIIII
LB Body				
CLB050	1/2" Combo LB Type Body	10	100	IIIIIIIII
CLB075	3/4" Combo LB Type Body	10	50	IIIIIIIII
CLB100	1" Combo LB Type Body	5	25	IIIIIIIII
CLB125	1-1/4" Combo LB Type Body	2	10	IIIIIIIII
CLB150	1-1/2" Combo LB Type Body	2	10	IIIIIIIII
CLB200	2" Combo LB Type Body	-	5	IIIIIIIII

Combo Conduit Fittings

Catalog #	Description	Unit Ctn Qty	Ship Ctn Qty	Bar Code
C Assembly				
COC050	1/2" Combo C Assembly	10	100	IIIIIIIII
COC075	3/4" Combo C Assembly	10	50	IIIIIIIII
COC100	1" Combo C Assembly	5	25	IIIIIIIII
COC125	1-1/4" Combo C Assembly	2	10	IIIIIIIII
COC150	1-1/2" Combo C Assembly	2	10	IIIIIIIII
COC200	2" Combo C Assembly	-	5	IIIIIIIII
C Body				
CC050	1/2" Combo C Type Body	10	100	IIIIIIIII
CC075	3/4" Combo C Type Body	10	50	IIIIIIIII
CC0100	1" Combo C Type Body	5	25	IIIIIIIII
CC0125	1-1/4" Combo C Type Body	2	10	IIIIIIIII
CC150	1-1/2" Combo C Type Body	2	10	IIIIIIIII
CC200	2" Combo C Type Body	-	5	IIIIIIIII

See end of section (Pg C36-C39) for detailed drawings »

Combo (Rigid/IMC or EMT) Bodies

Applications

- For use with threaded rigid/IMC or EMT for pulling access or to split a run into multiple directions. Removable cover included with complete assemblies allow access for maintenance and making taps and splices to conductors.

Product Features

- Durable die-cast aluminum construction
- Premium powder coat finish
- Combination head set screws
- Complete assemblies include a NBR synthetic rubber gasket and a stamped aluminum cover with combination head screws

Compliance

- c UL us File E212332
- 2020 NEC® compliant
- NEMA 3R rated

COLL050 - COLL200

CLL050 - CLL200

COLR050 - COLR200

COT050 - COT200

CT050 - CT200

CLR050 - CLR200

Combo Conduit Fittings

Catalog #	Description	Unit Ctn Qty	Ship Ctn Qty	Bar Code
LL Assembly				
COLL050	1/2" Combo LL Assembly	10	100	IIIIIIIII
COLL075	3/4" Combo LL Assembly	10	50	IIIIIIIII
COLL100	1" Combo LL Assembly	5	25	IIIIIIIII
COLL125	1-1/4" Combo LL Assembly	2	10	IIIIIIIII
COLL150	1-1/2" Combo LL Assembly	2	10	IIIIIIIII
COLL200	2" Combo LL Assembly	-	5	IIIIIIIII
LL Body				
CLL050	1/2" Combo LL Type Body	10	100	
CLL075	3/4" Combo LL Type Body	10	50	
CLL100	1" Combo LL Type Body	5	25	
CLL125	1-1/4" Combo LL Type Body	2	10	
CLL150	1-1/2" Combo LL Type Body	2	10	
CLL200	2" Combo LL Type Body	-	5	
LR Assembly				
COLR050	1/2" Combo LR Assembly	10	100	
COLR075	3/4" Combo LR Assembly	10	50	
COLR100	1" Combo LR Assembly	5	25	
COLR125	1-1/4" Combo LR Assembly	2	10	
COLR150	1-1/2" Combo LR Assembly	2	10	
COLR200	2" Combo LR Assembly	-	5	

Combo Conduit Fittings

Catalog #	Description	Unit Ctn Qty	Ship Ctn Qty	Bar Code
LR Body				
CLR050	1/2" Combo LR Type Body	10	100	
CLR075	3/4" Combo LR Type Body	10	50	
CLR100	1" Combo LR Type Body	5	25	
CLR125	1-1/4" Combo LR Type Body	2	10	
CLR150	1-1/2" Combo LR Type Body	2	10	
CLR200	2" Combo LR Type Body	-	5	
T Assembly				
COT050	1/2" Combo T Assembly	10	100	
COT075	3/4" Combo T Assembly	10	50	
COT100	1" Combo T Assembly	5	25	
COT125	1-1/4" Combo T Assembly	2	10	
COT150	1-1/2" Combo T Assembly	2	10	
COT200	2" Combo T Assembly	-	5	
T Body				
CT050	1/2" Combo T Type Body	10	100	
CT075	3/4" Combo T Type Body	10	50	
CT100	1" Combo T Type Body	5	25	
CT125	1-1/4" Combo T Type Body	2	10	
CT150	1-1/2" Combo T Type Body	2	10	
CT200	2" Combo T Type Body	-	5	

See end of section (Pg C37-C42) for detailed drawings »

Conduit Body Covers

Applications

- For use with TayMac threaded Rigid/ IMC, EMT, or Combo conduit bodies.

Product Features

- Covers made of durable stamped steel or aluminum construction
- Retained combination head screws included with covers
- Gasket made of NBR synthetic rubber

Compliance

- File E212332
- 2020 NEC® compliant
- NEMA 3R rated

SSC050 - SSC400
Stamped Steel Cover

CSC050 - CSC400
Stamped Aluminum Cover

CRG050 - CRG400
Rubber Gasket

Conduit Body Covers

Catalog #	Description	Unit Ctn Qty	Ship Ctn Qty	Bar Code
Stamped Steel				
SSC050	1/2" Stamped Steel Cover	25	250	IIIIIIII
SSC075	3/4" Stamped Steel Cover	25	250	IIIIIIII
SSC100	1" Stamped Steel Cover	10	100	IIIIIIII
SSC125	1-1/4" Stamped Steel Cover	-	25	IIIIIIII
SSC150	1-1/2" Stamped Steel Cover	-	25	IIIIIIII
SSC200	2" Stamped Steel Cover	-	25	IIIIIIII
SSC250	2-1/2" Stamped Steel Cover	-	10	IIIIIIII
SSC300	3" Stamped Steel Cover	-	10	IIIIIIII
SSC350	3-1/2" Stamped Steel Cover	-	5	IIIIIIII
SSC400	4" Stamped Steel Cover	-	5	IIIIIIII
Stamped Aluminum				
CSC050	1/2" Stamped Alum. Cover	-	100	IIIIIIII
CSC075	3/4" Stamped Alum. Cover	-	100	IIIIIIII
CSC100	1" Stamped Alum. Cover	-	50	IIIIIIII
CSC125	1-1/4" Stamped Alum. Cover	-	50	IIIIIIII
CSC150	1-1/2" Stamped Alum. Cover	-	25	IIIIIIII
CSC200	2" Stamped Alum. Cover	-	10	IIIIIIII
CSC250	2-1/2" Stamped Alum. Cover	-	10	IIIIIIII
CSC300	3" Stamped Alum. Cover	-	10	IIIIIIII
CSC350	3-1/2" Stamped Alum. Cover	-	10	IIIIIIII
CSC400	4" Stamped Alum. Cover	-	10	IIIIIIII

Conduit Body Gaskets

Catalog #	Description	Unit Ctn Qty	Ship Ctn Qty	Bar Code
CRG050	1/2" Rubber Gasket	-	500	IIIIIIII
CRG075	3/4" Rubber Gasket	-	500	IIIIIIII
CRG100	1" Rubber Gasket	-	500	IIIIIIII
CRG125	1-1/4" Rubber Gasket	-	200	IIIIIIII
CRG150	1-1/2" Rubber Gasket	-	200	IIIIIIII
CRG200	2" Rubber Gasket	-	100	IIIIIIII
CRG250	2-1/2" Rubber Gasket	-	50	IIIIIIII
CRG300	3" Rubber Gasket	-	50	IIIIIIII
CRG350	3-1/2" Rubber Gasket	-	50	IIIIIIII
CRG400	4" Rubber Gasket	-	50	IIIIIIII

See end of section (Pg C43) for detailed drawings »

Detailed Drawings

Non-Metallic In-Use Covers

MM420

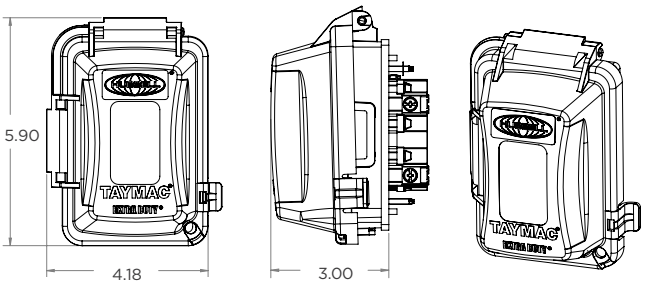

MM720

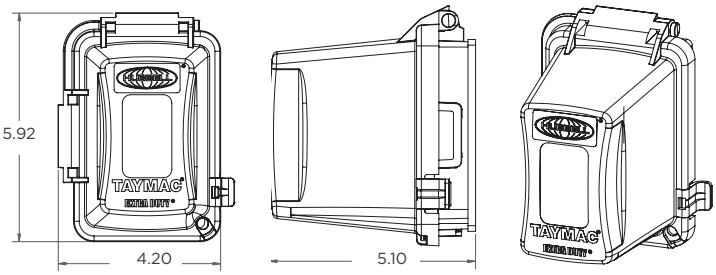

MM410

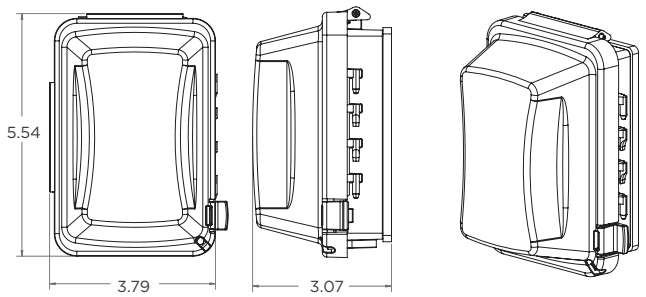

MM410CA (While-In-Use Cover with Round Box Adapter Plate)

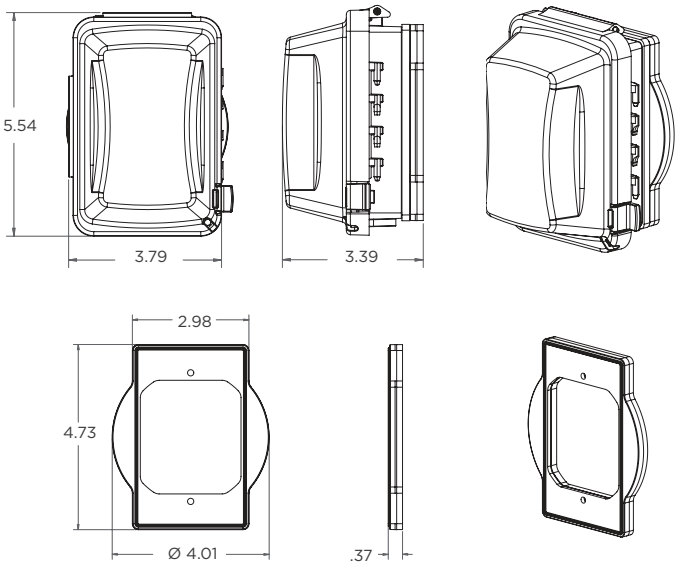

MM510

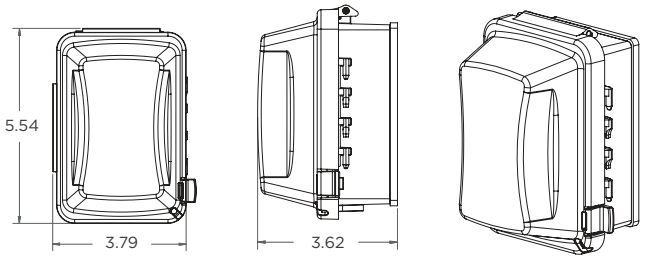

MM710

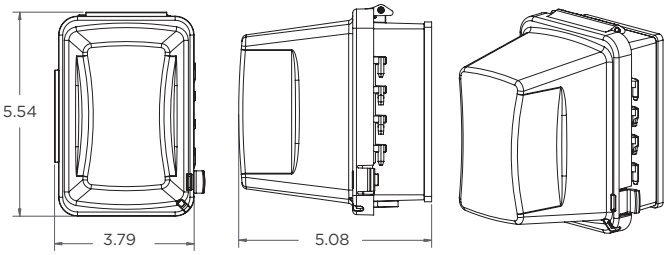

See end of section (Pg C40) for detailed drawings »

Non-Metallic Covers

MM2420

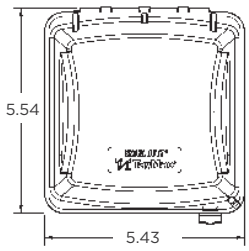

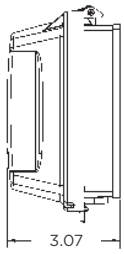

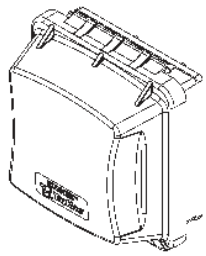

MM7420

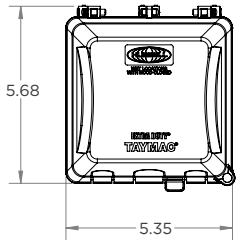

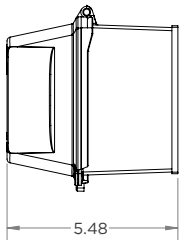

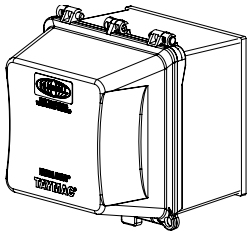

MM7440

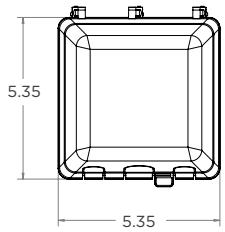

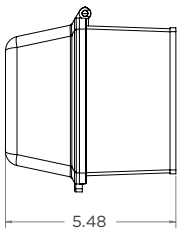

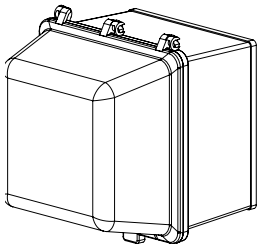

MM2410

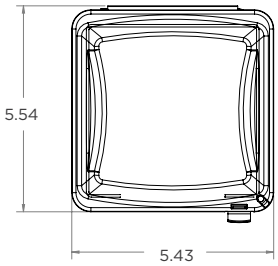

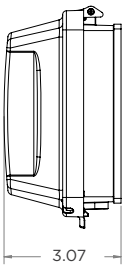

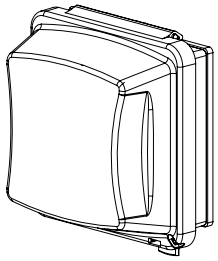

MM110

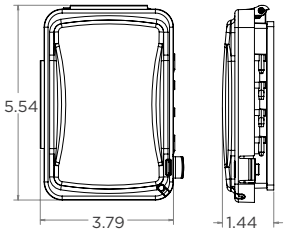

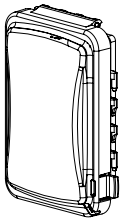

MM1410

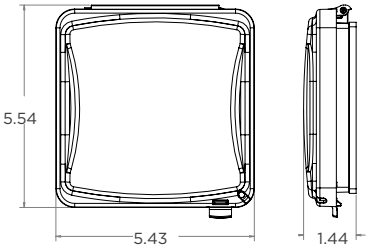

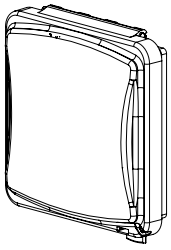

Detailed Drawings

Low Profile In-Use Covers

ML500

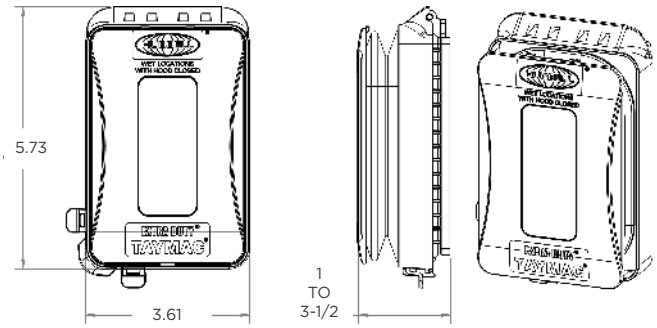

ML450

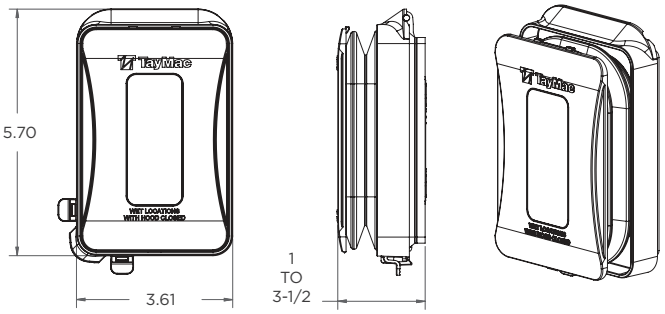

ML2500

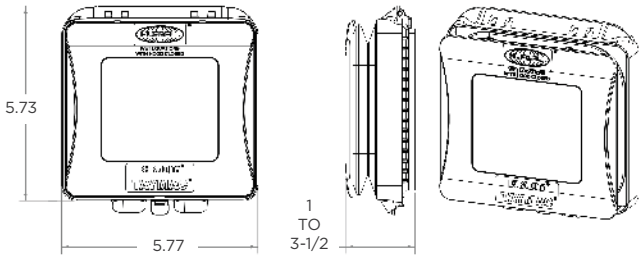

ML2450

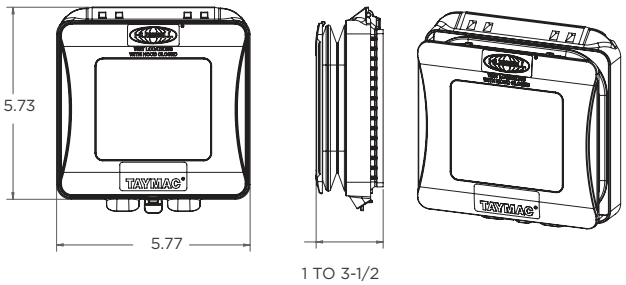

MR420

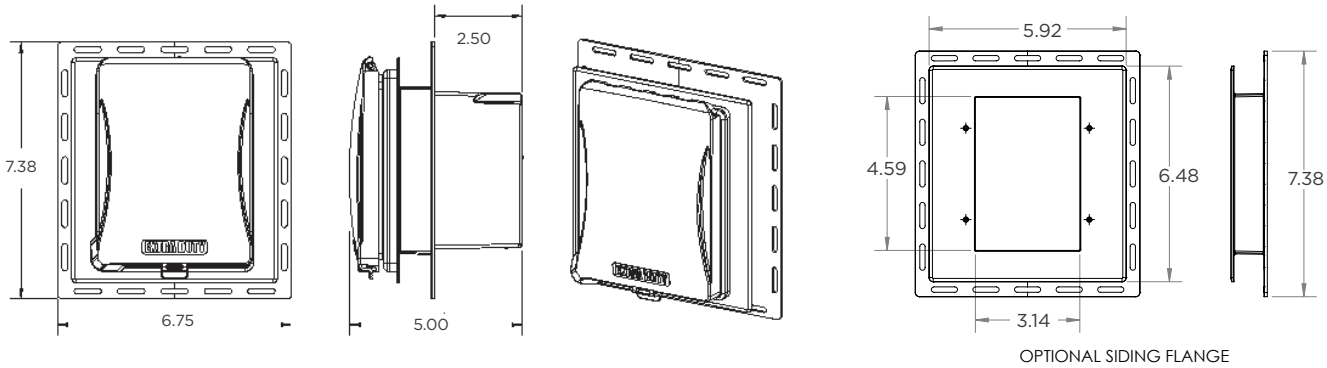

Outdoor Outlet Covers

DOC320

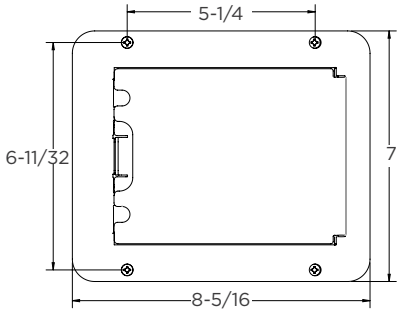

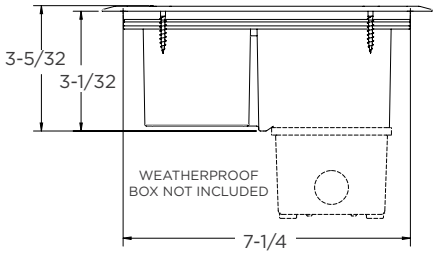

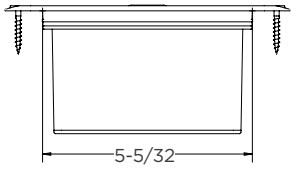

DOCK320

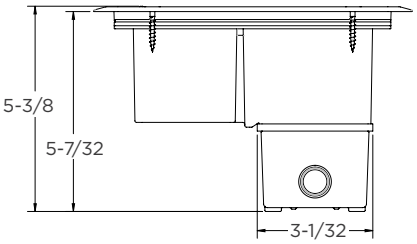

In-Use Cover Combos

MG420CS / MG420C-20

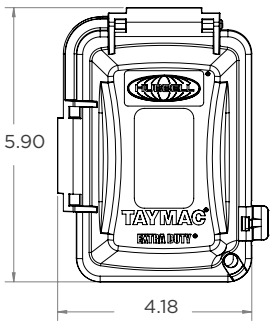

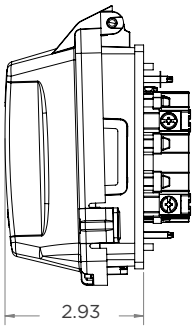

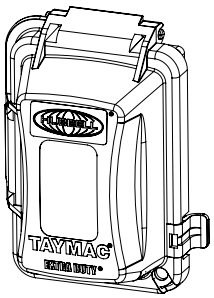

Detailed Drawings

In-Use Cover Complete Kits

MKG420CS

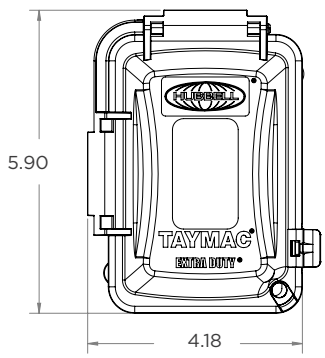

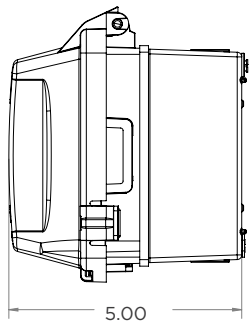

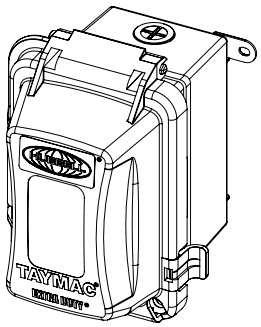

Metal In-Use Cover Combos

MD5802-0

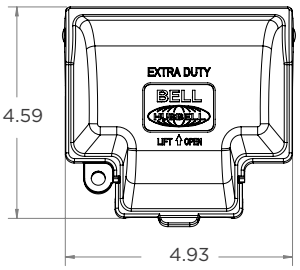

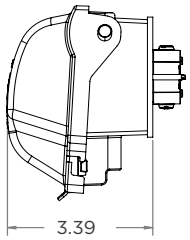

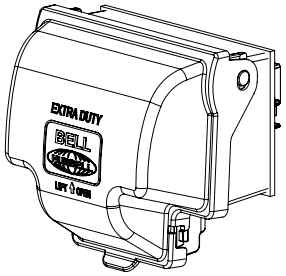

MKG4280SS

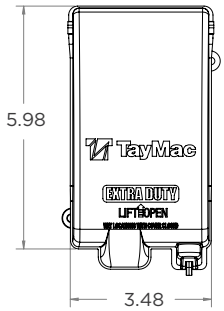

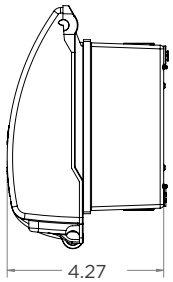

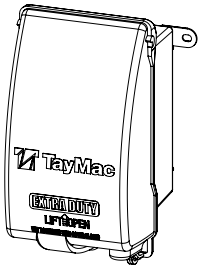

Metal In-Use Covers

MX3200

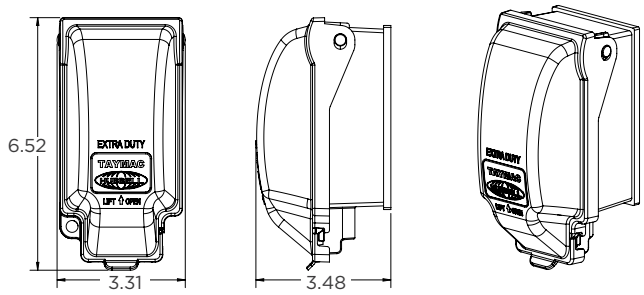

MX3300

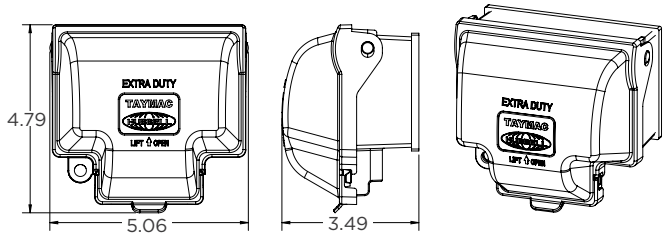

MX6200

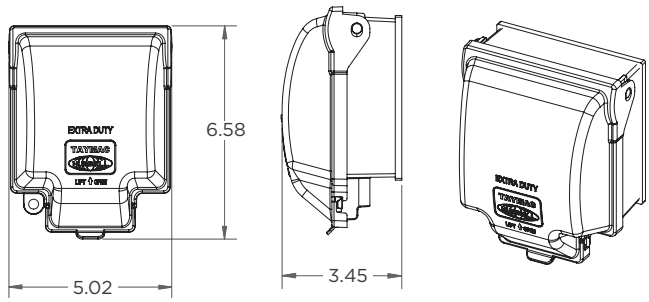

MX7200

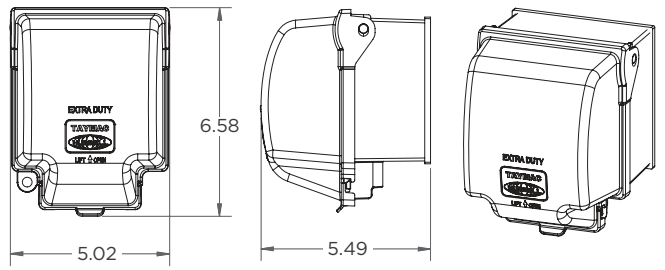

MX4280S

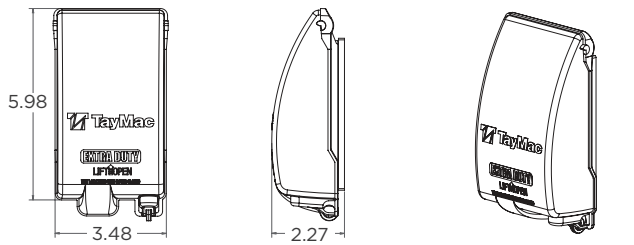

MX4380S

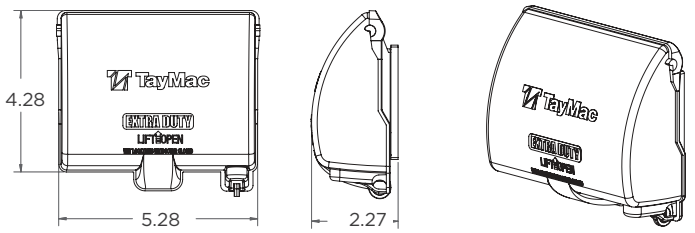

MX5280S

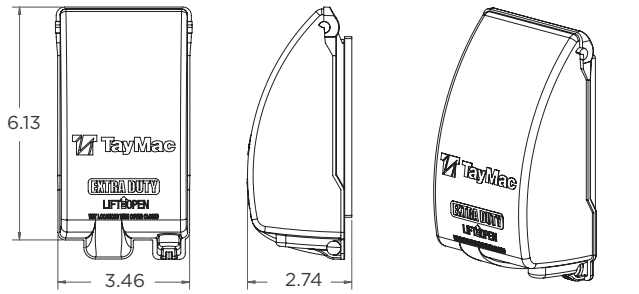

MX7280S

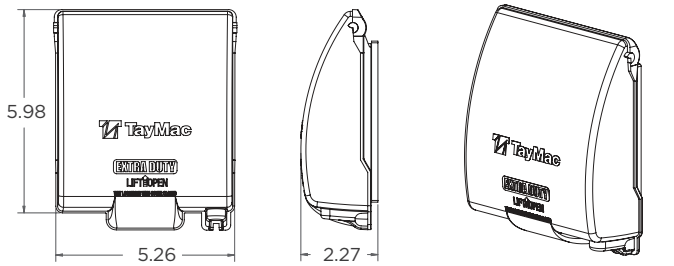

Detailed Drawings

Accessories

PRBA400G

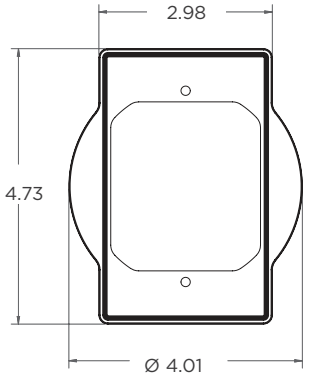

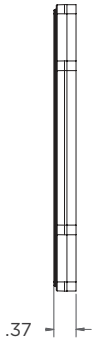

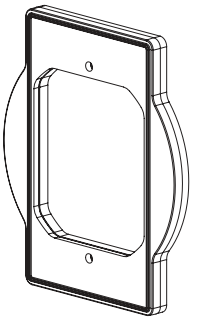

Conduit Bodies

RLB/LB

Trade Size	Catalog Number	A	B	C	D ± 0.010 [.25]	E Tapped Holes	F NPT Thread	G Throat Dia +0/-0.020[0.51]	Volume	Maximum Wire Fill
1/2"	RLB050	4.31	1.34	2.09	3.500	#8-32UNC-2B	1/2"-14NPT	0.612	4.3 CU.IN	
		109.5	34.0	53.1	88.90			15.54	70 CC	
3/4"	RLB075	5.08	1.56	2.39	4.125	#8-32UNC-2B	3/4"-14NPT	0.814	7.3 CU.IN	3 # 6 AWG MAX
		129.0	39.6	60.7	104.78			20.68	119 CC	
1"	RLB100	5.92	1.82	2.78	4.830	#8-32UNC-2B	1"-11 1/2NPT	1.039	12.0 CU.IN	3 # 4 AWG MAX
		150.4	46.2	70.6	122.68			26.39	196 CC	
1-1/4"	RLB125	7.82	2.51	3.52	6.500	#12-24UNC-2B	1-1/4"-11 1/2NPT	1.370	32.3 CU.IN	3 # 2 AWG MAX
		198.6	63.8	89.4	165.10			34.80	529 CC	
1-1/2"	RLB150	7.82	2.51	3.52	6.500	#12-24UNC-2B	1-1/2"-11 1/2NPT	1.600	34.2 CU.IN	3 # 2 AWG MAX
		198.6	63.8	89.4	165.10			40.64	560 CC	
2"	RLB200	10.05	3.19	4.51	8.562	#12-24UNC-2B	2"-11 1/2NPT	2.057	71.4 CU.IN	3 # 2/0 MAX
		255.3	81.0	114.6	217.47			52.25	1170 CC	
2-1/2"	RLB250	12.83	4.49	5.31	11.250	5/16"-18 UNC-2B	2-1/2"-8NPT	2.459	157.4 CU.IN	3 # 4/0 MAX
		325.9	114.0	134.9	285.75			62.46	2579 CC	
3"	RLB300	12.83	4.49	5.91	11.250	5/16"-18 UNC-2B	3"-8NPT	3.058	179.8 CU.IN	3 # 250 MAX
		325.9	114.0	150.1	285.75			77.67	2946 CC	
3-1/2"	RLB350	15.65	5.55	7.09	13.687	5/16"-18 UNC-2B	3-1/2"-8NPT	3.538	323.0 CU.IN	3 # 250 MAX
		397.5	141.0	180.1	347.65			89.87	5293 CC	
4"	RLB400	15.65	5.55	7.09	13.687	5/16"-18 UNC-2B	4"-8NPT	4.016	323.0 CU.IN	3 # 250 MAX
		397.5	141.0	180.1	347.65			102.01	5293 CC	

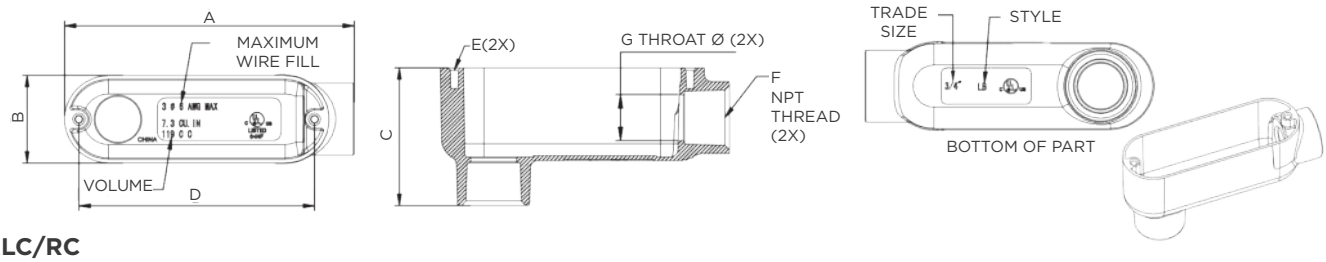

RLC/RC

Trade Size	Catalog Number	A	B	C	D ± 0.010 [.25]	E Tapped Holes	F NPT Thread	G Throat Dia +0/-0.020[0.51]	Volume	Maximum Wire Fill
1/2"	RLC050	4.72	1.34	1.36	3.500	#8-32UNC-2B	1/2"-14NPT	0.612	4.3 CU.IN	
		119.9	34.0	34.5	88.90			15.54	70 CC	
3/4"	RLC075	5.51	1.56	1.63	4.125	#8-32UNC-2B	3/4"-14NPT	0.814	7.3 CU.IN	3 # 6 AWG MAX
		140.0	39.6	41.3	104.78			20.68	119 CC	
1"	RLC100	6.46	1.82	1.89	4.830	#8-32UNC-2B	1"-11 1/2NPT	1.039	12.0 CU.IN	3 # 4 AWG MAX
		164.1	46.2	48.0	122.68			26.39	196 CC	
1-1/4"	RLC125	8.35	2.51	2.50	6.500	#12-24UNC-2B	1-1/4"-11 1/2NPT	1.370	32.3 CU.IN	3 # 2 AWG MAX
		212.1	63.8	63.5	165.10			34.80	529 CC	
1-1/2"	RLC150	8.35	2.51	2.50	6.500	#12-24UNC-2B	1-1/2"-11 1/2NPT	1.600	34.2 CU.IN	3 # 2 AWG MAX
		212.1	63.8	63.5	165.10			40.64	560 CC	
2"	RLC200	10.55	3.19	3.41	8.562	#12-24UNC-2B	2"-11 1/2NPT	2.057	71.4 CU.IN	3 # 2/0 MAX
		268.0	81.0	86.6	217.47			52.25	1170 CC	
2-1/2"	RLC250	13.46	4.49	3.98	11.250	5/16"-18 UNC-2B	2-1/2"-8NPT	2.459	157.4 CU.IN	3 # 4/0 MAX
		341.9	114.0	101.1	285.75			62.46	2579 CC	
3"	RLC300	13.46	4.49	4.53	11.250	5/16"-18 UNC-2B	3"-8NPT	3.058	179.8 CU.IN	3 # 250 MAX
		341.9	114.0	115.1	285.75			77.67	2946 CC	
3-1/2"	RLC350	16.30	5.55	5.59	13.687	5/16"-18 UNC-2B	3-1/2"-8NPT	3.538	323.0 CU.IN	3 # 250 MAX
		414.0	141.0	142.0	347.65			89.87	5293 CC	
4"	RLC400	16.30	5.55	5.59	13.687	5/16"-18 UNC-2B	4"-8NPT	4.016	323.0 CU.IN	3 # 250 MAX
		414.0	141.0	142.0	347.65			102.01	5293 CC	

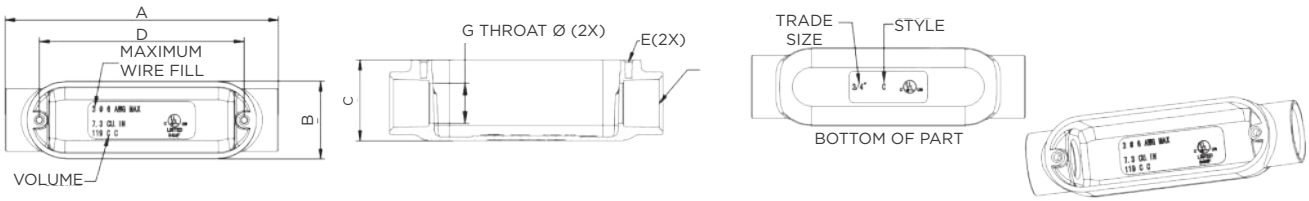

Detailed Drawings

Accessories

RLL/LL

Trade Size	Catalog Number	A	B	C	D	E ± 0.010 [.25]	F Tapped Holes	G NPT Thread	H Throat Dia +0/-0.020 [0.51]	Volume	Maximum Wire Fill
1/2"	RLL050	4.31	2.03	1.36	1.34	3.500	#8-32UNC-2B	1/2"-14NPT	0.612	4.3 CU.IN	
		109.5	51.6	34.5	34.0	88.90			15.54	70 CC	
3/4"	RLL075	5.08	2.30	1.63	1.56	4.125	#8-32UNC-2B	3/4"-14NPT	0.814	7.3 CU.IN	3 # 6 AWG
		129.0	58.4	41.3	39.6	104.78			20.68	119 CC	MAX
1"	RLL100	5.92	2.68	1.89	1.82	4.830	#8-32UNC-2B	1"-11 1/2NPT	1.039	12.0 CU.IN	3 # 4 AWG
		150.4	68.1	48.0	46.2	122.68			26.39	196 CC	MAX
1-1/4"	RLL125	7.82	3.52	2.50	2.51	6.500	#12-24UNC-2B	1-1/4"-11 1/2NPT	1.370	32.3 CU.IN	3 # 2 AWG
		198.6	89.4	63.5	63.8	165.10			34.80	529 CC	MAX
1-1/2"	RLL150	7.82	3.52	2.50	2.51	6.500	#12-24UNC-2B	1-1/2"-11 1/2NPT	1.600	34.2 CU.IN	3 # 2 AWG
		198.6	89.4	63.5	63.8	165.10			40.64	560 CC	MAX
2"	RLL200	10.05	4.27	3.41	3.19	8.562	#12-24UNC-2B	2"-11 1/2NPT	2.057	71.4 CU.IN	3 # 2/0
		255.3	108.5	86.6	81.0	217.47			52.25	1170 CC	MAX
2-1/2"	RLL250	12.83	5.89	3.98	4.49	11.250	5/16"-18 UNC-2B	2-1/2"-8NPT	2.459	157.4 CU.IN	3 # 4/0
		325.9	149.6	101.1	114.0	285.75			62.46	2579 CC	MAX
3"	RLL300	12.83	5.89	4.53	4.49	11.250	5/16"-18 UNC-2B	3"-8NPT	3.058	179.8 CU.IN	3 # 250
		325.9	149.6	115.1	114.0	285.75			77.67	2946 CC	MAX
3-1/2"	RLL350	15.65	7.66	5.59	5.55	13.687	5/16"-18 UNC-2B	3-1/2"-8NPT	3.538	323.0 CU.IN	3 # 250
		397.5	194.6	142.0	141.0	347.65			89.87	5293 CC	MAX
4"	RLL400	15.65	7.66	5.59	5.55	13.687	5/16"-18 UNC-2B	4"-8NPT	4.016	323.0 CU.IN	3 # 250
		397.5	194.6	142.0	141.0	347.65			102.01	5293 CC	MAX

RLB/RLC/RLL/RLR/RLT (Cover Plate)

Trade Size	A	B	C	D ± 0.02	E	F	G
1/2"	3.900	1.340	0.070	3.500	2.890	0.827	0.181
	99.1	34.0	1.8	88.90	73.4	21.0	4.6
3/4"	4.665	1.535	0.070	4.126	3.426	0.886	0.181
	118.5	39.0	1.8	104.8	88.0	22.5	4.6
1"	5.374	1.732	0.070	4.831	4.291	1.398	0.181
	136.5	44.0	1.8	122.7	109.0	35.5	4.6
1-1/4"	7.283	2.500	0.070	6.500	5.827	1.437	0.181
	185.0	63.5	1.8	165.10	148.0	36.5	4.6
1-1/2"	7.283	2.500	0.070	6.500	5.827	1.437	0.181
	185.0	63.5	1.8	165.10	148.0	36.5	4.6
2"	9.488	3.150	0.070	8.563	7.539	1.732	0.181
	241.0	80.0	1.8	217.5	191.5	44.0	4.6
2-1/2"	12.205	4.528	0.098	11.25	10.236	2.362	0.197
	310.0	115.0	2.5	285.8	260.0	60.0	5.0
3"	12.205	4.528	0.098	11.25	10.236	2.362	0.197
	310.0	115.0	2.5	285.8	260.0	60.0	5.0
3-1/2"	14.961	5.512	0.098	13.69	12.598	2.992	0.197
	380.0	140.0	2.5	347.6	320.0	76.0	5.0
4"	14.961	5.512	0.098	13.685	12.598	2.992	0.197
	380.0	140.0	2.5	347.6	320.0	76.0	5.0

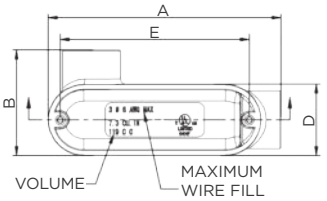

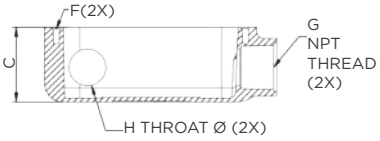

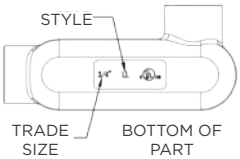

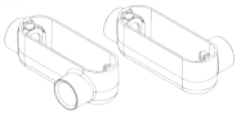

RLR/LR

Trade Size	Catalog Number	A	B	C	D	E ± 0.010 [.25]	F Tapped Holes	G NPT Thread	H Throat Dia +0/-0.020[0.51]	Volume	Maximum Wire Fill
1/2"	RLR050	4.31	2.03	1.36	1.34	3.500	#8-32UNC-2B	1/2"-14NPT	0.612	4.3 CU.IN	
		109.5	51.6	34.5	34.0	88.90			15.54	70 CC	
3/4"	RLR075	5.08	2.30	1.63	1.56	4.125	#8-32UNC-2B	3/4"-14NPT	0.814	7.3 CU.IN	3 # 6 AWG
		129.0	58.4	41.3	39.6	104.78			20.68	119 CC	MAX
1"	RLR100	5.92	2.68	1.89	1.82	4.830	#8-32UNC-2B	1"-11 1/2NPT	1.039	12.0 CU.IN	3 # 4 AWG
		150.4	68.1	48.0	46.2	122.68			26.39	196 CC	MAX
1-1/4"	RLR125	7.82	3.52	2.50	2.51	6.500	#12-24UNC-2B	1-1/4"-11 1/2NPT	1.370	32.3 CU.IN	3 # 2 AWG
		198.6	89.4	63.5	63.8	165.10			34.80	529 CC	MAX
1-1/2"	RLR150	7.82	3.52	2.50	2.51	6.500	#12-24UNC-2B	1-1/2"-11 1/2NPT	1.600	34.2 CU.IN	3 # 2 AWG
		198.6	89.4	63.5	63.8	165.10			40.64	560 CC	MAX
2"	RLR200	10.05	4.27	3.41	3.19	8.562	#12-24UNC-2B	2"-11 1/2NPT	2.057	71.4 CU.IN	3 # 2/0 MAX
		255.3	108.5	86.6	81.0	217.47			52.25	1170 CC	
2-1/2"	RLR250	12.83	5.89	3.98	4.49	11.250	5/16"-18 UNC-2B	2-1/2"-8NPT	2.459	157.4 CU.IN	3 # 4/0
		325.9	149.6	101.1	114.0	285.75			62.46	2579 CC	MAX
3"	RLR300	12.83	5.89	4.53	4.49	11.250	5/16"-18 UNC-2B	3"-8NPT	3.058	179.8 CU.IN	3 # 250
		325.9	149.6	115.1	114.0	285.75			77.67	2946 CC	MAX
3-1/2"	RLR350	15.65	7.66	5.59	5.55	13.687	5/16"-18 UNC-2B	3-1/2"-8NPT	3.538	323.0 CU.IN	3 # 250
		397.5	194.6	142.0	141.0	347.65			89.87	5293 CC	MAX
4"	RLR400	15.65	7.66	5.59	5.55	13.687	5/16"-18 UNC-2B	4"-8NPT	4.016	323.0 CU.IN	3 # 250
		397.5	194.6	142.0	141.0	347.65			102.01	5293 CC	MAX

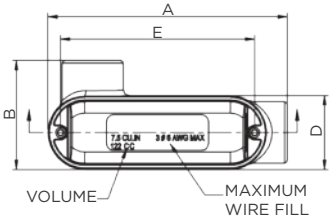

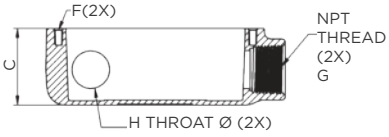

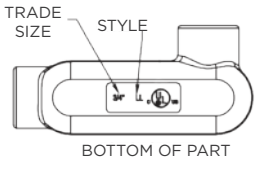

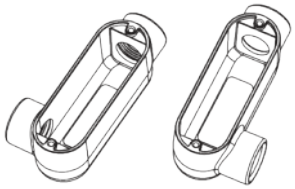

Detailed Drawings

RLT/T

Trade Size	Catalog Number	A	B	C	D	E ± 0.010 [.25]	F Tapped Holes	G NPT Thread	H Throat Dia +0/-0.020[0.51]	Volume	Maximum Wire Fill
1/2″	**RLT050**	4.72	2.03	1.36	1.34	3.500	#8-32UNC-2B	1/2”-14NPT	0.612	4.3 CU.IN	
		119.9	51.6	34.5	34.0	88.90			15.54	70 CC	
3/4″	**RLT075**	5.51	2.30	1.63	1.56	4.125	#8-32UNC-2B	3/4”-14NPT	0.814	7.3 CU.IN	3 # 6 AWG MAX
		140.0	58.4	41.3	39.6	104.78			20.68	119 CC	
1″	**RLT100**	6.46	2.68	1.89	1.82	4.830	#8-32UNC-2B	1”-11 1/2NPT	1.039	12.0 CU.IN	3 # 4 AWG MAX
		164.1	68.1	48.0	46.2	122.68			26.39	196 CC	
1-1/4″	**RLT125**	8.35	3.52	2.50	2.51	6.500	#12-24UNC-2B	1-1/4”-11 1/2NPT	1.370	32.3 CU.IN	3 # 2 AWG MAX
		212.1	89.4	63.5	63.8	165.10			34.80	529 CC	
1-1/2″	**RLT150**	8.35	3.52	2.50	2.51	6.500	#12-24UNC-2B	1-1/2”-11 1/2NPT	1.600	34.2 CU.IN	3 # 2 AWG MAX
		212.1	89.4	63.5	63.8	165.10			40.64	560 CC	
2″	**RLT200**	10.55	4.27	3.41	3.19	8.562	#12-24UNC-2B	2”-11 1/2NPT	2.057	71.4 CU.IN	3 # 2/0 MAX
		268.0	108.5	86.6	81.0	217.47			52.25	1170 CC	
2-1/2″	**RLT250**	13.46	5.89	3.98	4.49	11.250	5/16”-18 UNC-2B	2-1/2”-8NPT	2.459	157.4 CU.IN	3 # 4/0 MAX
		341.9	149.6	101.1	114.0	285.75			62.46	2579 CC	
3″	**RLT300**	13.46	5.89	4.53	4.49	11.250	5/16”-18 UNC-2B	3”-8NPT	3.058	179.8 CU.IN	3 # 250 MAX
		341.9	149.6	115.1	114.0	285.75			77.67	2946 CC	
3-1/2″	**RLT350**	16.30	7.66	5.59	5.55	13.687	5/16”-18 UNC-2B	3-1/2”-8NPT	3.538	323.0 CU.IN	3 # 250 MAX
		414.0	194.6	142.0	141.0	347.65			89.87	5293 CC	
4″	**RLT400**	16.30	7.66	5.59	5.55	13.687	5/16”-18 UNC-2B	4”-8NPT	4.016	323.0 CU.IN	3 # 250 MAX
		414.0	194.6	142.0	141.0	347.65			102.01	5293 CC	

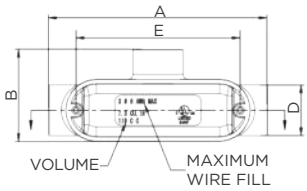

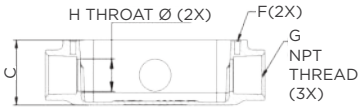

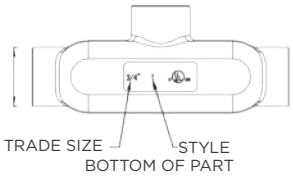

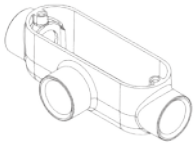

RSLB

Catalog Number	Conduit Size	A	B	C
RSLB050	1/2″	1.587	1.366	3.26
RSLB075	3/4″	1.878	1.693	3.663
RSLB100	1″	2.087	1.917	4.272
RSLB125	1-1/4″	2.579	2.39	5.506
RSLB150	1-1/2″	2.697	2.654	6.217
RSLB200	2″	3.075	3.122	6.715

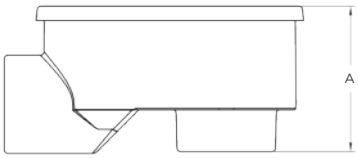

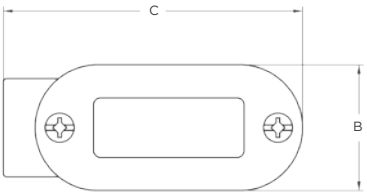

EALB/ELB

Trade Size	Catalog Number	A	B	C	D	F ± 0.010 [.25]	G Tapped Holes	ØJ	K	ØL	Volume	Maximum Wire Fill	SET SCREW (2X)
1/2″	**ELB050**	4.31	1.34	2.09	3.90	3.500	#8-32UNC-2B	0.721	0.225	0.612	4.3 CU.IN		#12-24UNCX.030″
		[109.5]	[34.0]	[53.0]	[99.0]	[88.90]		[18.32]	[5.72]	[15.54]	70 CC		[7.62] LONG
3/4″	**ELB075**	5.08	1.56	2.39	4.63	4.125	#8-32UNC-2B	0.955	0.225	0.814	7.3 CU.IN	3 # 6 AWG MAX	#12-24UNCX.030″
		[129.1]	[39.7]	[60.8]	[117.5]	[104.77]		[24.26]	[5.72]	[20.68]	119 CC		[7.62] LONG
1″	**ELB100**	5.92	1.82	2.78	5.35	4.830	#8-32UNC-2B	1.178	0.225	1.039	12.0 CU.IN	3 # 4 AWG MAX	#12-24UNCX.030″
		[150.35]	[46.2]	[70.5]	[135.8]	[122.68]		[29.92]	[5.72]	[26.39]	196 CC		[7.62] LONG

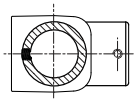

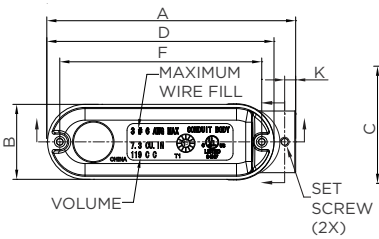

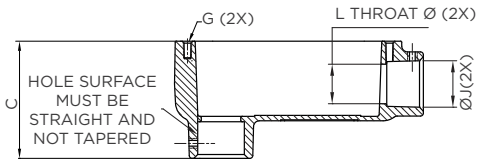

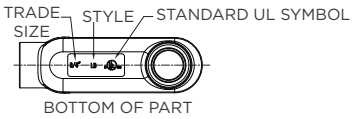

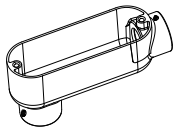

Detailed Drawings

EALB/ELB (cont.)

Trade Size	Catalog Number	A	B	C	D	F ± 0.010 [.25]	G Tapped Holes	ØJ	K	ØL	Volume	Maximum Wire Fill	SET SCREW (4X)
1-1/4″	ELB125	7.82 [198.6]	2.51 [63.7]	3.52 [89.5]	7.24 [184.0]	6.500 [165.1]	#12-24 UNC-2B	1.525 [38.74]	0.260 [6.60]	1.370 [34.80]	30.8 CU.IN 504 CC	3 # 2 AWG MAX	#12-24UNCX .030″[7.62] LONG
1-1/2″	ELB150	7.82 [198.6]	2.51 [63.7]	3.52 [89.5]	7.24 [184.0]	6.500 [165.1]	#12-24 UNC-2B	1.755 [44.58]	0.338 [8.58]	1.600 [40.64]	30.8 CU.IN 504 CC	3 # 2 AWG MAX	#12-24UNCX .030″[7.62] LONG
2″	ELB200	10.05 [255.3]	3.19 [81.0]	4.51 [114.5]	9.49 [241.0]	8.562 [217.48]	#12-24 UNC-2B	2.121 [56.18]	0.350 [8.89]	2.025 [51.44]	67.0 CU.IN 1098 CC	3 # 2/0 MAX	5/16″-24UNFX .055″[14.0] LONG
2-1/2″	ELB250	12.83 [326]	4.49 [114.0]	5.31 [135.0]	12.20 [310.0]	11.250 [285.75]	5/16″-18 UNC-2B	2.895 [73.53]	0.375 [9.53]	2.660 [67.56]	157.3 CU.IN 2578 CC	3 # 250 MAX	5/16″-24UNFX .055″[14.0] LONG
3″	ELB300	12.83 [326]	4.49 [114.0]	5.91 [150.0]	12.20 [310.0]	11.250 [285.75]	5/16″-18 UNC-2B	3.520 [89.41]	0.375 [9.53]	3.272 [83.11]	179.8 CU.IN 2946 CC	3 # 250 MAX	5/16″-24UNFX .055″[14.0] LONG
3-1/2″	ELB350	15.65 [397.5]	5.55 [141.0]	7.09 [180.0]	15.0 [381.0]	13.687 [347.65]	5/16″-18 UNC-2B	4.035 [102.50]	0.500 [12.7]	3.755 [95.38]	323.0 CU.IN 5293 CC	3 # 250 MAX	5/16″-24UNFX .055″[14.0] LONG
4″	ELB400	15.65 [397.5]	5.55 [141.0]	7.09 [180.0]	15.0 [381.0]	13.687 [347.65]	5/16″-18 UNC-2B	4.525 [114.94]	0.500 [12.7]	4.225 [107.32]	323.0 CU.IN 5293 CC	3 # 250 MAX	5/16″-24UNFX .055″[14.0] LONG

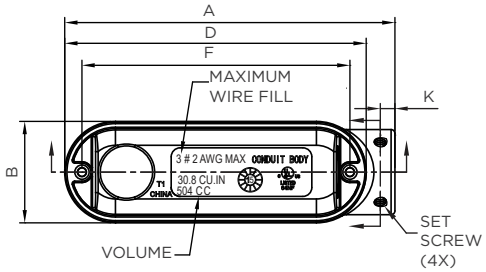

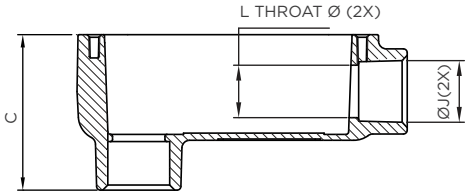

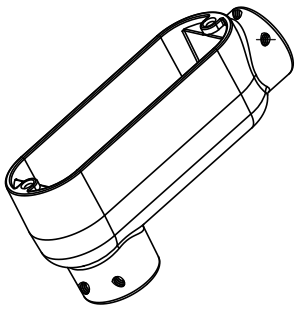

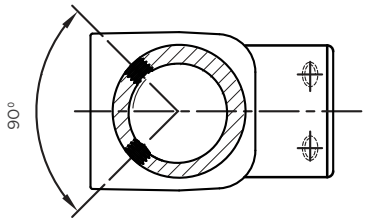

EAC/EC

Trade Size	Catalog Number	A	B	C	D	F ± 0.010 [.25]	G Tapped Holes	ØJ	K	ØL	Volume	Maximum Wire Fill	SET SCREW (2X)
1/2″	EC050	4.72 [120]	1.34 [34.0]	1.36 [34.5]	3.90 [99.0]	3.500 [88.90]	#8-32 UNC-2B	0.721 [18.32]	0.225 [5.72]	0.612 [15.54]	4.3 CU.IN 70 CC		#12-24UNCX.030″ [7.62] LONG
3/4″	EC075	5.51 [140]	1.56 [39.7]	1.626 [41.3]	4.63 [117.5]	4.125 [104.77]	#8-32 UNC-2B	0.955 [24.26]	0.225 [5.72]	0.814 [20.68]	7.3 CU.IN 119 CC	3 # 6 AWG MAX	#12-24UNCX.030″ [7.62] LONG
1″	EC100	6.46 [164]	1.82 [46.2]	1.89 [48.0]	5.35 [135.8]	4.830 [122.68]	#8-32 UNC-2B	1.178 [29.92]	0.225 [5.72]	1.039 [26.39]	12.0 CU.IN 196 CC	3 # 4 AWG MAX	#12-24UNCX.030″ [7.62] LONG

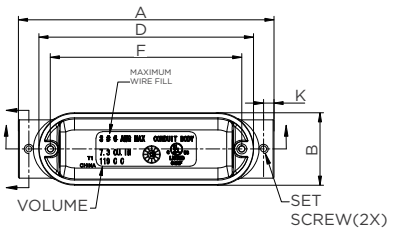

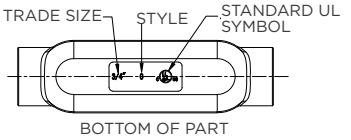

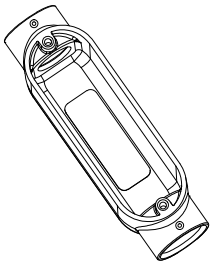

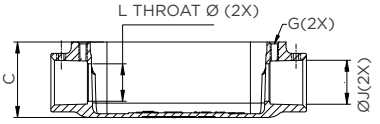

EAC/EC

Trade Size	Catalog Number	A	B	C	D	F ± 0.010 [.25]	G Tapped Holes	ØJ	K	ØL	Volume	Maximum Wire Fill	SET SCREW (4X)
1-1/4″	EC125	8.35 [212]	2.51 [63.7]	2.50 [63.5]	7.24 [184.0]	6.500 [165.1]	#12-24 UNC-2B	1.525 [38.74]	0.260 [6.60]	1.370 [34.80]	30.8 CU.IN 504 CC	3 # 2 AWG MAX	#12-24UNCX .030″[7.62] LONG
1-1/2″	EC150	8.35 [212]	2.51 [63.7]	2.50 [63.5]	7.24 [184.0]	6.500 [165.1]	#12-24 UNC-2B	1.755 [44.58]	0.338 [8.58]	1.600 [40.64]	30.8 CU.IN 504 CC	3 # 2 AWG MAX	#12-24UNCX .030″[7.62] LONG
2″	EC200	10.55 [268]	3.19 [81.0]	3.41 [86.5]	9.49 [241.0]	8.562 [217.48]	#12-24 UNC-2B	2.212 [56.18]	0.350 [8.89]	2.025 [51.44]	67.0 CU.IN 1098 CC	3 # 2/0 MAX	5/16″-24UNFX .055″[14.0] LONG
2-1/2″	EC250	13.46 [342]	4.49 [114.0]	3.98 [101.0]	12.20 [310.0]	11.250 [285.75]	5/16”-18 UNC-2B	2.895 [73.53]	0.375 [9.53]	2.660 [67.56]	157.3 CU.IN 2578 CC	3 # 250 MAX	5/16″-24UNFX .055″[14.0] LONG
3″	EC300	13.46 [342]	4.49 [114.0]	4.53 [115.0]	12.20 [310.0]	11.250 [285.75]	5/16”-18 UNC-2B	3.520 [89.41]	0.375 [9.53]	3.272 [83.11]	179.8 CU.IN 2946 CC	3 # 250 MAX	5/16″-24UNFX .055″[14.0] LONG
3-1/2″	EC350	16.30 [414]	5.55 [141.0]	5.59 [142.0]	15.0 [381.0]	13.687 [347.65]	5/16”-18 UNC-2B	4.035 [102.50]	0.500 [12.7]	3.755 [95.38]	318.3CU.IN 5215 CC	3 # 250 MAX	5/16″-24UNFX .055″[14.0] LONG
4″	EC400	16.30 [414]	5.55 [141.0]	5.59 [142.0]	15.0 [381.0]	13.687 [347.65]	5/16”-18 UNC-2B	4.525 [114.94]	0.500 [12.7]	4.225 [107.32]	323.0 CU.IN 5293 CC	3 # 250 MAX	5/16″-24UNFX .055″[14.0] LONG

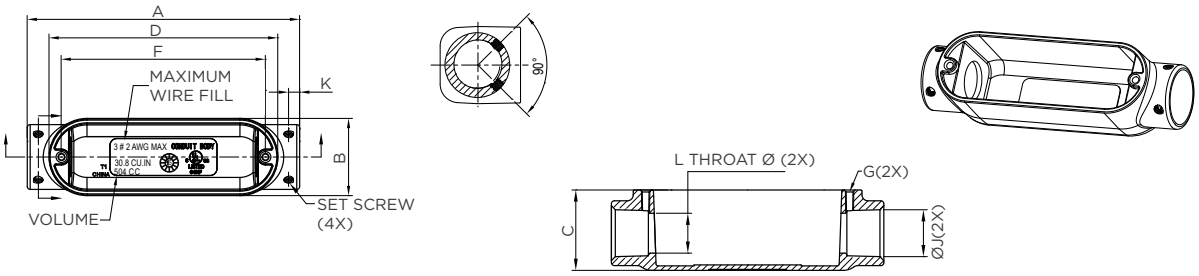

EALL/EL

Trade Size	Catalog Number	A	B	C	D	F ± 0.010 [.25]	G Tapped Holes	ØJ	K	ØL	Volume	Maximum Wire Fill	SET SCREW (2X)
1/2″	ELL050	4.31 [109.5]	2.03 [51.5]	1.36 [34.5]	3.90 [99.0]	3.500 [88.90]	#8-32 UNC-2B	0.721 [18.32]	0.225 [5.72]	0.612 [15.54]	4.3 CU.IN 70 CC		#12-24UNCX.030″ [7.62] LONG
3/4″	ELL075	5.08 [129.1]	2.30 [58.5]	1.626 [41.3]	4.63 [117.5]	4.125 [104.77]	#8-32 UNC-2B	0.955 [24.26]	0.225 [5.72]	0.814 [20.68]	7.3 CU.IN 119 CC	3 # 6 AWG MAX	#12-24UNCX.030″ [7.62] LONG
1″	ELL100	5.92 [150.35]	2.68 [68.1]	1.89 [48.0]	5.35 [135.8]	4.830 [122.68]	#8-32 UNC-2B	1.178 [29.92]	0.225 [5.72]	1.039 [26.39]	12.0 CU.IN 196 CC	3 # 4 AWG MAX	#12-24UNCX.030″ [7.62] LONG

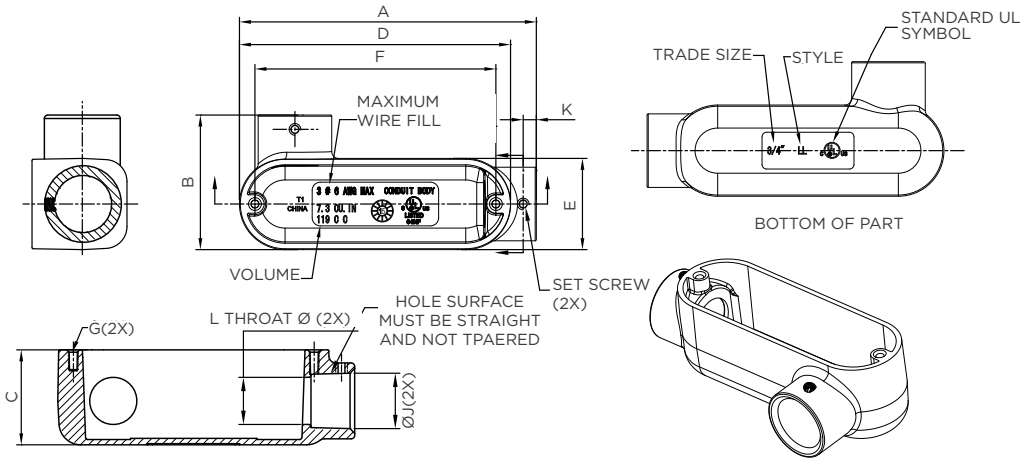

Detailed Drawings

EALL/EL

Trade Size	Catalog Number	A	B	C	D	F ± 0.010 [.25]	G Tapped Holes	ØJ	K	ØL	Volume	Maximum Wire Fill	SET SCREW (4X)
1-1/4"	ELL125	7.82 [198.6]	3.52 [89.4]	2.50 [63.5]	7.24 [184.0]	6.500 [165.1]	#12-24 UNC-2B	1.525 [38.74]	0.260 [6.60]	1.370 [34.80]	30.8 CU.IN 504 CC	3 # 2 AWG MAX	#12-24UNCX .030"[7.62] LONG
1-1/2"	ELL150	7.82 [198.6]	3.52 [89.4]	2.50 [63.5]	7.24 [184.0]	6.500 [165.1]	#12-24 UNC-2B	1.755 [44.58]	0.338 [8.58]	1.600 [40.64]	30.8 CU.IN 504 CC	3 # 2 AWG MAX	#12-24UNCX .030"[7.62] LONG
2"	ELL200	10.05 [255.3]	4.27 [108.5]	3.41 [86.5]	9.49 [241.0]	8.562 [217.48]	#12-24 UNC-2B	2.212 [56.18]	0.350 [8.89]	2.025 [51.44]	67.0 CU.IN 1098 CC	3 # 2/0 MAX	5/16"-24UNFX .055"[14.0] LONG
2-1/2"	ELL250	12.83 [326]	5.89 [149.5]	3.98 [101.0]	12.20 [310.0]	11.250 [285.75]	5/16"-18 UNC-2B	2.895 [73.53]	0.375 [9.53]	2.660 [67.56]	157.3 CU.IN 2578 CC	3 # 250 MAX	5/16"-24UNFX .055"[14.0] LONG
3"	ELL300	12.83 [326]	5.89 [149.5]	4.53 [115.0]	12.20 [310.0]	11.250 [285.75]	5/16"-18 UNC-2B	3.520 [89.41]	0.375 [9.53]	3.272 [83.11]	179.8 CU.IN 2946 CC	3 # 250 MAX	5/16"-24UNFX .055"[14.0] LONG
3-1/2"	ELL350	15.65 [397.5]	7.66 [194.5]	5.59 [142.0]	15.0 [381.0]	13.687 [347.65]	5/16"-18 UNC-2B	4.035 [102.50]	0.500 [12.7]	3.755 [95.38]	323.0CU.IN 5293 CC	3 # 250 MAX	5/16"-24UNFX .055"[14.0] LONG
4"	ELL400	15.65 [397.5]	7.66 [194.5]	5.59 [142.0]	15.0 [381.0]	13.687 [347.65]	5/16"-18 UNC-2B	4.525 [114.94]	0.500 [12.7]	4.225 [107.32]	323.0 CU.IN 5293 CC	3 # 250 MAX	5/16"-24UNFX .055"[14.0] LONG

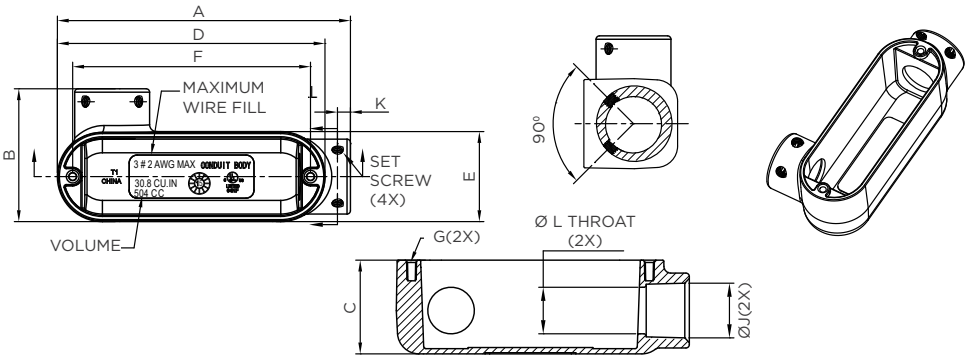

EALR/ELR

Trade Size	Catalog Number	A	B	C	D	E	F ± 0.010 [.25]	G Tapped Holes	ØJ	K	ØL	Volume	Maximum Wire Fill	SET SCREW (2X)
1/2"	ELR050	4.31 [109.5]	2.03 [51.5]	1.36 [34.5]	3.90 [99.0]	1.34 [34.0]	3.500 [88.90]	#8-32UNC-2B	0.721 [18.32]	0.225 [5.72]	0.612 [15.54]	4.3 CU.IN 70 CC		#12-24UNCX.030" [7.62] LONG
3/4"	ELR075	5.08 [129.1]	2.30 [58.5]	1.626 [41.3]	4.63 [117.5]	1.56 [39.7]	4.125 [104.77]	#8-32UNC-2B	0.955 [24.26]	0.225 [5.72]	0.814 [20.68]	7.3 CU.IN 119 CC	3 # 6 AWG MAX	#12-24UNCX.030" [7.62] LONG
1"	ELR100	5.92 [150.35]	2.68 [68.1]	1.89 [48.0]	5.35 [135.8]	1.82 [46.2]	4.830 [122.68]	#8-32UNC-2B	1.178 [29.92]	0.225 [5.72]	1.039 [26.39]	12.0 CU.IN 196 CC	3 # 4 AWG MAX	#12-24UNCX.030" [7.62] LONG

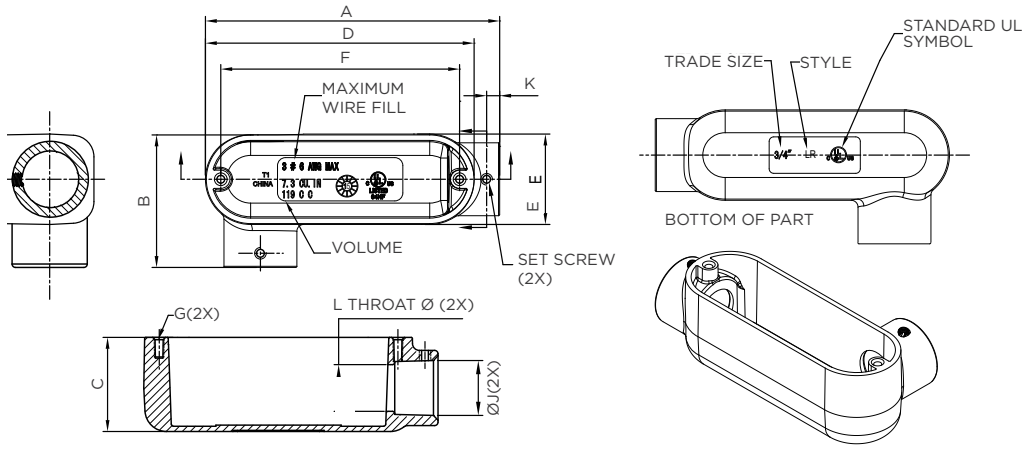

EALR/ELR (Cont.)

Trade Size	Catalog Number	A	B	C	D	E	F ± 0.010 [.25]	G Tapped Holes	ØJ	K	ØL	Volume	Maximum Wire Fill	SET SCREW (4X)
1-1/4"	ELR125	7.82	3.52	2.50	7.24	2.51	6.500	#12-24UNC-2B	1.525	0.260	1.370	30.8 CU.IN	3 # 2 AWG MAX	#12-24UNCX .030"[7.62] LONG
		[198.6]	[89.4]	[63.5]	[184.0]	[63.7]	[165.1]		[38.74]	[6.60]	[34.80]	504 CC		
1-1/2"	ELR150	7.82	3.52	2.50	7.24	2.51	6.500	#12-24UNC-2B	1.755	0.338	1.600	30.8 CU.IN	3 # 2 AWG MAX	#12-24UNCX .030"[7.62] LONG
		[198.6]	[89.4]	[63.5]	[184.0]	[63.7]	[165.1]		[44.58]	[8.58]	[40.64]	504 CC		
2"	ELR200	10.05	4.27	3.41	9.49	3.19	8.562	#12-24UNC-2B	2.212	0.350	2.025	67.0 CU.IN	3 # 2/0 MAX	5/16"-24UNFX .055"[14.0] LONG
		[255.3]	[108.5]	[86.5]	[241.0]	[81.0]	[217.48]		[56.18]	[8.89]	[51.44]	1098 CC		
2-1/2"	ELR250	12.83	5.89	3.98	12.20	4.49	11.250	5/16"-18 UNC-2B	2.895	0.375	2.660	157.3 CU.IN	3 # 250 MAX	5/16"-24UNFX .055"[14.0] LONG
		[326]	[149.5]	[101.0]	[310.0]	[114.0]	[285.75]		[73.53]	[9.53]	[67.56]	2578 CC		
3"	ELR300	12.83	5.89	4.53	12.20	4.49	11.250	5/16"-18 UNC-2B	3.520	0.375	3.272	179.8 CU.IN	3 # 250 MAX	5/16"-24UNFX .055"[14.0] LONG
		[326]	[149.5]	[115.0]	[310.0]	[114.0]	[285.75]		[89.41]	[9.53]	[83.11]	2946 CC		
3-1/2"	ELR350	15.65	7.66	5.59	15.0	5.55	13.687	5/16"-18 UNC-2B	4.035	0.500	3.755	323.0CU.IN	3 # 250 MAX	5/16"-24UNFX .055"[14.0] LONG
		[397.5]	[194.5]	[142.0]	[381.0]	[141.0]	[347.65]		[102.50]	[12.7]	[95.38]	5293 CC		
4"	ELR400	15.65	7.66	5.59	15.0	5.55	13.687	5/16"-18 UNC-2B	4.525	0.500	4.225	323.0 CU.IN	3 # 250 MAX	5/16"-24UNFX .055"[14.0] LONG
		[397.5]	[194.5]	[142.0]	[381.0]	[141.0]	[347.65]		[114.94]	[12.7]	[107.32]	5293 CC		

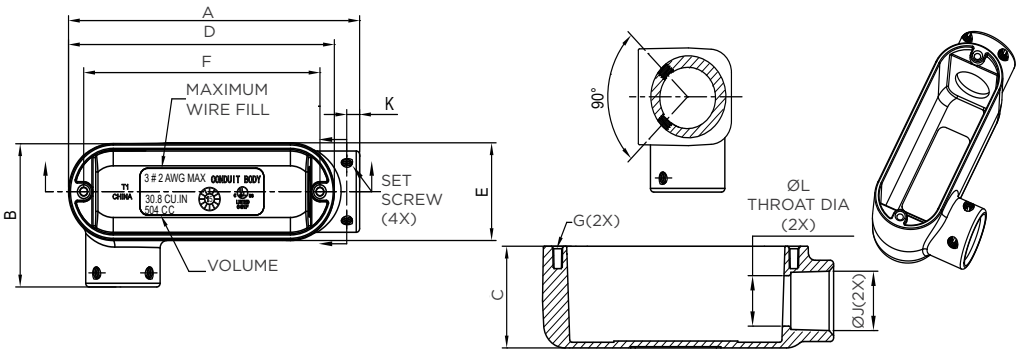

EAT/ET

Trade Size	Catalog Number	A	B	C	D	E	F ± 0.010 [.25]	G Tapped Holes	ØJ	K	ØL	Volume	Maximum Wire Fill	SET SCREW (3X)
1/2"	ET050	4.72	2.03	1.36	3.90	1.34	3.500	#8-32UNC-2B	0.721	0.225	0.612	4.3 CU.IN		#12-24UNCX.030" [7.62] LONG
		[120]	[51.5]	[34.5]	[99.0]	[34.0]	[88.90]		[18.32]	[5.72]	[15.54]	70 CC		
3/4"	ET075	5.51	2.30	1.626	4.63	1.56	4.125	#8-32UNC-2B	0.955	0.225	0.814	7.3 CU.IN	3 # 6 AWG MAX	#12-24UNCX.030" [7.62] LONG
		[140]	[58.5]	[41.3]	[117.5]	[39.7]	[104.77]		[24.26]	[5.72]	[20.68]	119 CC		
1"	ET100	6.46	2.68	1.89	5.35	1.82	4.830	#8-32UNC-2B	1.178	0.225	1.039	12.0 CU.IN	3 # 4 AWG MAX	#12-24UNCX.030" [7.62] LONG
		[164]	[68.1]	[48.0]	[135.8]	[46.2]	[122.68]		[29.92]	[5.72]	[26.39]	196 CC		

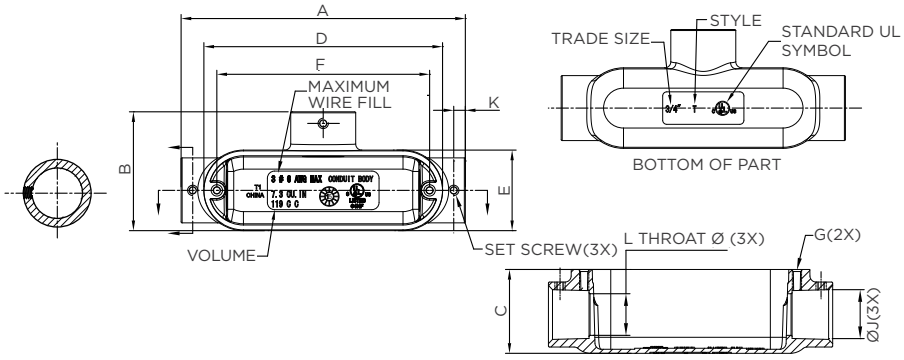

Detailed Drawings

EAT/ET

Trade Size	Catalog Number	A	B	C	D	E	F ± 0.010 [.25]	G Tapped Holes	ØJ	K	ØL	Volume	Maximum Wire Fill	SET SCREW (6X)
1-1/4"	ET125	8.35 [212]	3.52 [89.4]	2.50 [63.5]	7.24 [184.0]	2.51 [63.7]	6.500 [165.1]	#12-24UNC-2B	1.525 [38.74]	0.260 [6.60]	1.370 [34.80]	30.8 CU.IN 504 CC	3 # 2 AWG MAX	#12-24UNCX .030"[7.62] LONG
1-1/2"	ET150	8.35 [212]	3.52 [89.4]	2.50 [63.5]	7.24 [184.0]	2.51 [63.7]	6.500 [165.1]	#12-24UNC-2B	1.755 [44.58]	0.338 [8.58]	1.600 [40.64]	30.8 CU.IN 504 CC	3 # 2 AWG MAX	#12-24UNCX .030"[7.62] LONG
2"	ET200	10.55 [268]	4.27 [108.5]	3.41 [86.5]	9.49 [241.0]	3.19 [81.0]	8.562 [217.48]	#12-24UNC-2B	2.212 [56.18]	0.350 [8.89]	2.025 [51.44]	67.0 CU.IN 1098 CC	3 # 2/0 MAX	5/16"-24UNFX .055"[14.0] LONG
2-1/2"	ET250	13.46 [342]	5.89 [149.5]	3.98 [101.0]	12.20 [310.0]	4.49 [114.0]	11.250 [285.75]	5/16"-18 UNC-2B	2.895 [73.53]	0.375 [9.53]	2.660 [67.56]	157.3 CU.IN 2578 CC	3 # 250 MAX	5/16"-24UNFX .055"[14.0] LONG
3"	ET300	13.46 [342]	5.89 [149.5]	4.53 [115.0]	12.20 [310.0]	4.49 [114.0]	11.250 [285.75]	5/16"-18 UNC-2B	3.520 [89.41]	0.375 [9.53]	3.272 [83.11]	179.8 CU.IN 2946 CC	3 # 250 MAX	5/16"-24UNFX .055"[14.0] LONG
3-1/2"	ET350	16.30 [414]	7.66 [194.5]	5.59 [142.0]	15.0 [381.0]	5.55 [141.0]	13.687 [347.65]	5/16"-18 UNC-2B	4.035 [102.50]	0.500 [12.7]	3.755 [95.38]	323.0CU.IN 5293 CC	3 # 250 MAX	5/16"-24UNFX .055"[14.0] LONG
4"	ET400	16.30 [414]	7.66 [194.5]	5.59 [142.0]	15.0 [381.0]	5.55 [141.0]	13.687 [347.65]	5/16"-18 UNC-2B	4.525 [114.94]	0.500 [12.7]	4.225 [107.32]	323.0 CU.IN 5293 CC	3 # 250 MAX	5/16"-24UNFX .055"[14.0] LONG

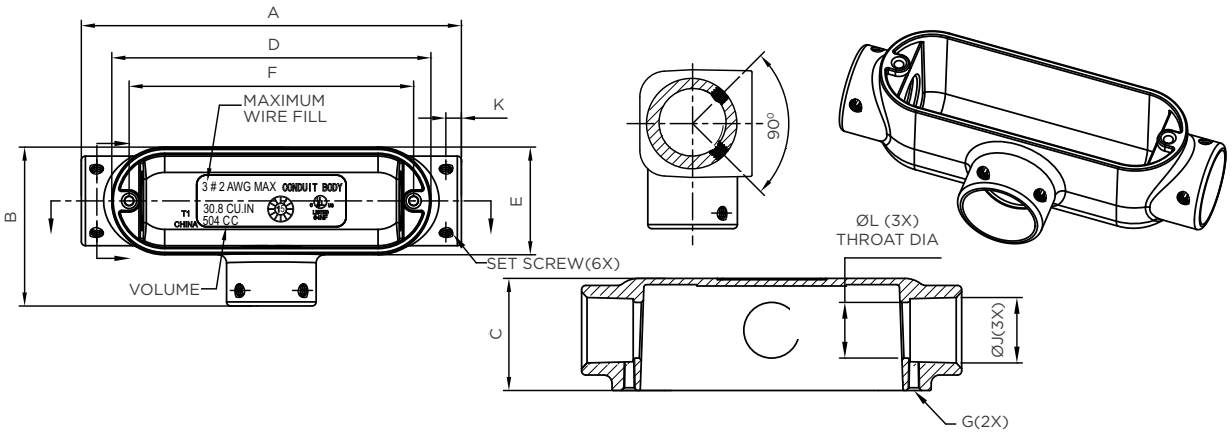

COLB/CLB

Trade Size	Catalog Number	A	B	C	D	F ± 0.010 [.25]	G Tapped Holes	NPSM Thread	J	L +0-0.020 [0.51]	Volume	Maximum Wire Fill	SET SCREW (2X)
1/2"	CLB050	4.31 [109.5]	1.34 [34.0]	2.09 [53.0]	3.90 [99.0]	3.500 [88.90]	#8-32UNC-2B	1/2"-14NPSM	0.225 [5.72]	0.612 [15.54]	4.3 CU.IN 70 CC		#12-24UNCX .030"[7.62] LONG
3/4"	CLB075	5.08 [129.1]	1.56 [39.7]	2.39 [60.8]	4.63 [117.5]	4.125 [104.77]	#8-32UNC-2B	3/4"-14NPSM	0.225 [5.72]	0.814 [20.68]	7.3 CU.IN 119 CC	3 # 6 AWG MAX	#12-24UNCX .030"[7.62] LONG
1"	CLB100	5.92 [150.35]	1.82 [46.2]	2.78 [70.5]	5.35 [135.8]	4.830 [122.68]	#8-32UNC-2B	1"-11 1/2NPSM	0.225 [5.72]	1.039 [26.39]	12.0 CU.IN 196 CC	3 # 4 AWG MAX	#12-24UNCX .030"[7.62] LONG

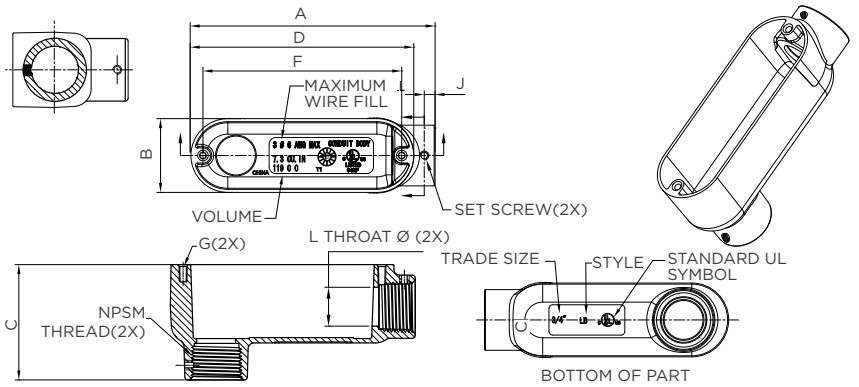

Detailed Drawings

COLB/CLB

Trade Size	Catalog Number	A	B	C	D	F ± 0.010 [.25]	G Tapped Holes	NPSM Thread	J	L +0-0.020 [0.51]	Volume	Maximum Wire Fill	SET SCREW (4X)
1-1/4"	**CLB125**	7.82	2.51	3.52	7.24	6.500	#12-24UNC-2B	1-1/4"-11 1/2NPSM	0.260	1.370	30.8 CU.IN	3 # 2 AWG MAX	#12-24UNCX .030"[7.62] LONG
		[198.6]	[63.7]	[89.5]	[184.0]	[165.1]			[6.60]	[34.80]	504 CC		
1-1/2"	**CLB150**	7.82	2.51	3.52	7.24	6.500	#12-24UNC-2B	1-1/2"-11 1/2NPSM	0.338	1.600	30.8 CU.IN	3 # 2 AWG MAX	#12-24UNCX .030"[7.62] LONG
		[198.6]	[63.7]	[89.5]	[184.0]	[165.1]			[8.58]	[40.64]	504 CC		
2"	**CLB200**	10.05	3.19	4.51	9.49	8.562	#12-24UNC-2B	2"-11 1/2NPSM	0.350	2.057	67.0 CU.IN	3 # 2/0 MAX	5/16"-24UNFX .055"[14.0] LONG
		[255.3]	[81.0]	[114.5]	[241.0]	[217.48]			[8.89]	[52.25]	1098 CC		

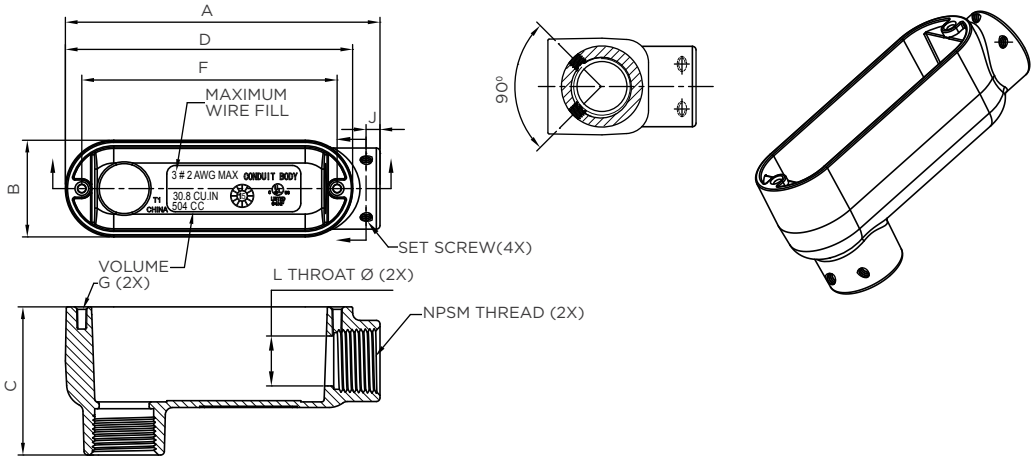

COC/CC

Trade Size	Catalog Number	A	B	C	D	F ā 0.010 [.25]	G Tapped Holes	NPSM Thread	J	L +0-0.020 [0.51]	Volume	Maximum Wire Fill	SET SCREW (2X)
1/2"	**CC050**	4.72	1.34	1.36	3.90	3.500	#8-32UNC-2B	1/2"-14NPSM	0.225	0.612	4.3 CU.IN		#12-24UNCX .030"[7.62] LONG
		[120]	[34.0]	[34.5]	[99.0]	[88.90]			[5.72]	[15.54]	70 CC		
3/4"	**CC075**	5.51	1.56	1.626	4.63	4.125	#8-32UNC-2B	3/4"-14NPSM	0.225	0.814	7.3 CU.IN	3 # 6 AWG MAX	#12-24UNCX .030"[7.62] LONG
		[140]	[39.7]	[41.3]	[117.5]	[104.77]			[5.72]	[20.68]	119 CC		
1"	**CC100**	6.46	1.82	1.89	5.35	4.830	#8-32UNC-2B	1"-11 1/2NPSM	0.225	1.039	12.0 CU.IN	3 # 4 AWG MAX	#12-24UNCX .030"[7.62] LONG
		[164]	[46.2]	[48.0]	[135.8]	[122.68]			[5.72]	[26.39]	196 CC		

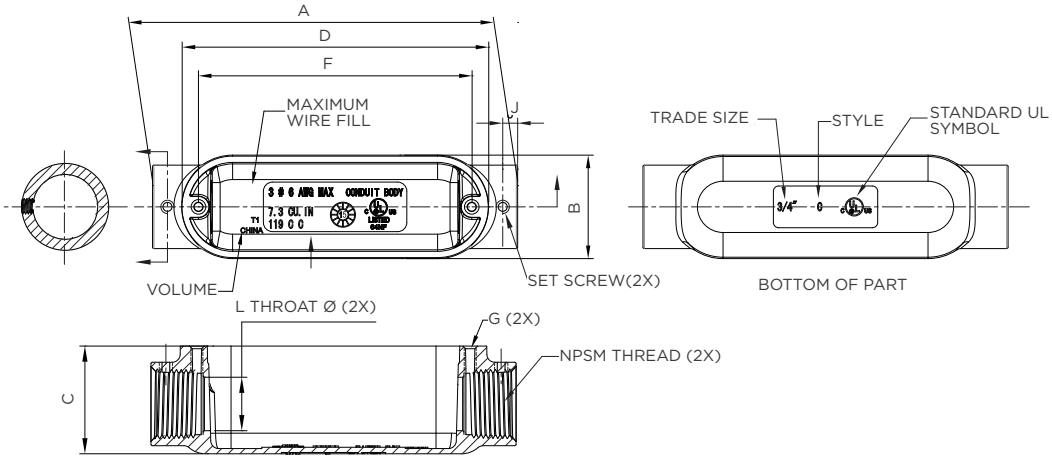

Detailed Drawings

COC/CC (Cont.)

Trade Size	Catalog Number	A	B	C	D	F ± 0.010 [.25]	G Tapped Holes	NPSM Thread	J	L +0-0.020 [0.51]	Volume	Maximum Wire Fill	SET SCREW (4X)
1-1/4"	**CC125**	8.35	2.51	2.50	7.24	6.500	#12-24UNC-2B	1-1/4"-11 1/2NPSM	0.260	1.370	30.8 CU.IN	3 # 2 AWG MAX	#12-24UNCX .030"[7.62] LONG
		[212]	[63.7]	[63.5]	[184.0]	[165.1]			[6.60]	[34.80]	504 CC		
1-1/2"	**CC150**	8.35	2.51	2.50	7.24	6.500	#12-24UNC-2B	1-1/2"-11 1/2NPSM	0.338	1.600	30.8 CU.IN	3 # 2 AWG MAX	#12-24UNCX .030"[7.62] LONG
		[212]	[63.7]	[63.5]	[184.0]	[165.1]			[8.58]	[40.64]	504 CC		
2"	**CC200**	10.55	3.19	3.41	9.49	8.562	#12-24UNC-2B	2"-11 1/2NPSM	0.350	2.057	67.0 CU.IN	3 # 2/0 MAX	5/16"-24UNFX .055"[14.0] LONG
		[268]	[81.0]	[86.5]	[241.0]	[217.48]			[8.89]	[52.25]	1098 CC		

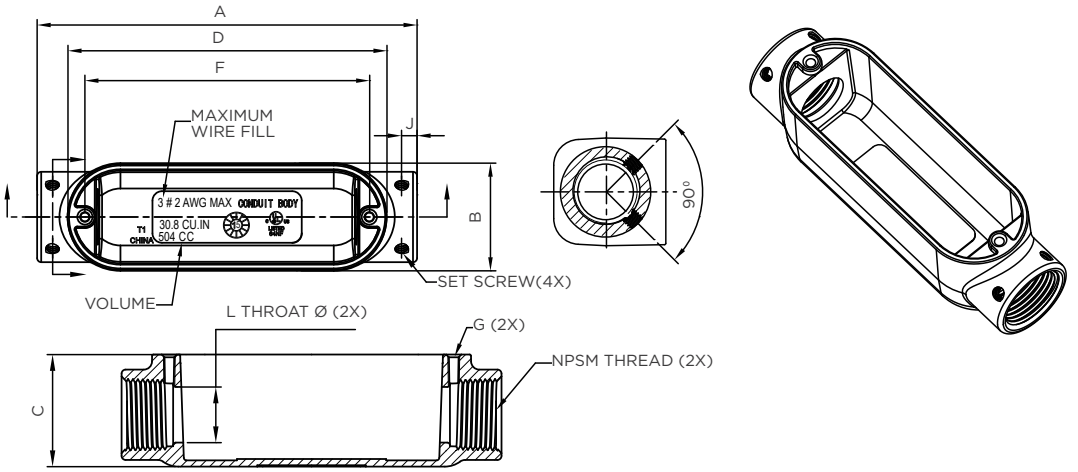

COLL/CLL

Trade Size	Catalog Number	A	B	C	D	E	F ± 0.010 [.25]	G Tapped Holes	NPSM Thread	J	L +0-0.020 [0.51]	Volume	Maximum Wire Fill	SET SCREW (2X)
1/2"	**CLL050**	4.31	2.03	1.36	3.90	1.34	3.500	#8-32UNC-2B	1/2"-14NPSM	0.225	0.612	4.3 CU.IN		#12-24UNCX .030"[7.62] LONG
		[109.5]	[51.5]	[34.5]	[99.0]	[34.0]	[88.90]			[5.72]	[15.54]	70 CC		
3/4"	**CLL075**	5.08	2.30	1.626	4.63	1.56	4.125	#8-32UNC-2B	3/4"-14NPSM	0.225	0.814	7.3 CU.IN	3 # 6 AWG MAX	#12-24UNCX .030"[7.62] LONG
		[129.1]	[58.5]	[41.3]	[117.5]	[39.7]	[104.77]			[5.72]	[20.68]	119 CC		
1"	**CLL100**	5.92	2.68	1.89	5.35	1.82	4.830	#8-32UNC-2B	1"-11 1/2NPSM	0.225	1.039	12.0 CU.IN	3 # 4 AWG MAX	#12-24UNCX .030"[7.62] LONG
		[150.35]	[68.1]	[48.0]	[135.8]	[46.2]	[122.68]			[5.72]	[26.39]	196 CC		

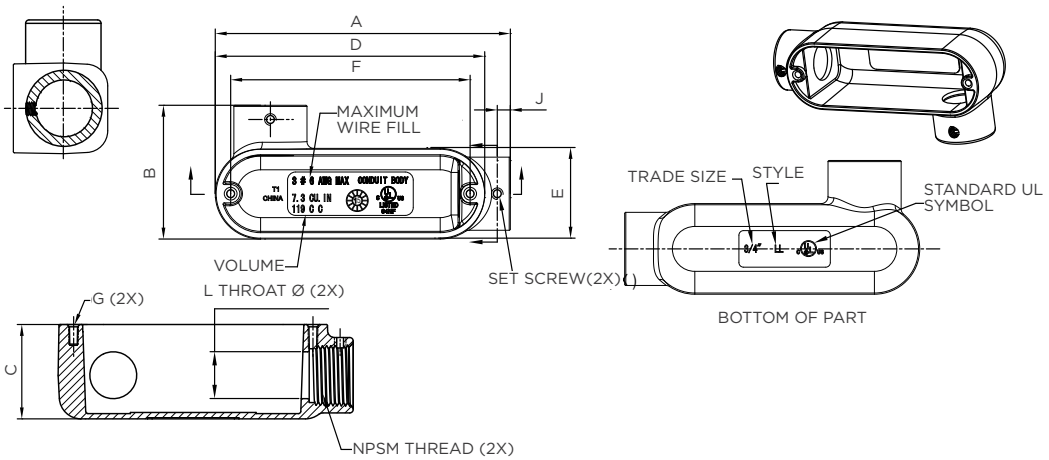

Detailed Drawings

Trade Size	Catalog Number	A	B	C	D	E	F ± 0.010 [.25]	G Tapped Holes	NPSM Thread	J	L +0-0.020 [0.51]	Volume	Maximum Wire Fill	SET SCREW (4X)
1-1/4"	**CLL125**	7.82	3.52	2.50	7.24	2.51	6.500	#12-24UNC-2B	1-1/4"-11 1/2NPSM	0.260	1.370	30.8 CU.IN	3 # 2 AWG MAX	#12-24UNCX .030"[7.62] LONG
		[198.6]	[89.4]	[63.5]	[184.0]	[63.7]	[165.1]			[6.60]	[34.80]	504 CC		
1-1/2"	**CLL150**	7.82	3.52	2.50	7.24	2.51	6.500	#12-24UNC-2B	1-1/2"-11 1/2NPSM	0.338	1.600	30.8 CU.IN	3 # 2 AWG MAX	#12-24UNCX .030"[7.62] LONG
		[198.6]	[89.4]	[63.5]	[184.0]	[63.7]	[165.1]			[8.58]	[40.64]	504 CC		
2"	**CLL200**	10.05	4.27	3.41	9.49	3.19	8.562	#12-24UNC-2B	2"-11 1/2NPSM	0.350	2.057	67.0 CU.IN	3 # 2/0 MAX	5/16"-24UNFX .055"[14.0] LONG
		[255.3]	[108.5]	[86.5]	[241.0]	[81.0]	[217.48]			[8.89]	[52.25]	1098 CC		

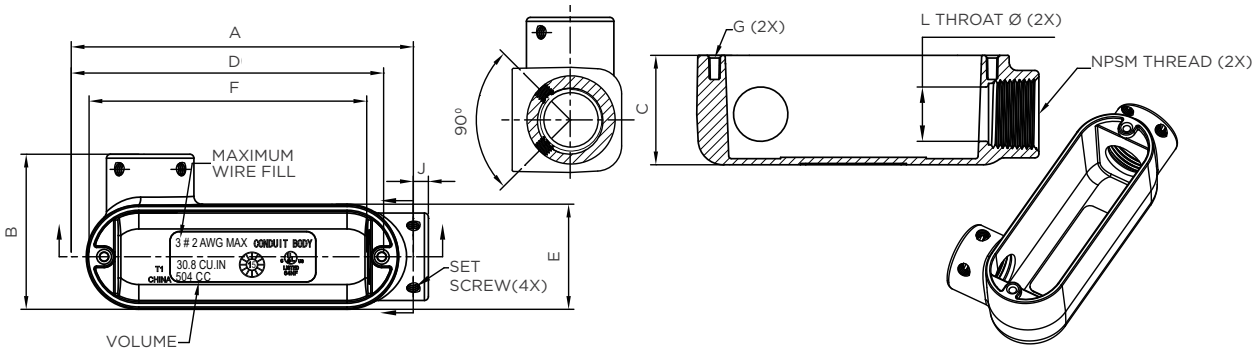

COLR/CLR

Trade Size	Catalog Number	A	B	C	D	F ± 0.010 [.25]	G Tapped Holes	NPSM Thread	J	L +0-0.020 [0.51]	Volume	Maximum Wire Fill	SET SCREW (4X)
1-1/4"	**CLR125**	8.35	2.51	2.50	7.24	6.500	#12-24UNC-2B	1-1/4"-11 1/2NPSM	0.260	1.370	30.8 CU.IN	3 # 2 AWG MAX	#12-24UNCX .030"[7.62] LONG
		[212]	[63.7]	[63.5]	[184.0]	[165.1]			[6.60]	[34.80]	504 CC		
1-1/2"	**CLR150**	8.35	2.51	2.50	7.24	6.500	#12-24UNC-2B	1-1/2"-11 1/2NPSM	0.338	1.600	30.8 CU.IN	3 # 2 AWG MAX	#12-24UNCX .030"[7.62] LONG
		[212]	[63.7]	[63.5]	[184.0]	[165.1]			[8.58]	[40.64]	504 CC		
2"	**CLR200**	10.55	3.19	3.41	9.49	8.562	#12-24UNC-2B	2"-11 1/2NPSM	0.350	2.057	67.0 CU.IN	3 # 2/0 MAX	5/16"-24UNFX .055"[14.0] LONG
		[268]	[81.0]	[86.5]	[241.0]	[217.48]			[8.89]	[52.25]	1098 CC		

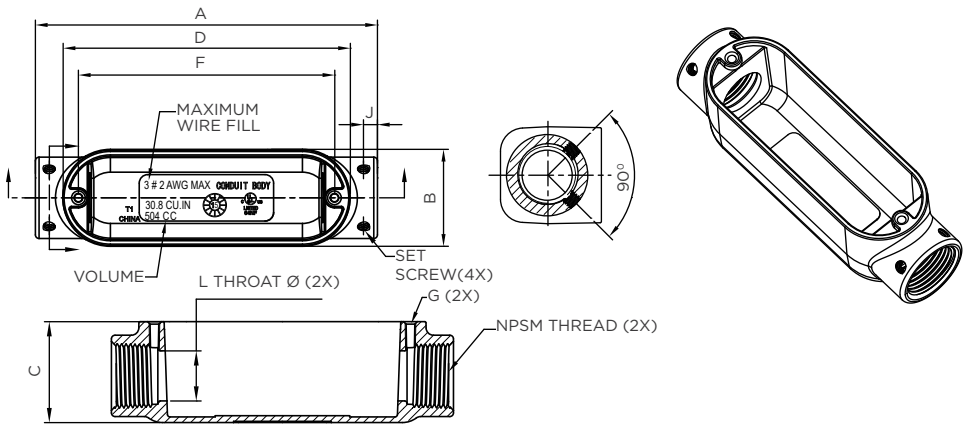

Detailed Drawings

COLB/CLB

Trade Size	Catalog Number	A	B	C	D	E	F ± 0.010 [.25]	G Tapped Holes	NPSM Thread	J	L +0-0.020 [0.51]	Volume	Maximum Wire Fill	SET SCREW (4X)
1-1/4"	CLL125	7.82	3.52	2.50	7.24	2.51	6.500	#12-24UNC-2B	1-1/4"-11 1/2NPSM	0.260	1.370	30.8 CU.IN	3 # 2 AWG MAX	#12-24UNCX .030"[7.62] LONG
		[198.6]	[89.4]	[63.5]	[184.0]	[63.7]	[165.1]			[6.60]	[34.80]	504 CC		
1-1/2"	CLL150	7.82	3.52	2.50	7.24	2.51	6.500	#12-24UNC-2B	1-1/2"-11 1/2NPSM	0.338	1.600	30.8 CU.IN	3 # 2 AWG MAX	#12-24UNCX .030"[7.62] LONG
		[198.6]	[89.4]	[63.5]	[184.0]	[63.7]	[165.1]			[8.58]	[40.64]	504 CC		
2"	CLL200	10.05	4.27	3.41	9.49	3.19	8.562	#12-24UNC-2B	2"-11 1/2NPSM	0.350	2.057	67.0 CU.IN	3 # 2/0 MAX	5/16"-24UNFX .055"[14.0] LONG
		[255.3]	[108.5]	[86.5]	[241.0]	[81.0]	[217.48]			[8.89]	[52.25]	1098 CC		

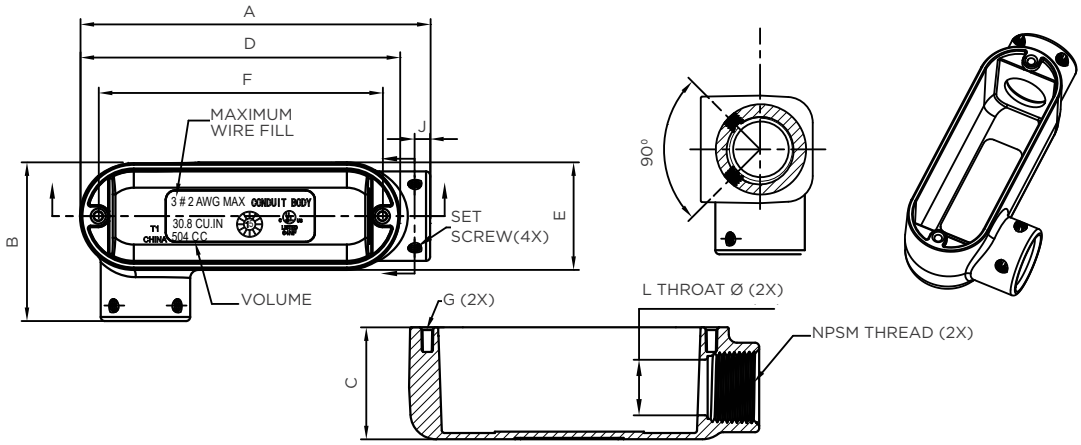

COT/CT

Trade Size	Catalog Number	A	B	C	D	E	F ± 0.010 [.25]	G Tapped Holes	NPSM Thread	J	L +0-0.020 [0.51]	Volume	Maximum Wire Fill	SET SCREW (4X)
1/2"	CT050	4.72	2.03	1.36	3.90	1.34	3.500	#8-32UNC-2B	1/2"-14NPSM	0.225	0.612	4.3 CU.IN		#12-24UNCX .030"[7.62] LONG
		[120]	[51.5]	[34.5]	[99.0]	[34.0]	[88.90]			[5.72]	[15.54]	70 CC		
3/4"	CT075	5.51	2.30	1.626	4.63	1.56	4.125	#8-32UNC-2B	3/4"-14NPSM	0.225	0.814	7.3 CU.IN	3 # 6 AWG MAX	#12-24UNCX .030"[7.62] LONG
		[140]	[58.5]	[41.3]	[117.5]	[39.7]	[104.77]			[5.72]	[20.68]	119 CC		
1"	CT100	6.46	2.68	1.89	5.35	1.82	4.830	#8-32UNC-2B	1"-11 1/2NPSM	0.225	1.039	12.0 CU.IN	3 # 4 AWG MAX	#12-24UNCX .030"[7.62] LONG
		[164]	[68.1]	[48.0]	[135.8]	[46.2]	[122.68]			[5.72]	[26.39]	196 CC		

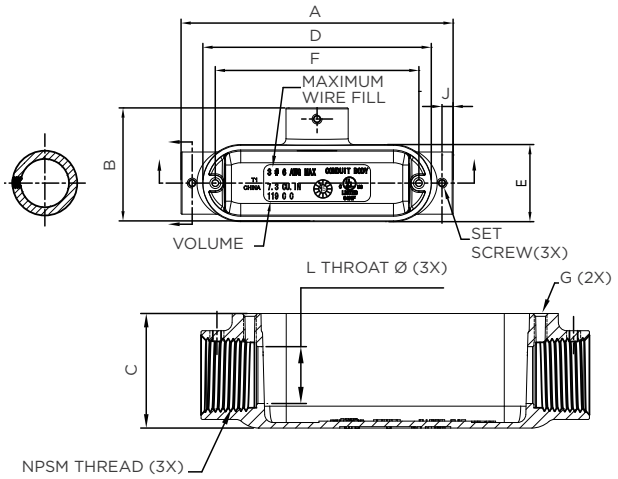

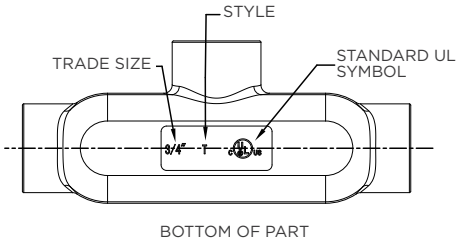

TayMac®

COT/CT (Cont.)

Trade Size	Catalog Number	A	B	C	D	E	F ± 0.010 [.25]	G Tapped Holes	NPSM Thread	J	L +0-0.020 [0.51]	Volume	Maximum Wire Fill	SET SCREW (6X)
1-1/4"	CT125	8.35	3.52	2.50	7.24	2.51	6.500	#12-24UNC-2B	1-1/4"-11 1/2NPSM	0.260	1.370	30.8 CU.IN	3 # 2 AWG MAX	#12-24UNCX .030"[7.62] LONG
		[212]	[89.4]	[63.5]	[184.0]	[63.7]	[165.1]			[6.60]	[34.80]	504 CC		
1-1/2"	CT150	8.35	3.52	2.50	7.24	2.51	6.500	#12-24UNC-2B	1-1/2"-11 1/2NPSM	0.338	1.600	30.8 CU.IN	3 # 2 AWG MAX	#12-24UNCX .030"[7.62] LONG
		[212]	[89.4]	[63.5]	[184.0]	[63.7]	[165.1]			[8.58]	[40.64]	504 CC		
2"	CT200	10.55	4.27	3.41	9.49	3.19	8.562	#12-24UNC-2B	2"-11 1/2NPSM	0.350	2.057	67.0 CU.IN	3 # 2/0 MAX	5/16"-24UNFX .055"[14.0] LONG
		[268]	[108.5]	[86.5]	[241.0]	[81.0]	[217.48]			[8.89]	[52.25]	1098 CC		

SSC Stamped Steel Cover

Trade Size	Catalog Number	A	B	C	D ± 0.2	E	F	G	Captive Screw	F
1/2"	SSC050	3.900	1.340	0.04	3.500	2.890	0.827	0.181	#8-32	1/2"
		[99.0]	[34.0]	[1.0]	[88.90]	[73.4]	[21.0]	[4.6]	UNC-2B	Cover
3/4"	SSC075	4.665	1.535	0.04	4.126	3.426	0.886	0.181	#8-32	3/4"
		[118.5]	[39.0]	[1.0]	[104.8]	[88.0]	[22.5]	[4.6]	UNC-2B	Cover
1"	SSC100	5.374	1.732	0.04	4.831	4.291	1.398	0.181	#8-32	1"
		[136.5]	[44.0]	[1.0]	[122.7]	[109.0]	[35.5]	[4.6]	UNC-2B	Cover
1-1/4"	SSC125	7.283	2.500	0.063	6.500	5.827	1.437	0.181	#12-24	1-1/4"- 1-1/2" Cover
		[185.0]	[63.5]	[1.6]	[165.10]	[148.0]	[36.5]	[4.6]	UNC-2B	
1-1/2"	SSC150	7.283	2.500	0.063	6.500	5.827	1.437	0.181	#12-24	
		[185.0]	[63.5]	[1.6]	[165.10]	[148.0]	[36.5]	[4.6]	UNC-2B	
2"	SSC200	9.488	3.150	0.063	8.563	7.539	1.732	0.181	#12-24	2" Cover
		[241.0]	[80.0]	[1.6]	[217.5]	[191.5]	[44.0]	[4.6]	UNC-2B	
2-1/2"	SSC250	12.205	4.528	0.079	11.25	10.236	2.362	0.197	5/16"-18	2-1/2"- 3" Cover
		[310.0]	[115.0]	[2.0]	[285.8]	[260.0]	[60.0]	[5.0]	UNC-2B	
3"	SSC300	12.205	4.528	0.079	11.25	10.236	2.362	0.197	5/16"-18	
		[310.0]	[115.0]	[2.0]	[285.8]	[260.0]	[60.0]	[5.0]	UNC-2B	
3-1/2"	SSC350	14.961	5.512	0.079	13.69	12.598	2.992	0.197	5/16"-18	3-1/2"- 4" Cover
		[380.0]	[140.0]	[2.0]	[347.6]	[320.0]	[76.0]	[5.0]	UNC-2B	
4"	SSC400	14.961	5.512	0.079	13.685	12.598	2.992	0.197	5/16"-18	
		[380.0]	[140.0]	[2.0]	[347.6]	[320.0]	[76.0]	[5.0]	UNC-2B	

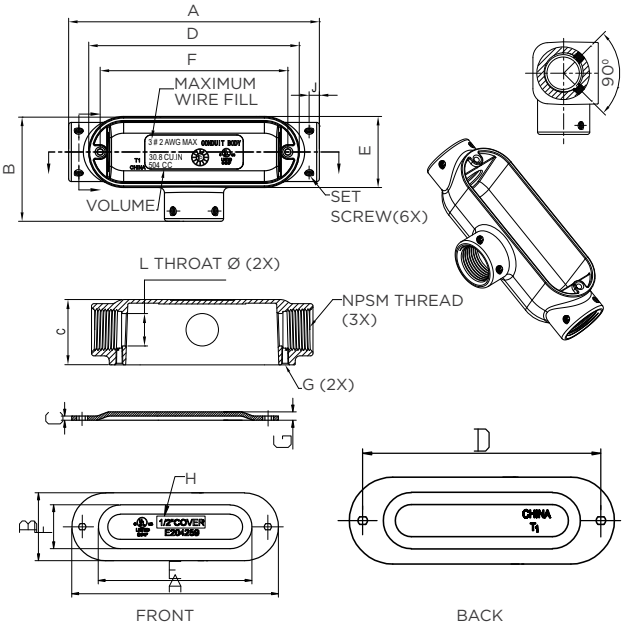

CSC Stamped Alum. Cover (Included W/Assemblies)

Trade Size	Catalog Number	A	B	C	D ± 0.2	E	F	G	Captive Screw	H	I	J
1/2"	CSC050	3.900	1.340	0.070	3.500	2.890	0.827	0.181	#8-32	1/2"	0.145	0.244
		[99.0]	[34.0]	[1.8]	[88.90]	[73.4]	[21.0]	[4.6]	UNC-2B	Cover	[3.7]	[6.2]
3/4"	CSC075	4.665	1.535	0.070	4.126	3.426	0.886	0.181	#8-32	3/4"	0.145	0.244
		[118.5]	[39.0]	[1.8]	[104.8]	[88.0]	[22.5]	[4.6]	UNC-2B	Cover	[3.7]	[6.2]
1"	CSC100	5.374	1.732	0.070	4.831	4.291	1.398	0.181	#8-32	1"	0.145	0.244
		[136.5]	[44.0]	[1.8]	[122.7]	[109.0]	[35.5]	[4.6]	UNC-2B	Cover	[3.7]	[6.2]
1-1/4"	CSC125	7.283	2.500	0.070	6.500	5.827	1.437	0.181	#12-24	1-1/4"- 1-1/2" Cover	0.196	0.299
		[185.0]	[63.5]	[1.8]	[165.10]	[148.0]	[36.5]	[4.6]	UNC-2B		[5.0]	[7.6]
1-1/2"	CSC150	7.283	2.500	0.070	6.500	5.827	1.437	0.181	#12-24		0.196	0.299
		[185.0]	[63.5]	[1.8]	[165.10]	[148.0]	[36.5]	[4.6]	UNC-2B		[5.0]	[7.6]
2"	CSC200	9.488	3.150	0.070	8.563	7.539	1.732	0.181	#12-24	2" Cover	0.196	0.299
		[241.0]	[80.0]	[1.8]	[217.5]	[191.5]	[44.0]	[4.6]	UNC-2B		[5.0]	[7.6]
2-1/2"	CSC250	12.205	4.528	0.098	11.25	10.236	2.362	0.197	5/16"-18	2-1/2"- 3" Cover	0.291	0.393
		[310.0]	[115.0]	[2.5]	[285.8]	[260.0]	[60.0]	[5.0]	UNC-2B		[7.4]	[10.0]
3"	CSC300	12.205	4.528	0.098	11.25	10.236	2.362	0.197	5/16"-18		0.291	0.393
		[310.0]	[115.0]	[2.5]	[285.8]	[260.0]	[60.0]	[5.0]	UNC-2B		[7.4]	[10.0]
3-1/2"	CSC350	14.961	5.512	0.098	13.69	12.598	2.992	0.197	5/16"-18	3-1/2"- 4" Cover	0.291	0.393
		[380.0]	[140.0]	[2.5]	[347.6]	[320.0]	[76.0]	[5.0]	UNC-2B		[7.4]	[10.0]
4"	CSC400	14.961	5.512	0.098	13.685	12.598	2.992	0.197	5/16"-18		0.291	0.393
		[380.0]	[140.0]	[2.5]	[347.6]	[320.0]	[76.0]	[5.0]	UNC-2B		[7.4]	[10.0]

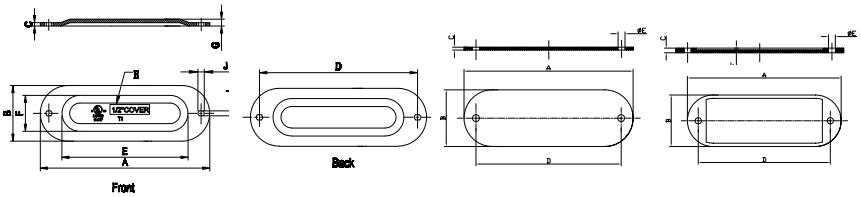

CRG Rubber Gasket

Trade Size	Catalog Number	A	B	C	D ± 0.2	ØE
1/2"	CRG050	3.900	1.340	0.067	3.500	0.157
		[99.0]	[34.0]	[1.7]	[88.90]	[4.0]
3/4"	CRG075	4.665	1.535	0.067	4.126	0.157
		[118.5]	[39.0]	[1.7]	[104.8]	[4.0]
1"	CRG100	5.374	1.732	0.067	4.831	0.157
		[136.5]	[44.0]	[1.7]	[122.7]	[4.0]
1-1/4"	CRG125	7.283	2.500	0.067	6.500	0.189
		[185.0]	[63.5]	[1.7]	[165.10]	[4.8]
1-1/2"	CRG150	7.283	2.500	0.067	6.500	0.189
		[185.0]	[63.5]	[1.7]	[165.10]	[4.8]
2"	CRG200	9.488	3.150	0.067	8.563	0.189
		[241.0]	[80.0]	[1.7]	[217.5]	[4.8]

CRG Rubber Gasket

Trade Size	Catalog Number	A	B	C	D ± 0.2	ØE	F
2-1/2"	CRG250	12.205	4.528	0.125	11.252	0.307	0.0394
		[310.0]	[115.0]	[3.2]	[285.8]	[7.8]	[1.0]
3"	CRG300	12.205	4.528	0.125	11.252	0.307	0.0394
		[310.0]	[115.0]	[3.2]	[285.8]	[7.8]	[1.0]
3-1/2"	CRG350	14.961	5.512	0.125	13.685	0.307	0.0394
		[380.0]	[140.0]	[3.2]	[347.6]	[7.8]	[1.0]
4"	CRG400	14.961	5.512	0.125	13.685	0.307	0.0394
		[380.0]	[140.0]	[3.2]	[347.6]	[7.8]	[1.0]

Notes

Since 1896, RACO has consistently delivered high-quality steel electrical boxes. TayMac and BELL provide weatherproven™ outdoor electrical solutions.

GET IN TOUCH:

custserv@hubbell.com

(574) 234-7151

www.hubbell.com/raco

RACO
3902 W. Sample St.
South Bend, IN 46619

©2026 Wiring Device-Kellems. All rights reserved.
Hubbell and the Hubbell logo are registered trademarks or trademarks of Hubbell Incorporated. All other trademarks are the property of their respective owners.
HES-MULTI-CAT-EN-03988_C | 01/2026

A Hubbell brand collection