Product data sheet

Specifications

Mini circuit breaker, QO, 15A, 1 pole, 120VAC, 22kA, plug in, combo ARC fault, 6mA grd fault A, plug on neutral [TAA]

QO115VHPAFGF

Product availability: Stock - Normally stocked in distribution facility

Main

Product	Miniature circuit-breaker
Range	QO
Current Rating	15 A
Voltage Rating	120 V AC
Mounting Type	Plug-in
Number of Poles	1P
Circuit Breaker Type	Combination ARC-fault Ground fault protecting class A 6 mA
Ratings	HACR rated
Electrical Connection	Pressure plate
Connections Terminals	Plug-on neutral

Complementary

Interrupt Rating	22 kA 120 V AC
Number of Panel Spaces	1
Wire Size	AWG 14...AWG 8 copper
Tightening Torque	40.7 lbf.in (4.6 N.m)
Height	2.72 in (69.08 mm)
Width	0.75 in (19.05 mm)
Depth	4.10 in (104.14 mm)
Product Weight	0.351 lb(US) (0.159 kg)

Environment

Certifications	UL Listed CSA
Ambient Rating	104 °F (40 °C)

Ordering and shipping details

Category	US1DE2A06303
Discount Schedule	DE2A
GTIN	785901778851
Returnability	Yes

Price is “List Price” and may be subject to a trade discount – check with your local distributor or retailer for actual price.

Disclaimer: This documentation is not intended as a substitute for and is not to be used for determining suitability or reliability of these products for specific user applications

Country of origin	US

Packing Units

Unit Type of Package 1	PCE
Nbr. of units in pkg.	1
Package 1 Height	3.81 in (9.68 cm)
Package 1 Width	1.00 in (2.54 cm)
Package 1 Length	4.19 in (10.63 cm)
Package weight(Lbs)	6.46 oz (183.25 g)
Unit Type of Package 2	CAR
Number of Units in Package 2	57
Package 2 Height	20.69 in (52.55 cm)
Package 2 Width	3.8 in (9.7 cm)
Package 2 Length	13.6 in (34.6 cm)
Package 2 Weight	23.44 lb(US) (10.63 kg)

Compliance

Compliance	TAA Compliant

Contractual warranty

Warranty (in months)	18

Environmental Data

Schneider Electric aims to achieve Net Zero status by 2050 through supply chain partnerships, lower impact materials, and circularity via our ongoing “Use Better, Use Longer, Use Again” campaign to extend product lifetimes and recyclability.

Environmental Data explained

How we assess product sustainability

Environmental footprint

Total lifecycle Carbon footprint	**10 kg CO2 eq.**
Carbon footprint of the manufacturing phase [A1 to A3]	**3 kg CO2 eq.**
Carbon footprint of the distribution phase [A4]	**0.1 kg CO2 eq.**
Carbon footprint of the installation phase [A5]	**0 kg CO2 eq.**
Carbon footprint of the use phase [B2, B3, B4, B6]	**7 kg CO2 eq.**
Carbon footprint of the end-of-life phase [C1 to C4]	**0.1 kg CO2 eq.**
Environmental Disclosure	**Product Environmental Profile**

Use Better

Materials and Substances

Packaging made with recycled cardboard	**No**
Packaging without single use plastic	**Yes**
EU RoHS Directive	**Compliant By Exemption**
REACh Regulation	**Reference contains Substances of Very High Concern above the threshold**
California proposition 65	**WARNING: This product can expose you to chemicals including: Nickel compounds, which is known to the State of California to cause cancer. For more information go to www.P65Warnings.ca.gov**

Use Longer

Lifetime extension

Repair	**No**

Use Again

Repack and remanufacture

Recyclability potential, in %	**0**
Circularity Profile	**End of Life Information**
Take-back	**No**

Technical Illustration

Dimensions

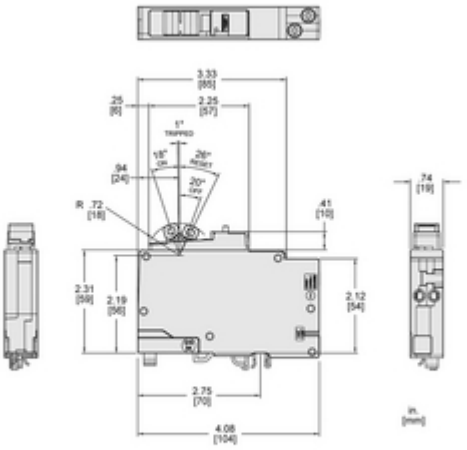

Image of product / Alternate images

Alternative

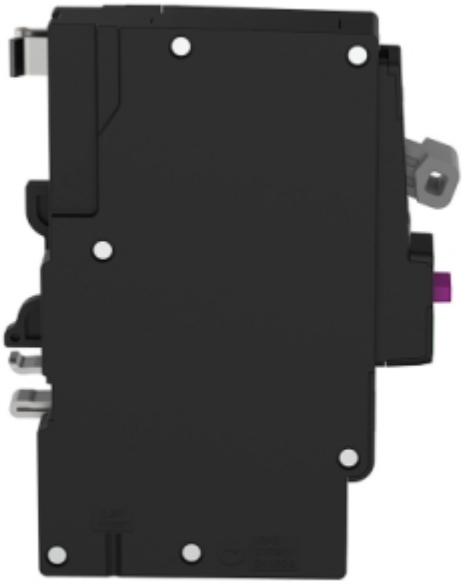

AF/GF
ON
Service
TEST
N

AF/GF
ON
15
OFF
Service
N