Product data sheet

Specifications

Mini circuit breaker, QO, 15A, 1 pole, 120VAC, 22kA, plug in, dual function, pigtail [TAA]

QO115VHDF

Product availability: Non-Stock - Not normally stocked in distribution facility

Main

Product	Miniature circuit-breaker
Range	QO
Current Rating	15 A
Voltage Rating	120 V AC
Mounting Type	Plug-in
Number of Poles	1P
Circuit Breaker Type	Combination ARC-fault and ground fault
Ratings	HACR rated
Electrical Connection	Pressure plate
Connections Terminals	Pigtail neutral

Complementary

Interrupt Rating	22 kA 120 V AC
Number of Panel Spaces	1
Wire Size	AWG 14...AWG 8 copper or aluminium
Tightening Torque	40.7 lbf.in (4.6 N.m)
Height	4.8 in (121 mm)
Width	0.7 in (19 mm)
Depth	2.9 in (74 mm)
Product Weight	0.249 lb(US) (0.113 kg)

Environment

Certifications	UL Listed CSA
Ambient Rating	104 °F (40 °C)

Ordering and shipping details

Category	US1DE2A06303
Discount Schedule	DE2A
GTIN	785901100072
Returnability	Yes
Country of origin	MX

Price is “List Price” and may be subject to a trade discount – check with your local distributor or retailer for actual price.

Disclaimer: This documentation is not intended as a substitute for and is not to be used for determining suitability or reliability of these products for specific user applications

Packing Units

Unit Type of Package 1	PCE
Nbr. of units in pkg.	1
Package 1 Height	4.74 in (12.04 cm)
Package 1 Width	0.74 in (1.88 cm)
Package 1 Length	2.840 in (7.214 cm)
Package weight(Lbs)	4.000 oz (113.398 g)

Compliance

Compliance	TAA Compliant

Contractual warranty

Warranty (in months)	18

Environmental Data

Schneider Electric aims to achieve Net Zero status by 2050 through supply chain partnerships, lower impact materials, and circularity via our ongoing “Use Better, Use Longer, Use Again” campaign to extend product lifetimes and recyclability.

Environmental Data explained

How we assess product sustainability

Environmental footprint

Total lifecycle Carbon footprint	**16 kg CO2 eq.**
Carbon footprint of the manufacturing phase [A1 to A3]	**0.9 kg CO2 eq.**
Carbon footprint of the distribution phase [A4]	**0 kg CO2 eq.**
Carbon footprint of the installation phase [A5]	**0 kg CO2 eq.**
Carbon footprint of the use phase [B2, B3, B4, B6]	**15 kg CO2 eq.**
Carbon footprint of the end-of-life phase [C1 to C4]	**0 kg CO2 eq.**
Environmental Disclosure	**Product Environmental Profile**

Use Better

Materials and Substances

Packaging made with recycled cardboard	**No**
Packaging without single use plastic	**Yes**
EU RoHS Directive	**Compliant By Exemption**
REACh Regulation	**Reference contains Substances of Very High Concern above the threshold**
California proposition 65	**WARNING: This product can expose you to chemicals including: Lead and lead compounds, which is known to the State of California to cause cancer and birth defects or other reproductive harm. For more information go to www.P65Warnings.ca.gov**
PVC free	**No**

Use Longer

Lifetime extension

Repair	**No**

Use Again

Repack and remanufacture

Recyclability potential, in %	**0**
Circularity Profile	**End of Life Information**
Take-back	**No**

Technical Illustration
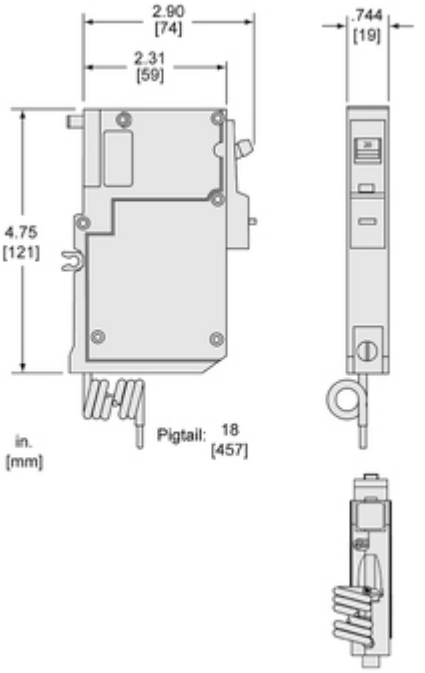
Dimensions