# Product data sheet

Specifications

## Mini circuit breaker, QO, 15A, 1 pole, 120VAC, 10kA, plug in, 6mA grd fault A, pigtail, aux switch 1B [TAA]

QO115GFI1201

**Product availability: Non-Stock - Not normally stocked in distribution facility**

## Main

| | |
|---|---|
| **Product** | Miniature circuit-breaker |
| **Range** | QO |
| **Current Rating** | 15 A |
| **Voltage Rating** | 120 V AC |
| **Mounting Type** | Plug-in |
| **Number of Poles** | 1P |
| **Circuit Breaker Type** | Ground fault protecting class A 6 mA |
| **Ratings** | Not rated |
| **Electrical Connection** | Pressure plate |
| **Options** | Auxiliary switch 120 V AC 1B |

## Complementary

| | |
|---|---|
| **Interrupt Rating** | 10 kA 120 V AC |
| **Number of Panel Spaces** | 2 |
| **Wire Size** | AWG 14...AWG 8 copper<br>AWG 12...AWG 8 aluminium |
| **Tightening Torque** | 35.4 lbf.in (4 N.m)<br>40.7 lbf.in (4.6 N.m) 0.006…0.03 in² (4…20 mm²) (AWG 12...AWG 4) |
| **Height** | 4.1 in (105 mm) |
| **Width** | 1.5 in (38 mm) |
| **Depth** | 2.9 in (74 mm) |
| **Product Weight** | 0.701 lb(US) (0.318 kg) |

## Environment

| | |
|---|---|
| **Certifications** | UL Listed<br>CSA |
| **Ambient Rating** | 104 °F (40 °C) |

## Ordering and shipping details

| | |
|---|---|
| **Category** | US1DE2A00003 |
| **Discount Schedule** | DE2A |
| **GTIN** | 3606486145111 |
| **Returnability** | No |

Price is “List Price” and may be subject to a trade discount – check with your local distributor or retailer for actual price.

Disclaimer: This documentation is not intended as a substitute for and is not to be used for determining suitability or reliability of these products for specific user applications

| | |
|---|---|
| **Country of origin** | MX |

## Packing Units

| | |
|---|---|
| **Unit Type of Package 1** | PCE |
| **Nbr. of units in pkg.** | 1 |
| **Package 1 Height** | 4.1 in (10.5 cm) |
| **Package 1 Width** | 1.5 in (3.8 cm) |
| **Package 1 Length** | 2.9 in (7.4 cm) |
| **Package weight(Lbs)** | 11.200 oz (317.515 g) |

## Compliance

| | |
|---|---|
| **Compliance** | TAA Compliant |

## Contractual warranty

| | |
|---|---|
| **Warranty (in months)** | 18 |

## Environmental Data

Schneider Electric aims to achieve Net Zero status by 2050 through supply chain partnerships, lower impact materials, and circularity via our ongoing “Use Better, Use Longer, Use Again” campaign to extend product lifetimes and recyclability.

Environmental Data explained

How we assess product sustainability

### Environmental footprint

| | |
|---|---|
| Total lifecycle Carbon footprint | **17 kg CO2 eq.** |
| Carbon footprint of the manufacturing phase [A1 to A3] | **2 kg CO2 eq.** |
| Carbon footprint of the distribution phase [A4] | **0.1 kg CO2 eq.** |
| Carbon footprint of the installation phase [A5] | **0 kg CO2 eq.** |
| Carbon footprint of the use phase [B2, B3, B4, B6] | **15 kg CO2 eq.** |
| Carbon footprint of the end-of-life phase [C1 to C4] | **0.1 kg CO2 eq.** |
| Environmental Disclosure | **Product Environmental Profile** |

## Use Better

### Materials and Substances

| | |
|---|---|
| Packaging made with recycled cardboard | **No** |
| Packaging without single use plastic | **Yes** |
| EU RoHS Directive | **Compliant By Exemption** |
| REACh Regulation | **Reference contains Substances of Very High Concern above the threshold** |
| California proposition 65 | **WARNING: This product can expose you to chemicals including: Lead and lead compounds, which is known to the State of California to cause cancer and birth defects or other reproductive harm. For more information go to www.P65Warnings.ca.gov** |

## Use Longer

### Lifetime extension

| | |
|---|---|
| Repair | **No** |

## Use Again

### Repack and remanufacture

| | |
|---|---|
| Recyclability potential, in % | **0** |
| Circularity Profile | **End of Life Information** |
| Take-back | **No** |

Technical Illustration
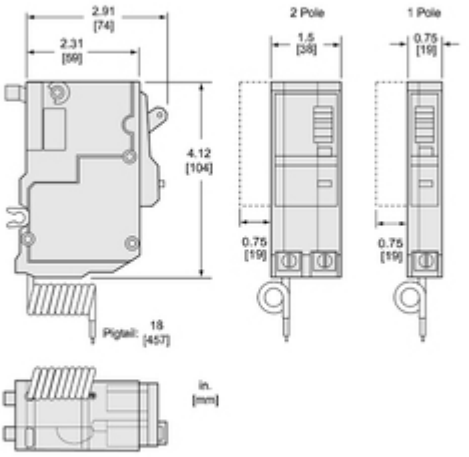
**Dimensions**