Product data sheet

Specifications

Compartmentalized Meter-Pak, 3 sockets, horn bypass, 5 jaws, 300A bus, 125A max breaker rating, ringless

MPCH33125

Product availability: Stock - Normally stocked in distribution facility

Main

Socket Rating	125 A
Main Type	Main Lugs
Number of Jaws	5
Number of Meter Sockets	3
Socket Type	Ringless

Complementary

Main Rating	300 A
Bus Rating	300 A
Certifications	UL Listed
Bypass Type	Horn bypass
Enclosure Material	Steel
Enclosure Rating	NEMA 3R
Mounting	Surface
Phase	1 phase
Wire Configuration	3-wire
Height	43.41 in (1102.61 mm)
Width	32.44 in (823.98 mm)
Depth	8.28 in (210.31 mm)

Ordering and shipping details

Category	US10DE400021
Discount Schedule	0DE4
GTIN	3606487955948
Returnability	Yes
Country of origin	MX

Packing Units

Unit Type of Package 1	PCE
Nbr. of units in pkg.	1
Package 1 Height	8.28 in (21.03 cm)

Price is “List Price” and may be subject to a trade discount – check with your local distributor or retailer for actual price.

Disclaimer: This documentation is not intended as a substitute for and is not to be used for determining suitability or reliability of these products for specific user applications

Package 1 Width	32.4 in (82.4 cm)
Package 1 Length	43.41 in (110.26 cm)
Package weight(Lbs)	95.00 lb(US) (43.09 kg)

Environmental Data

Schneider Electric aims to achieve Net Zero status by 2050 through supply chain partnerships, lower impact materials, and circularity via our ongoing “Use Better, Use Longer, Use Again” campaign to extend product lifetimes and recyclability.

Environmental Data explained

How we assess product sustainability

Environmental footprint

Total lifecycle Carbon footprint	**326 kg CO2 eq.**
Carbon footprint of the manufacturing phase [A1 to A3]	**263 kg CO2 eq.**
Carbon footprint of the distribution phase [A4]	**5 kg CO2 eq.**
Carbon footprint of the installation phase [A5]	**0 kg CO2 eq.**
Carbon footprint of the use phase [B2, B3, B4, B6]	**0 kg CO2 eq.**
Carbon footprint of the end-of-life phase [C1 to C4]	**58 kg CO2 eq.**
Environmental Disclosure	**Product Environmental Profile**

Use Better

Materials and Substances

Packaging made with recycled cardboard	**No**
Packaging without single use plastic	**No**
EU RoHS Directive	**Compliant**
REACh Regulation	**Free of Substances of Very High Concern above the threshold**
California proposition 65	**WARNING: This product can expose you to chemicals including: Nickel (Metallic), which is known to the State of California to cause cancer. For more information go to www.P65Warnings.ca.gov**
PVC free	**No**

Use Longer

Lifetime extension

Repair	**No**

Use Again

Repack and remanufacture

Recyclability potential, in %	**95**
Circularity Profile	**No need of specific recycling operations**
Removable battery	**No**
Take-back	**No**

Technical Illustration

Dimensions

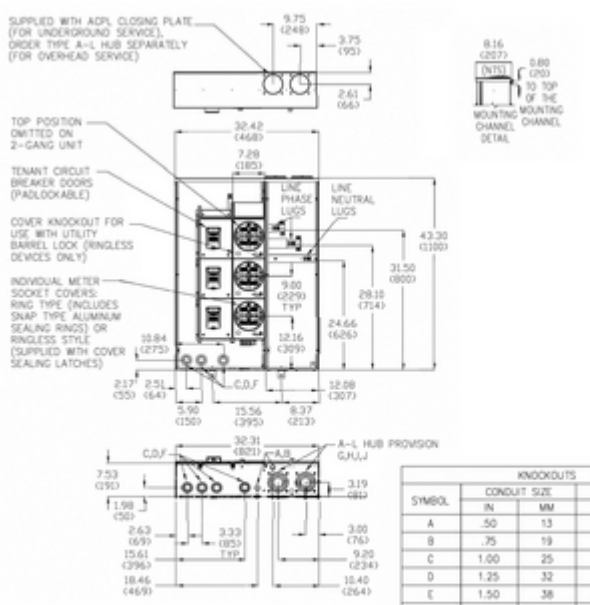

KNOCKOUTS				
SYMBOL	CONDUIT SIZE		HOLE DIAMETER	
	IN	MM	IN	MM
A	.50	13	.88	22
B	.75	19	1.25	32
C	1.00	25	1.38	35
D	1.25	32	1.75	44
E	1.50	38	2.00	51
F	2.00	51	2.50	64
G	2.50	64	3.00	76
H	3.00	76	3.63	92
I	3.50	89	4.13	105
J	4.00	102	4.63	118

Technical Illustration

Wiring diagram

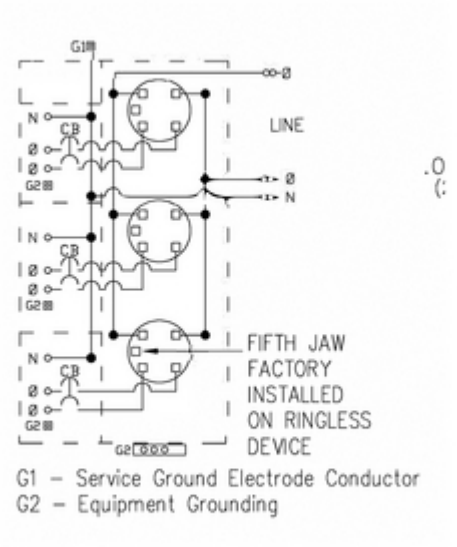

Image of product / Alternate images
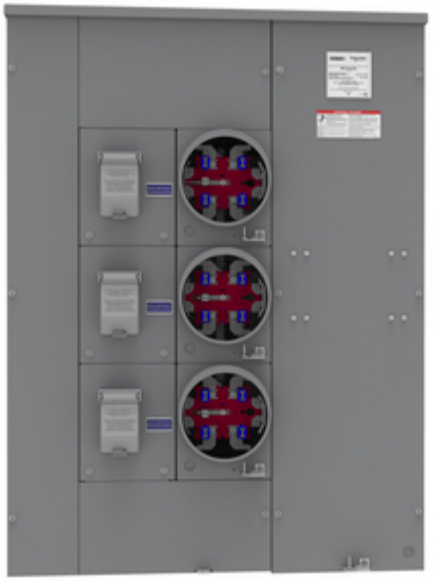
Alternative