Product data sheet

Specifications

Circuit breaker, LA, 125A, 3 pole, 600VAC, 22kA, 250VDC, 10kA, lugs, thermal magnetic

LAL36125

Product availability: Non-Stock - Not normally stocked in distribution facility

Main

Product or Component Type	Circuit breaker
Trip Unit Technology	Thermal-magnetic

Complementary

Line Rated Current	125 A
Number of Poles	3P
Mounting Mode	Unit mount
Magnetic Hold Current	625 A
Magnetic Tripping Current	1250 A
Electrical connection	Lugs, load Lugs, line
Terminal identifier	AL400LA
Tightening torque	115.06 lbf.in (13 N.m) 0.07…0.5 in² (42…304 mm²) (AWG 1...600 kcmil) 115.06 lbf.in (13 N.m) 0.07…0.2 in² (42…127 mm²) (AWG 1...250 kcmil)
Height	11 in (279.4 mm)
Width	6 in (152.4 mm)
Depth	5.84 in (148.34 mm)
Circuit breaker application	HACR rated

Environment

Certifications	IEC CSA UL Listed

Ordering and shipping details

Category	US10DE200935
Discount Schedule	0DE2
GTIN	785901848400
Returnability	Yes
Country of origin	MX

Packing Units

Unit Type of Package 1	PCE
Nbr. of units in pkg.	1

Price is “List Price” and may be subject to a trade discount – check with your local distributor or retailer for actual price.

Disclaimer: This documentation is not intended as a substitute for and is not to be used for determining suitability or reliability of these products for specific user applications

Package 1 Height	8.438 in (21.433 cm)
Package 1 Width	11.125 in (28.258 cm)
Package 1 Length	17.125 in (43.498 cm)
Package weight(Lbs)	15.906 lb(US) (7.215 kg)

Contractual warranty

Warranty (in months)	18

Environmental Data

Schneider Electric aims to achieve Net Zero status by 2050 through supply chain partnerships, lower impact materials, and circularity via our ongoing “Use Better, Use Longer, Use Again” campaign to extend product lifetimes and recyclability.

Environmental Data explained

How we assess product sustainability

Environmental footprint

Total lifecycle Carbon footprint	**805 kg CO2 eq.**
Carbon footprint of the manufacturing phase [A1 to A3]	**50 kg CO2 eq.**
Carbon footprint of the distribution phase [A4]	**2 kg CO2 eq.**
Carbon footprint of the installation phase [A5]	**2 kg CO2 eq.**
Carbon footprint of the use phase [B2, B3, B4, B6]	**739 kg CO2 eq.**
Carbon footprint of the end-of-life phase [C1 to C4]	**12 kg CO2 eq.**
Environmental Disclosure	**Product Environmental Profile**

Use Better

Materials and Substances

Packaging made with recycled cardboard	**Yes**
Packaging without single use plastic	**Yes**
SCIP Number	**45160aaa-1457-439f-bca7-7bd5246ac23e**
EU RoHS Directive	**Compliant By Exemption**
REACh Regulation	**Reference contains Substances of Very High Concern above the threshold**
California proposition 65	**WARNING: This product can expose you to chemicals including: DINP, which is known to the State of California to cause cancer, and DIDP, which is known to the State of California to cause birth defects or other reproductive harm. For more information go to www.P65Warnings.ca.gov**
Halogen content performance	**Halogen free plastic parts product**
PVC free	**Yes**

Use Longer

Lifetime extension

Repair	**No**

Use Again

Repack and remanufacture

Recyclability potential, in %	**58**
Circularity Profile	**End of Life Information**
Take-back	**No**

WEEE Label	The product must be disposed on European Union markets following specific waste collection and never end up in rubbish bins.

Technical Illustration
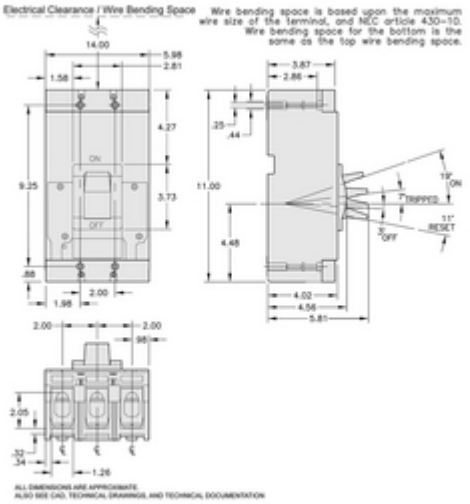
Dimensions