Product data sheet

Specifications

Mini circuit breaker, Homeline, 35A, 2 pole, 120/240VAC, 10kA AIR, standard type, plug in, UL

HOM235CP

Product availability: Stock - Normally stocked in distribution facility

Main

Product	Miniature circuit-breaker
Range	Homeline
Current Rating	35 A
Certifications	UL Listed
Voltage Rating	120/240 V AC
Mounting Type	Plug-in
Number of Poles	2P
Short Circuit Current Rating	10 kA
Number of Spaces	2
Circuit Breaker Type	Standard
Ratings	HACR rated
Electrical Connection	Box lugs
Wire Size	1 x AWG 8...AWG 2 (aluminium/copper)
Type of Packing	Consumer packaging

Complementary

Tightening torque	40.7 lbf.in (4.6 N.m) (AWG 8...AWG 2)
Height	3.13 in (79.50 mm)
Width	2 in (50.8 mm)
Depth	2.98 in (75.69 mm)

Environment

Ambient Air Temperature for Operation	104 °F (40 °C)

Ordering and shipping details

Category	US1DE3D00046
Discount Schedule	DE3D
GTIN	785901633167
Returnability	Yes
Country of origin	MX

Packing Units

Price is “List Price” and may be subject to a trade discount – check with your local distributor or retailer for actual price.

Disclaimer: This documentation is not intended as a substitute for and is not to be used for determining suitability or reliability of these products for specific user applications

Unit Type of Package 1	PCE
Nbr. of units in pkg.	1
Package 1 Height	2.50 in (6.35 cm)
Package 1 Width	1.900 in (4.826 cm)
Package 1 Length	3.100 in (7.874 cm)
Package weight(Lbs)	11.2 oz (318.0 g)
Unit Type of Package 2	BB1
Number of Units in Package 2	5
Package 2 Height	3.200 in (8.128 cm)
Package 2 Width	1.900 in (4.826 cm)
Package 2 Length	10.100 in (25.654 cm)
Package 2 Weight	3.609 lb(US) (1.637 kg)
Unit Type of Package 3	CAR
Number of Units in Package 3	50
Package 3 Height	10.50 in (26.67 cm)
Package 3 Width	6.800 in (17.272 cm)
Package 3 Length	16.600 in (42.164 cm)
Package 3 Weight	36.84 lb(US) (16.71 kg)

Contractual warranty

Warranty (in months)	18

Environmental Data

Schneider Electric aims to achieve Net Zero status by 2050 through supply chain partnerships, lower impact materials, and circularity via our ongoing “Use Better, Use Longer, Use Again” campaign to extend product lifetimes and recyclability.

Environmental Data explained

How we assess product sustainability

Environmental footprint

Total lifecycle Carbon footprint	**23 kg CO2 eq.**
Carbon footprint of the manufacturing phase [A1 to A3]	**1 kg CO2 eq.**
Carbon footprint of the distribution phase [A4]	**0.1 kg CO2 eq.**
Carbon footprint of the installation phase [A5]	**0 kg CO2 eq.**
Carbon footprint of the use phase [B2, B3, B4, B6]	**22 kg CO2 eq.**
Carbon footprint of the end-of-life phase [C1 to C4]	**0.1 kg CO2 eq.**
Environmental Disclosure	**Product Environmental Profile**

Use Better

Materials and Substances

Packaging made with recycled cardboard	**Yes**
Packaging without single use plastic	**Yes**
EU RoHS Directive	**Compliant**
REACh Regulation	**Reference contains Substances of Very High Concern above the threshold**
California proposition 65	**WARNING: This product can expose you to chemicals including: Lead and lead compounds, which is known to the State of California to cause cancer and birth defects or other reproductive harm. For more information go to www.P65Warnings.ca.gov**

Use Longer

Lifetime extension

Repair	**No**

Use Again

Repack and remanufacture

Circularity Profile	**No need of specific recycling operations**
Take-back	**No**

Technical Illustration

Dimensions

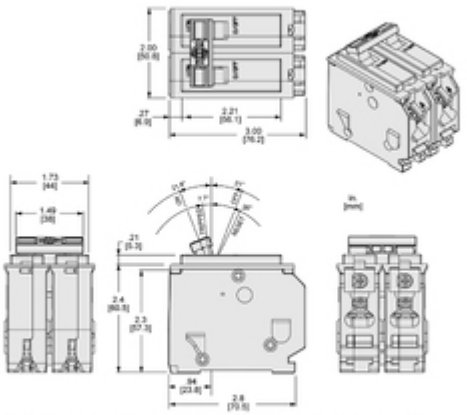

All dimensions are approximate. Also refer to technical drawings and documentation.

Image of product / Alternate images

Alternative