Product data sheet

Specifications

Transformer, Type T, industrial control, 750VA, 1 phase, 240x480V primary, 120/240V secondary, 115C rise

9070T750D31

Product availability: Stock - Normally stocked in distribution facility

Main

Product Type	Industrial Control Transformer
Type	T

Complementary

Number of Phases	1 phase
Power Rating	750 VA UL 750 VA CSA 750 VA NOM 500 VA CE
Primary to Secondary Voltage	240 x 480 V 120/240 V 230 x 460 V 115/230 V 220 x 440 V 110/220 V
Temperature Rise	115 °C
Electrical Connection	Screw clamp terminals
Height	4.51 in (114.55 mm)
Width	5.25 in (133.35 mm)
Depth	5.61 in (142.49 mm)
Material	Copper: winding
Fingersafe Cover Compatibility	FSC2

Environment

Certifications	CSA file LR37055 guide 184-N-90 UL listed file E61239
Enclosure Type	Not rated (open device)
Insulation Temperature	356 °F (180 °C)

Ordering and shipping details

Category	US10CP816201
Discount Schedule	0CP8
GTIN	785901845591
Returnability	Yes
Country of origin	MX

Packing Units

Price is “List Price” and may be subject to a trade discount – check with your local distributor or retailer for actual price.

Disclaimer: This documentation is not intended as a substitute for and is not to be used for determining suitability or reliability of these products for specific user applications

Unit Type of Package 1	PCE
Nbr. of units in pkg.	1
Package 1 Height	7.000 in (17.780 cm)
Package 1 Width	8.200 in (20.828 cm)
Package 1 Length	8.800 in (22.352 cm)
Package weight(Lbs)	17.871 lb(US) (8.106 kg)
Unit Type of Package 2	PAL
Number of Units in Package 2	80
Package 2 Height	40.000 in (101.600 cm)
Package 2 Width	40.000 in (101.600 cm)
Package 2 Length	48.000 in (121.920 cm)
Package 2 Weight	1430.0010 lb(US) (648.637 kg)

Contractual warranty

Warranty (in months)	18

Environmental Data

Schneider Electric aims to achieve Net Zero status by 2050 through supply chain partnerships, lower impact materials, and circularity via our ongoing “Use Better, Use Longer, Use Again” campaign to extend product lifetimes and recyclability.

Environmental Data explained

How we assess product sustainability

Use Better

Materials and Substances

Packaging made with recycled cardboard	**Yes**
Packaging without single use plastic	**No**
SCIP Number	**Cc71a744-5621-4411-9c01-0b5589085e26**
EU RoHS Directive	**Compliant By Exemption**
REACh Regulation	**Reference contains Substances of Very High Concern above the threshold**
California proposition 65	**WARNING: This product can expose you to chemicals including: Phenyl glycidyl ether, which is known to the State of California to cause cancer and birth defects or other reproductive harm. For more information go to www.P65Warnings.ca.gov**
PVC free	**Yes**

Use Longer

Lifetime extension

Repair	**No**

Use Again

Repack and remanufacture

Take-back	**No**
WEEE Label	**The product must be disposed on European Union markets following specific waste collection and never end up in rubbish bins.**

Technical Illustration

Dimensions

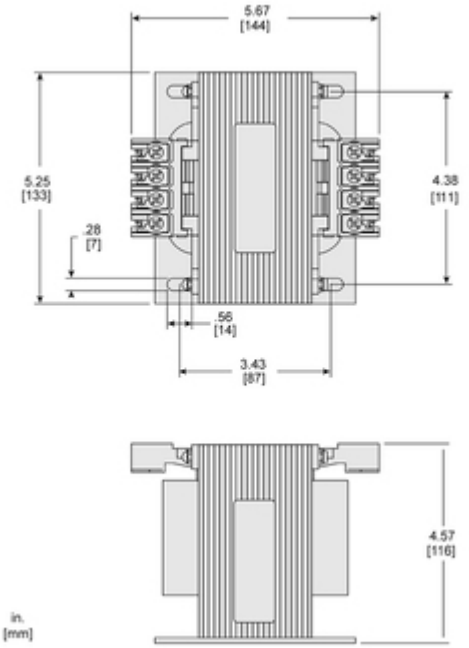

Technical Illustration

Wiring diagram

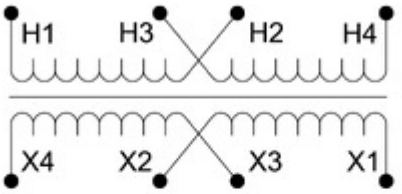

Options

Voltage Code	Voltages		Connections	
	Primary	Secondary	Primary	Secondary
D31	220 x 440 230 x 460 240 x 480	110/220 115/230 120/240	220 or 230 or 240: Connect to H1 and H4 Jumper H1 with H3 Jumper H2 with H4 440 or 460 or 480: Connect to H1 and H4 Jumper H2 with H3	110 or 115 or 120: Connect to X1 and X4 Jumper X1 with X3 Jumper X2 with X4 220 or 230 or 240: Connect to X1 and X4 Jumper X2 with X3
D55	110 x 220 115 x 230 120 x 240	110 x 220 115 x 230 120 x 240	110 or 115 or 120: Connect to H1 and H4 Jumper H1 with H3 Jumper H2 with H4 220 or 230 or 240: Connect to H1 and H4 Jumper H2 with H3	110 or 115 or 120: Connect to X1 and X4 Jumper X1 with X3 Jumper X2 with X4 220 or 230 or 240: Connect to X1 and X4 Jumper X2 with X3

REFER TO TECHNICAL DOCUMENTATION FOR COMPLETE INFORMATION.