# Product data sheet

Specifications

## Transformer, Type T, industrial control, 500VA, 1 phase, 277V primary, 120V secondary, 115C rise

9070T500D4

**Product availability: Stock - Normally stocked in distribution facility**

## Main

| | |
|---|---|
| **Product Type** | Industrial Control Transformer |
| **Type** | T |

## Complementary

| | |
|---|---|
| **Number of Phases** | 1 phase |
| **Power Rating** | 500 VA UL<br>500 VA CSA<br>500 VA NOM<br>300 VA CE |
| **Primary to Secondary Voltage** | 277 V 120 V |
| **Temperature Rise** | 115 °C |
| **Electrical Connection** | Screw clamp terminals |
| **Height** | 3.84 in (97.54 mm) |
| **Width** | 4.5 in (114.3 mm) |
| **Depth** | 5.49 in (139.45 mm) |
| **Material** | Copper: winding |
| **Fingersafe Cover Compatibility** | FSC2 |

## Environment

| | |
|---|---|
| **Certifications** | UL listed file E61239<br>CSA file LR37055 guide 184-N-90 |
| **Enclosure Type** | Not rated (open device) |
| **Insulation Temperature** | 356 °F (180 °C) |

## Ordering and shipping details

| | |
|---|---|
| **Category** | US10CP816201 |
| **Discount Schedule** | 0CP8 |
| **GTIN** | 785901905653 |
| **Returnability** | Yes |
| **Country of origin** | MX |

## Packing Units

| | |
|---|---|
| **Unit Type of Package 1** | PCE |

Price is “List Price” and may be subject to a trade discount – check with your local distributor or retailer for actual price.

Disclaimer: This documentation is not intended as a substitute for and is not to be used for determining suitability or reliability of these products for specific user applications

| | |
|---|---|
| **Nbr. of units in pkg.** | 1 |
| **Package 1 Height** | 6.400 in (16.256 cm) |
| **Package 1 Width** | 6.600 in (16.764 cm) |
| **Package 1 Length** | 7.800 in (19.812 cm) |
| **Package weight(Lbs)** | 12.390 lb(US) (5.620 kg) |

## Contractual warranty

| | |
|---|---|
| **Warranty (in months)** | 18 |

## Environmental Data

Schneider Electric aims to achieve Net Zero status by 2050 through supply chain partnerships, lower impact materials, and circularity via our ongoing “Use Better, Use Longer, Use Again” campaign to extend product lifetimes and recyclability.

Environmental Data explained

How we assess product sustainability

### Use Better

#### Materials and Substances

| | |
|---|---|
| Packaging made with recycled cardboard | **Yes** |
| Packaging without single use plastic | **No** |
| SCIP Number | **Cc71a744-5621-4411-9c01-0b5589085e26** |
| EU RoHS Directive | **Compliant By Exemption** |
| REACh Regulation | **Reference contains Substances of Very High Concern above the threshold** |
| California proposition 65 | **WARNING: This product can expose you to chemicals including: Phenyl glycidyl ether, which is known to the State of California to cause cancer and birth defects or other reproductive harm. For more information go to www.P65Warnings.ca.gov** |
| PVC free | **Yes** |

### Use Longer

#### Lifetime extension

| | |
|---|---|
| Repair | **No** |

### Use Again

#### Repack and remanufacture

| | |
|---|---|
| Take-back | **No** |

Technical Illustration

**Dimensions**

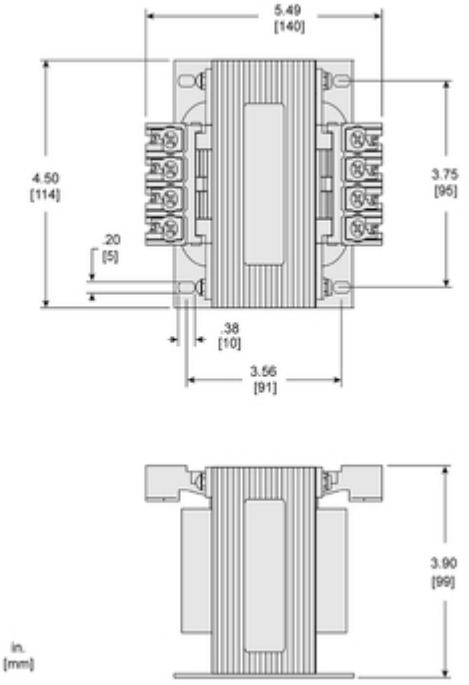

Technical Illustration

## Wiring diagram

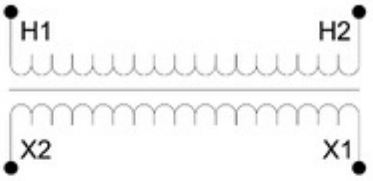


**Options**

| Voltage Code | Voltages | | Connections | |
|---|---|---|---|---|
| | Primary | Secondary | Primary | Secondary |
| D3 | 208 | 120 | Connect to H1 and H2 | Connect to X1 and X2 |
| D4 | 277 | 120 | | |
| D5 | 550<br>575<br>600 | 110<br>115<br>120 | | |
| D6 | 380 | 110 | | |
| D17 | 415 | 110 | | |
| D24 | 110<br>115<br>120 | 110<br>115<br>120 | | |
| D93 | 200 | 115 | | |
| D103 | 400 | 120 | | |

REFER TO TECHNICAL DOCUMENTATION FOR COMPLETE INFORMATION.