Product data sheet

Specifications

Transformer, Type T, industrial control, 500VA, 1 phase, 120V primary, 12/24V secondary, 115C rise

9070T500D13

Product availability: Stock - Normally stocked in distribution facility

Main

Product Type	Industrial Control Transformer
Type	T

Complementary

Number of Phases	1 phase
Power Rating	500 VA UL 500 VA CSA 500 VA NOM 300 VA CE
Primary to Secondary Voltage	120 V 12/24 V
Temperature Rise	115 °C
Electrical Connection	Screw clamp terminals
Height	3.84 in (97.54 mm)
Width	4.5 in (114.3 mm)
Depth	5.49 in (139.45 mm)
Material	Copper: winding
Fingersafe Cover Compatibility	FSC2

Environment

Certifications	UL listed file E61239 CSA file LR37055 guide 184-N-90
Enclosure Type	Not rated (open device)
Insulation Temperature	356 °F (180 °C)

Ordering and shipping details

Category	US10CP816201
Discount Schedule	0CP8
GTIN	785901905363
Returnability	Yes
Country of origin	MX

Packing Units

Unit Type of Package 1	PCE

Price is “List Price” and may be subject to a trade discount – check with your local distributor or retailer for actual price.

Disclaimer: This documentation is not intended as a substitute for and is not to be used for determining suitability or reliability of these products for specific user applications

Nbr. of units in pkg.	1
Package 1 Height	6.300 in (16.002 cm)
Package 1 Width	6.800 in (17.272 cm)
Package 1 Length	7.700 in (19.558 cm)
Package weight(Lbs)	12.339 lb(US) (5.597 kg)
Unit Type of Package 2	PAL
Number of Units in Package 2	150
Package 2 Height	40.000 in (101.600 cm)
Package 2 Width	40.000 in (101.600 cm)
Package 2 Length	48.000 in (121.920 cm)
Package 2 Weight	1851.0005 lb(US) (839.599 kg)

Contractual warranty

Warranty (in months)	18

Environmental Data

Schneider Electric aims to achieve Net Zero status by 2050 through supply chain partnerships, lower impact materials, and circularity via our ongoing “Use Better, Use Longer, Use Again” campaign to extend product lifetimes and recyclability.

Environmental Data explained

How we assess product sustainability

Use Better

Materials and Substances

Packaging made with recycled cardboard	**Yes**
Packaging without single use plastic	**No**
SCIP Number	**Cc71a744-5621-4411-9c01-0b5589085e26**
EU RoHS Directive	**Compliant By Exemption**
REACh Regulation	**Reference contains Substances of Very High Concern above the threshold**
California proposition 65	**WARNING: This product can expose you to chemicals including: Phenyl glycidyl ether, which is known to the State of California to cause cancer and birth defects or other reproductive harm. For more information go to www.P65Warnings.ca.gov**
PVC free	**Yes**

Use Longer

Lifetime extension

Repair	**No**

Use Again

Repack and remanufacture

Take-back	**No**

Technical Illustration

Dimensions

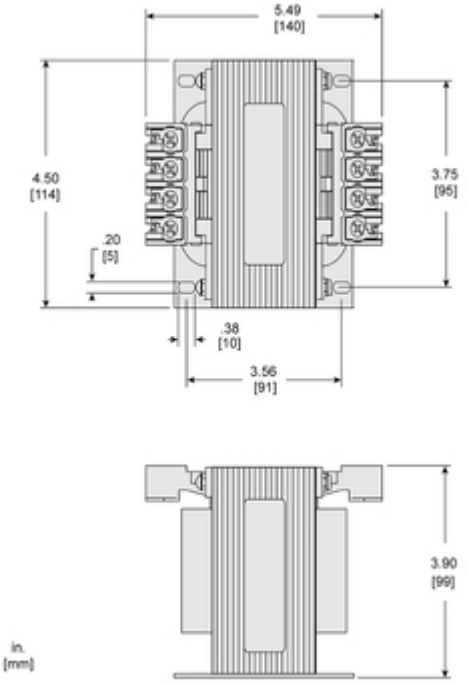

Technical Illustration

Wiring diagram

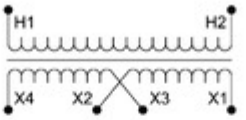

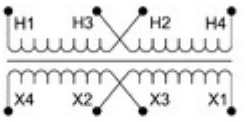

Options

Voltage Code	Voltages		Connections	
	Primary	Secondary	Primary	Secondary
D13	120	12/24	Connect to H1 and H2	12: Connect to X1 and X4 Jumper X1 with X3 Jumper X2 with X4 24: Connect to X1 and X4 Jumper X2 with X3
D36	600		Connect to H1 and H2	
D54	120 x 240		120: Connect to H1 and H4 Jumper H1 with H3 Jumper H2 with H4 240: Connect to H1 and H4 Jumper H2 with H3	
D59	240 x 480		240: Connect to H1 and H4 Jumper H1 with H3 Jumper H2 with H4 480: Connect to H1 and H4 Jumper H2 with H3	

REFER TO TECHNICAL DOCUMENTATION FOR COMPLETE INFORMATION.