Product data sheet

Specifications

Transformer, Type T, industrial control, 300VA, 1 phase, 208/230/460V primary, 115V secondary, 80C rise

9070T300D20

Product availability: Stock - Normally stocked in distribution facility

Main

Product Type	Industrial Control Transformer
Type	T

Complementary

Number of Phases	1 phase
Power Rating	300 VA UL 300 VA CSA 300 VA NOM 200 VA CE
Primary to Secondary Voltage	208/230/460 V 115 V
Temperature Rise	80 °C
Electrical Connection	Screw clamp terminals
Height	3.84 in (97.54 mm)
Width	4.5 in (114.3 mm)
Depth	5.11 in (129.79 mm)
Material	Copper: winding
Fingersafe Cover Compatibility	FSC2

Environment

Certifications	UL listed file E61239 CSA file LR37055 guide 184-N-90
Enclosure Type	Not rated (open device)
Insulation Temperature	266 °F (130 °C)

Ordering and shipping details

Category	US10CP816206
Discount Schedule	0CP8
GTIN	785901905158
Returnability	Yes
Country of origin	US

Packing Units

Unit Type of Package 1	PCE

Price is “List Price” and may be subject to a trade discount – check with your local distributor or retailer for actual price.

Disclaimer: This documentation is not intended as a substitute for and is not to be used for determining suitability or reliability of these products for specific user applications

Nbr. of units in pkg.	1
Package 1 Height	6.400 in (16.256 cm)
Package 1 Width	6.700 in (17.018 cm)
Package 1 Length	7.800 in (19.812 cm)
Package weight(Lbs)	10.201 lb(US) (4.627 kg)
Unit Type of Package 2	PAL
Number of Units in Package 2	150
Package 2 Height	40.0 in (101.6 cm)
Package 2 Width	40.0 in (101.6 cm)
Package 2 Length	48.00 in (121.92 cm)
Package 2 Weight	1621.46 lb(US) (735.48 kg)

Contractual warranty

Warranty (in months)	18

Environmental Data

Schneider Electric aims to achieve Net Zero status by 2050 through supply chain partnerships, lower impact materials, and circularity via our ongoing “Use Better, Use Longer, Use Again” campaign to extend product lifetimes and recyclability.

Environmental Data explained

How we assess product sustainability

Use Better

Materials and Substances

Packaging made with recycled cardboard	**Yes**
Packaging without single use plastic	**No**
SCIP Number	**Cc71a744-5621-4411-9c01-0b5589085e26**
EU RoHS Directive	**Compliant By Exemption**
REACh Regulation	**Reference contains Substances of Very High Concern above the threshold**
California proposition 65	**WARNING: This product can expose you to chemicals including: Phenyl glycidyl ether, which is known to the State of California to cause cancer and birth defects or other reproductive harm. For more information go to www.P65Warnings.ca.gov**
PVC free	**Yes**

Use Longer

Lifetime extension

Repair	**No**

Use Again

Repack and remanufacture

Take-back	**No**

Technical Illustration

Dimensions

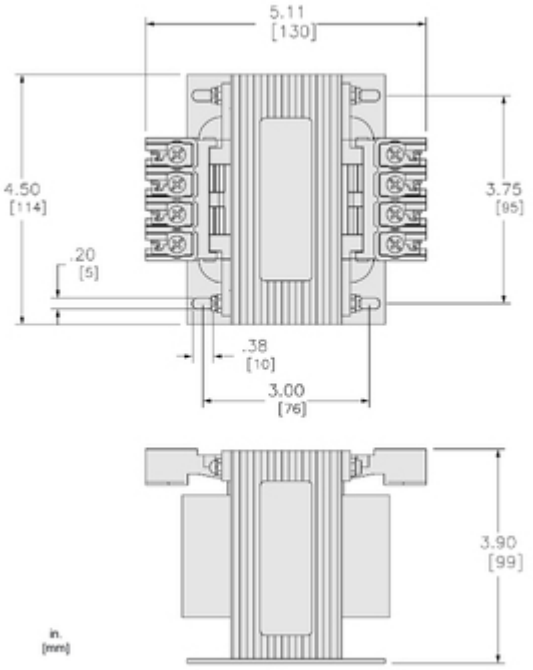

Technical Illustration

Wiring diagram

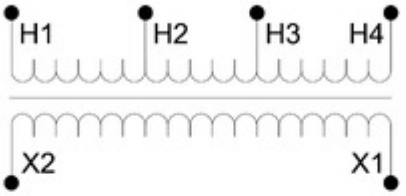

Options

Voltage Code	Voltages		Connections	
	Primary	Secondary	Primary	Secondary
D20	208/230/460	115	208: Connect to H1 and H2 230: Connect to H1 and H3 460: Connect to H1 and H4	Connect to X1 and X2

REFER TO TECHNICAL DOCUMENTATION FOR COMPLETE INFORMATION.