Product data sheet

Specifications

Transformer, Type T, industrial control, 200VA, 1 phase, 600V primary, 12/24V secondary, 80C rise

9070T200D36

Discontinued

Discontinued on: Jan 2, 2024

Product availability: Non-Stock - Not normally stocked in distribution facility

Main

Product Type	Industrial Control Transformer
Type	T

Complementary

Number of Phases	1 phase
Power Rating	200 VA UL 200 VA CSA 200 VA NOM 200 VA CE
Primary to Secondary Voltage	600 V 12/24 V
Temperature Rise	80 °C
Electrical Connection	Screw clamp terminals
Height	3.2 in (81.3 mm)
Width	3.75 in (95.25 mm)
Depth	3.59 in (91.19 mm)
Material	Copper: winding
Fingersafe Cover Compatibility	FSC1

Environment

Certifications	CSA file LR37055 guide 184-N-90 UL listed file E61239
Enclosure Type	Not rated (open device)
Insulation Temperature	266 °F (130 °C)

Ordering and shipping details

Category	US10CP816200
Discount Schedule	0CP8
GTIN	785901689089
Returnability	No
Country of origin	US

Price is “List Price” and may be subject to a trade discount – check with your local distributor or retailer for actual price.

Disclaimer: This documentation is not intended as a substitute for and is not to be used for determining suitability or reliability of these products for specific user applications

Packing Units

Unit Type of Package 1	PCE
Nbr. of units in pkg.	1
Package 1 Height	3.50 in (8.89 cm)
Package 1 Width	3.88 in (9.855 cm)
Package 1 Length	4.00 in (10.16 cm)
Package weight(Lbs)	5.60 lb(US) (2.54 kg)

Contractual warranty

Warranty	10 Years

Environmental Data

Schneider Electric aims to achieve Net Zero status by 2050 through supply chain partnerships, lower impact materials, and circularity via our ongoing “Use Better, Use Longer, Use Again” campaign to extend product lifetimes and recyclability.

Environmental Data explained

How we assess product sustainability

Environmental footprint

Environmental Disclosure	Product Environmental Profile

Use Better

Materials and Substances

Packaging made with recycled cardboard	No
Packaging without single use plastic	No
EU RoHS Directive	Compliant with Exemptions
REACh Regulation	REACh Declaration
California proposition 65	WARNING: This product can expose you to chemicals including: Phenyl Glycidyl Ether, which is known to the State of California to cause cancer and birth defects or other reproductive harm. For more information go to www.P65Warnings.ca.gov
PVC free	Yes

Use Again

Repack and remanufacture

Circularity Profile	No need of specific recycling operations

Technical Illustration

Dimensions

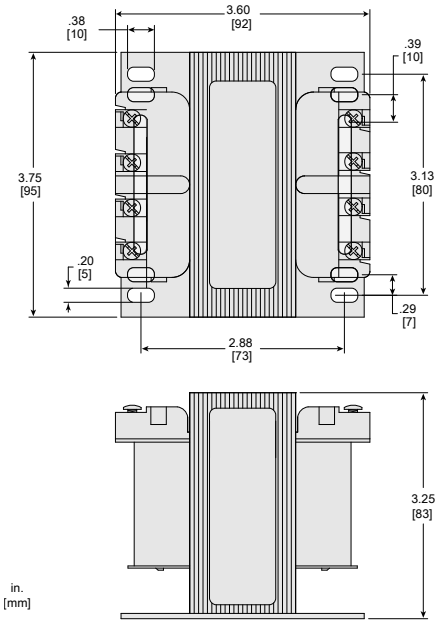

Technical Illustration

Wiring diagram

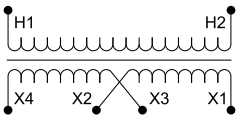

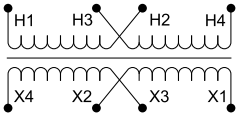

Options

Voltage Code	Voltages		Connections	
	Primary	Secondary	Primary	Secondary
D13	120	12/24	Connect to H1 and H2	12: Connect to X1 and X4 Jumper X1 with X3 Jumper X2 with X4 24: Connect to X1 and X4 Jumper X2 with X3
D36	600		Connect to H1 and H2	
D54	120 x 240		120: Connect to H1 and H4 Jumper H1 with H3 Jumper H2 with H4 240: Connect to H1 and H4 Jumper H2 with H3	
D59	240 x 480		240: Connect to H1 and H4 Jumper H1 with H3 Jumper H2 with H4 480: Connect to H1 and H4 Jumper H2 with H3	

REFER TO TECHNICAL DOCUMENTATION FOR COMPLETE INFORMATION.