# Product data sheet

Specifications



To be discontinued

## Transformer, Type T, industrial control, 2000VA, 1 phase, 480V primary, 277V secondary, 115C rise

9070T2000D22

Discontinued on: Nov 30, 2023

**Product availability: Stock - Normally stocked in distribution facility**

## Main

| | |
|---|---|
| **Product Type** | Industrial Control Transformer |
| **Type** | T |

## Complementary

| | |
|---|---|
| **Number Of Phases** | 1 phase |
| **Power Rating** | 2000 VA UL<br>2000 VA CSA<br>2000 VA NOM<br>1500 VA CE |
| **Primary To Secondary Voltage** | 480 V 277 V |
| **Temperature Rise** | 115 °C |

## Environment

| | |
|---|---|
| **Enclosure Type** | Not rated (open device) |

## Ordering and shipping details

| | |
|---|---|
| **Category** | 16206-9070 T (NOT TF) MTO |
| **Discount Schedule** | CP8 |
| **Gtin** | 3606486118276 |
| **Returnability** | No |

## Packing Units

| | |
|---|---|
| **Unit Type Of Package 1** | PCE |
| **Number Of Units In Package 1** | 1 |
| **Package 1 Height** | 11.00 in (27.94 cm) |
| **Package 1 Width** | 11.25 in (28.575 cm) |
| **Package 1 Length** | 14.19 in (36.043 cm) |
| **Package 1 Weight** | 46.60 lb(US) (21.137 kg) |

## Contractual warranty

| | |
|---|---|
| **Warranty** | 18 months |

Price is “List Price” and may be subject to a trade discount – check with your local distributor or retailer for actual price.

Disclaimer: This documentation is not intended as a substitute for and is not to be used for determining suitability or reliability of these products for specific user applications

## Sustainability

**Green Premium™ label** is Schneider Electric's commitment to delivering products with best-in-class environmental performance. Green Premium promises compliance with the latest regulations, transparency on environmental impacts, as well as circular and low-$CO_2$ products.

**Guide to assessing product sustainability** is a white paper that clarifies global eco-label standards and how to interpret environmental declarations.

Transparency RoHS/REACh

## Well-being performance

| | |
|---|---|
| Mercury Free | |
| Rohs Exemption Information | Yes |
| Pvc Free | |

## Certifications & Standards

| | |
|---|---|
| **Reach Regulation** | REACh Declaration |
| **Eu Rohs Directive** | Compliant<br>EU RoHS Declaration |
| **China Rohs Regulation** | China RoHS declaration<br>Product out of China RoHS scope. Substance declaration for your information. |
| **Environmental Disclosure** | Product Environmental Profile |
| **Circularity Profile** | No need of specific recycling operations |
| **California Proposition 65** | WARNING: This product can expose you to chemicals including: Phenyl glycidyl ether, which is known to the State of California to cause cancer and birth defects or other reproductive harm. For more information go to www.P65Warnings.ca.gov |

Dimensions Drawings
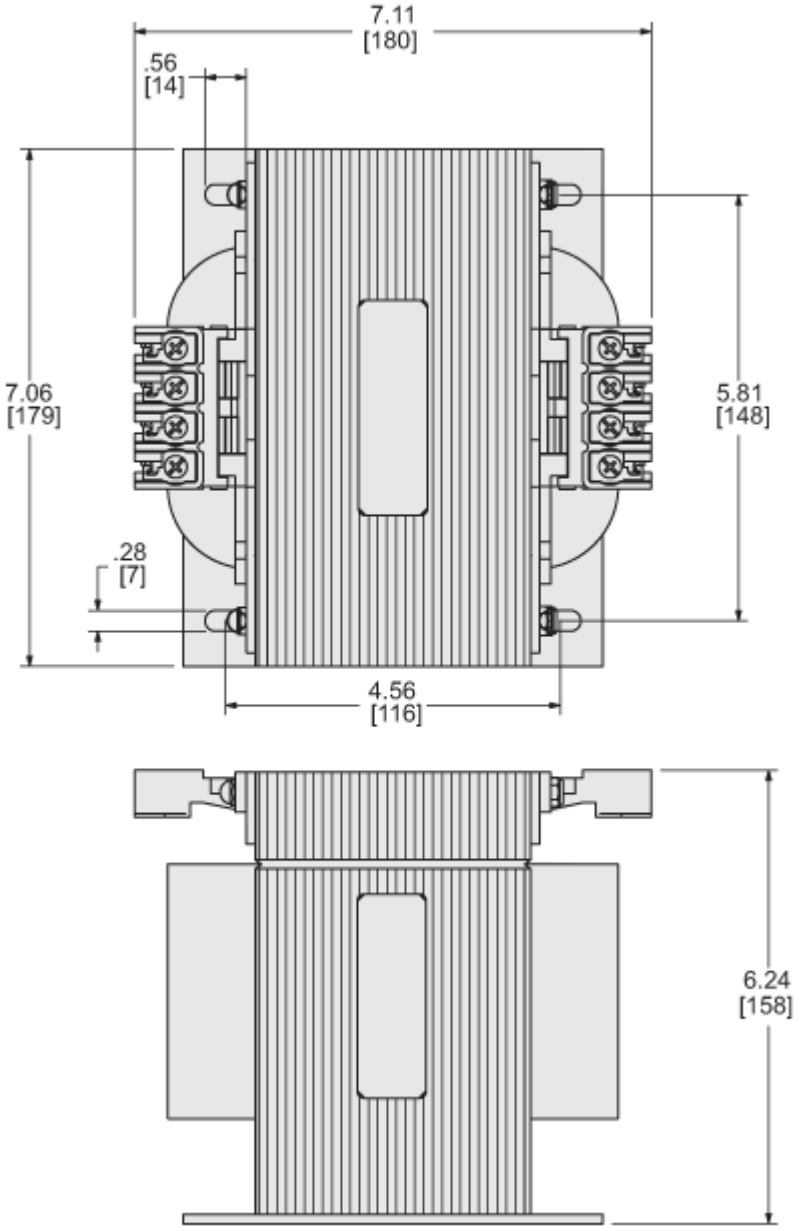
## Approximate Dimensions