Product data sheet

Specifications

Transformer, Type T, industrial control, 2000VA, 1 phase, 240x480V primary, 25/120V secondary, 115C rise

9070T2000D15

Product availability: Non-Stock - Not normally stocked in distribution facility

Main

Product Type	Industrial Control Transformer
Type	T

Complementary

Number of Phases	1 phase
Power Rating	2000 VA UL 2000 VA CSA 2000 VA NOM 1500 VA CE
Primary to Secondary Voltage	240 x 480 V 25/120 V 240 x 480 V 24/115 V 240 x 480 V 23/110 V
Temperature Rise	115 °C
Electrical Connection	Screw clamp terminals
Height	6.17 in (156.72 mm)
Width	7.06 in (179.32 mm)
Depth	7.17 in (182.12 mm)
Material	Copper: winding
Fingersafe Cover Compatibility	FSC2

Environment

Certifications	CSA file LR37055 guide 184-N-90 UL listed file E61239
Enclosure Type	Not rated (open device)
Insulation Temperature	356 °F (180 °C)

Ordering and shipping details

Category	US10CP816206
Discount Schedule	0CP8
GTIN	785901607687
Returnability	No
Country of origin	US

Packing Units

Price is “List Price” and may be subject to a trade discount – check with your local distributor or retailer for actual price.

Disclaimer: This documentation is not intended as a substitute for and is not to be used for determining suitability or reliability of these products for specific user applications

Unit Type of Package 1	PCE
Nbr. of units in pkg.	1
Package 1 Height	11.00 in (27.94 cm)
Package 1 Width	11.250 in (28.575 cm)
Package 1 Length	14.190 in (36.043 cm)
Package weight(Lbs)	49.300 lb(US) (22.362 kg)

Contractual warranty

Warranty (in months)	18

Environmental Data

Schneider Electric aims to achieve Net Zero status by 2050 through supply chain partnerships, lower impact materials, and circularity via our ongoing “Use Better, Use Longer, Use Again” campaign to extend product lifetimes and recyclability.

Environmental Data explained

How we assess product sustainability

Use Better

Materials and Substances

Packaging made with recycled cardboard	**Yes**
Packaging without single use plastic	**No**
SCIP Number	**Cc71a744-5621-4411-9c01-0b5589085e26**
EU RoHS Directive	**Compliant By Exemption**
REACh Regulation	**Reference contains Substances of Very High Concern above the threshold**
California proposition 65	**WARNING: This product can expose you to chemicals including: Phenyl Glycidyl Ether, which is known to the State of California to cause cancer and birth defects or other reproductive harm. For more information go to www.P65Warnings.ca.gov**
PVC free	**Yes**

Use Longer

Lifetime extension

Repair	**No**

Use Again

Repack and remanufacture

Take-back	**No**

Technical Illustration

Dimensions

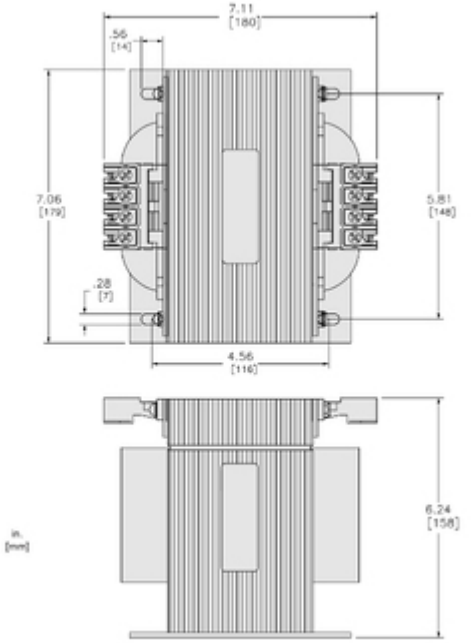

Technical Illustration

Wiring diagram

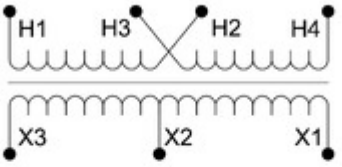

Options

Voltage Code	Voltages		Connections	
	Primary	Secondary	Primary	Secondary
D15	240 x 480	23/110 24/ /120	240: Connect to H1 and H4 Jumper H1 with H3 Jumper H2 with H4 480: Connect to H1 and H4 Jumper H2 with H3	23 or 24 or 25: Connect to X1 and X2 110 or 115 or 120: Connect to X1 and X3

REFER TO TECHNICAL DOCUMENTATION FOR COMPLETE INFORMATION.