Product data sheet

Specifications

To be discontinued

Transformer, Type T, industrial control, 1500VA, 1 phase, 208/277V primary, 120V secondary, 115C rise

9070T1500D51

Discontinued on: Nov 30, 2023

Product availability: Stock - Normally stocked in distribution facility

Main

Product Type	Industrial Control Transformer
Type	T

Complementary

Number Of Phases	1 phase
Power Rating	1500 VA UL 1500 VA CSA 1500 VA NOM 1000 VA CE
Primary To Secondary Voltage	208/277 V 120 V
Temperature Rise	115 °C

Environment

Enclosure Type	Not rated (open device)

Ordering and shipping details

Category	16201-9070 T (NOT TF) 250-2000VA
Discount Schedule	CP8
Gtin	3606486986714
Returnability	No

Packing Units

Unit Type Of Package 1	PCE
Number Of Units In Package 1	1
Package 1 Weight	38.00 lb(US) (17.237 kg)

Contractual warranty

Warranty	18 months

Price is “List Price” and may be subject to a trade discount – check with your local distributor or retailer for actual price.

Disclaimer: This documentation is not intended as a substitute for and is not to be used for determining suitability or reliability of these products for specific user applications

Sustainability

Green Premium™ label is Schneider Electric's commitment to delivering products with best-in-class environmental performance. Green Premium promises compliance with the latest regulations, transparency on environmental impacts, as well as circular and low-CO_2 products.

Guide to assessing product sustainability is a white paper that clarifies global eco-label standards and how to interpret environmental declarations.

Transparency RoHS/REACh

Well-being performance

Mercury Free	
Rohs Exemption Information	Yes
Pvc Free	

Certifications & Standards

Reach Regulation	REACh Declaration
Eu Rohs Directive	Compliant EU RoHS Declaration
China Rohs Regulation	China RoHS declaration Product out of China RoHS scope. Substance declaration for your information.
Environmental Disclosure	Product Environmental Profile
Circularity Profile	No need of specific recycling operations
California Proposition 65	WARNING: This product can expose you to chemicals including: Phenyl glycidyl ether, which is known to the State of California to cause cancer and birth defects or other reproductive harm. For more information go to www.P65Warnings.ca.gov

Dimensions Drawings
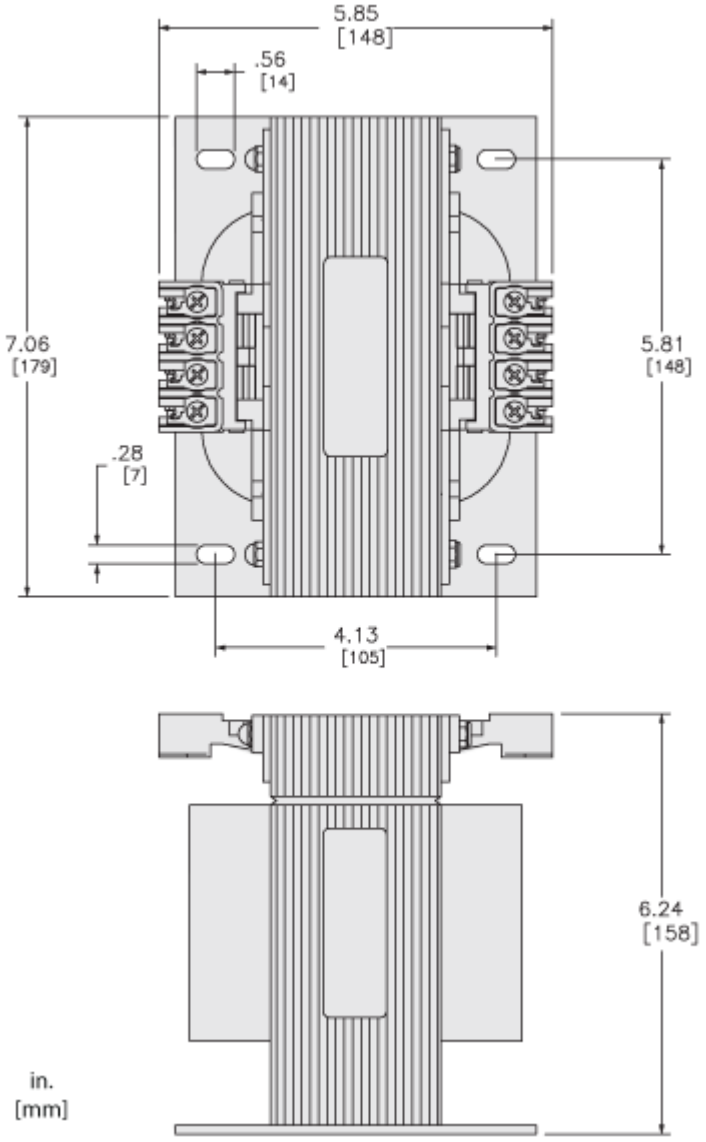
Approximate Dimensions