Product data sheet

Specifications

Contactor, Definite Purpose, 30A, 2 pole, 440/480VAC 50/60Hz coil, open

8910DP32V06

Product availability: Stock - Normally stocked in distribution facility

Main

Product or Component Type	Definite Purpose Contactor
Line Rated Current	30 A
Number of Poles	2P
Pole contact composition	2 NO
Range of Product	DP

Complementary

Maximum Horse Power Rating	2 hp 115 V AC, 1 phase 5 hp 230 V AC, 1 phase
Locked rotor rated current	125 A 460 V AC 100 A 575 V AC 150 A 277 V AC
[Ue] rated operational voltage	600 V AC
[Uc] control circuit voltage	440 V AC 50 Hz 480 V AC 60 Hz
Phase	1 phase
Electrical Connection	Binder head Quick connect terminals
Height	2.008 in (51 mm)
Width	3.3 in (84 mm)
Depth	2.4 in (62 mm)

Environment

Product Certifications	UL Recognized CSA

Ordering and shipping details

Category	US1CP1B21356
Discount Schedule	CP1B
GTIN	785901744399
Returnability	Yes
Country of origin	MX

Packing Units

Unit Type of Package 1	PCE

Price is “List Price” and may be subject to a trade discount – check with your local distributor or retailer for actual price.

Disclaimer: This documentation is not intended as a substitute for and is not to be used for determining suitability or reliability of these products for specific user applications

Nbr. of units in pkg.	1
Package 1 Height	3.00 in (7.62 cm)
Package 1 Width	3.50 in (8.89 cm)
Package 1 Length	2.300 in (5.842 cm)
Package weight(Lbs)	8.160 oz (231.332 g)

Contractual warranty

Warranty (in months)	18

Environmental Data

Schneider Electric aims to achieve Net Zero status by 2050 through supply chain partnerships, lower impact materials, and circularity via our ongoing “Use Better, Use Longer, Use Again” campaign to extend product lifetimes and recyclability.

Environmental Data explained

How we assess product sustainability

Use Better

Materials and Substances

Packaging made with recycled cardboard	**Yes**
Packaging without single use plastic	**Yes**
SCIP Number	**9635bca0-88f5-4211-aaa3-d012e1850a41**
EU RoHS Directive	**Compliant By Exemption**
REACh Regulation	**Reference contains Substances of Very High Concern above the threshold**

Use Longer

Lifetime extension

Repair	**No**

Use Again

Repack and remanufacture

Take-back	**No**

Technical Illustration

Dimensions

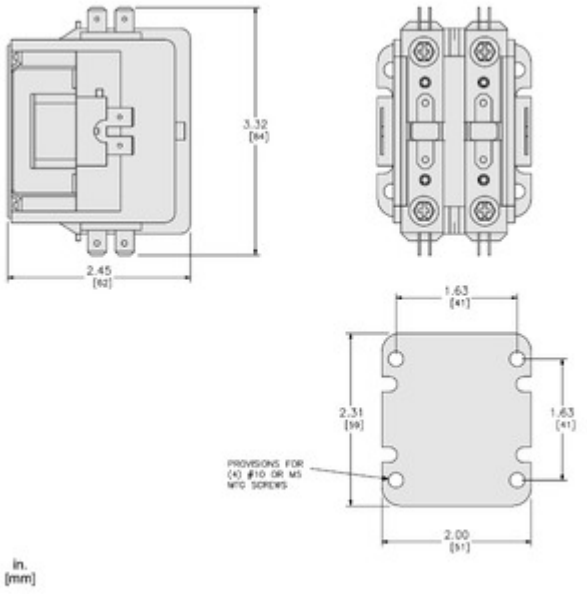

Technical Illustration
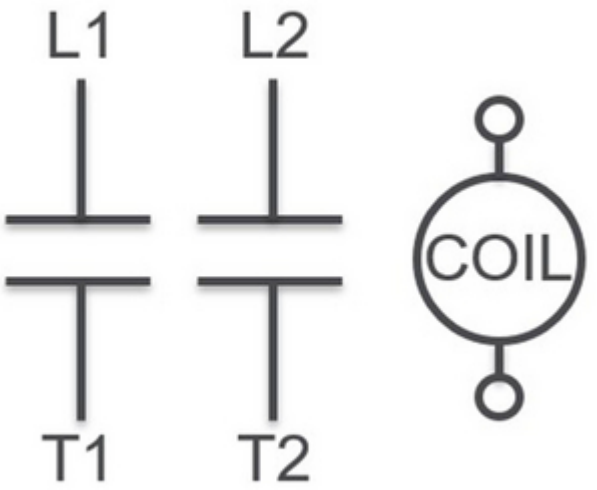
Wiring diagram