Product data sheet

Specifications

Contactor, Type L, multipole lighting, electrically held, 30A, 6 pole, 600V, 110/120VAC 50/60Hz coil, NEMA 1 [TAA]

8903LG06V02

Product availability: Non-Stock - Not normally stocked in distribution facility

Main

Product or Component Type	Electrically Held Lighting Contactor
Range of Product	8903L
Control Circuit	Separate control circuit

Complementary

Control Circuit Voltage	110 V AC 50 Hz 120 V AC 60 Hz
Inrush power in VA	150 VA 60 Hz 140 VA 50 Hz
Hold-in power consumption in VA	30 VA 60 Hz 30 VA 50 Hz
Current Rating	20 A tungsten 30 A fluorescent
Number of Poles	6P 6 NC
Control Unit	No control units
Pilot Light	No indicator
Electrical Connection	Screw-clamp terminals
Height	12.7 in (322 mm)
Depth	6.02 in (153 mm)
Width	7.8 in (198 mm)

Environment

Enclosure Type	NEMA 1 painted sheet steel surface
Product Certifications	UL Listed CSA

Ordering and shipping details

Category	US10CP121321
Discount Schedule	0CP1
GTIN	785901113416
Returnability	No
Country of origin	MX

Packing Units

Price is “List Price” and may be subject to a trade discount – check with your local distributor or retailer for actual price.

Disclaimer: This documentation is not intended as a substitute for and is not to be used for determining suitability or reliability of these products for specific user applications

Unit Type of Package 1	PCE
Nbr. of units in pkg.	1
Package 1 Height	7.50 in (19.05 cm)
Package 1 Width	8.00 in (20.32 cm)
Package 1 Length	13.50 in (34.29 cm)
Package weight(Lbs)	12.516 lb(US) (5.677 kg)

Compliance

Compliance	TAA Compliant

Contractual warranty

Warranty (in months)	18

Environmental Data

Schneider Electric aims to achieve Net Zero status by 2050 through supply chain partnerships, lower impact materials, and circularity via our ongoing “Use Better, Use Longer, Use Again” campaign to extend product lifetimes and recyclability.

Environmental Data explained

How we assess product sustainability

Environmental footprint

Total lifecycle Carbon footprint	**559 kg CO2 eq.**
Carbon footprint of the manufacturing phase [A1 to A3]	**43 kg CO2 eq.**
Carbon footprint of the distribution phase [A4]	**5 kg CO2 eq.**
Carbon footprint of the installation phase [A5]	**0.8 kg CO2 eq.**
Carbon footprint of the use phase [B2, B3, B4, B6]	**502 kg CO2 eq.**
Carbon footprint of the end-of-life phase [C1 to C4]	**8 kg CO2 eq.**
Environmental Disclosure	**Product Environmental Profile**

Use Better

Materials and Substances

Packaging made with recycled cardboard	**Yes**
Packaging without single use plastic	**Yes**
EU RoHS Directive	**Compliant**
REACh Regulation	**Free of Substances of Very High Concern above the threshold**
Halogen content performance	**Halogen free plastic parts product**
PVC free	**Yes**

Use Longer

Lifetime extension

Repair	**No**

Use Again

Repack and remanufacture

Recyclability potential, in %	**90**
Circularity Profile	**No need of specific recycling operations**
Take-back	**No**

Dimensions Drawings
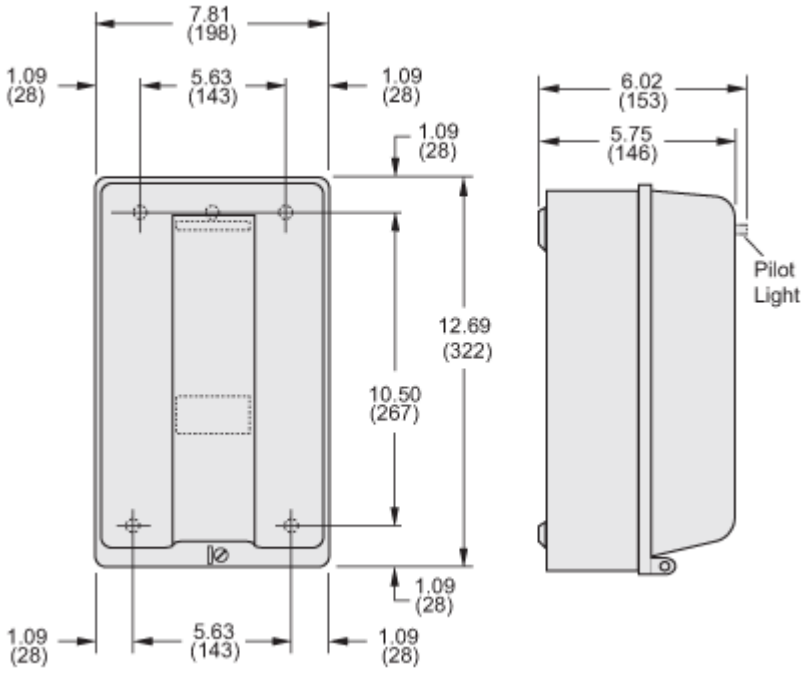
Approximate Dimensions