LIGHTOLIER by signify

# Downlighting

## LyteProfile 4"

### P4R Round Downlight & Wall Wash

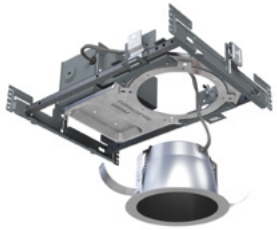

**LyteProfile downlights and wall washers** provide a perfect balance of functionality with glare control. The robust and versatile UniFrame frame-in kit makes changes and updates easy to manage and install. High optical efficiency reinforced with Accurender technology provides an optimum balance of performance and quality of light. Ideal for use in a variety of applications including open office, institutional, healthcare, and retail.

Project:
Location:
Cat.No:
Type:
Qty:
Notes:

Standard luminaire = Frame + Engine/Trim + Accessories (optional)

Buy American Act of 1933 (BAA)** Compliant luminaire* = Frame-BAC + Engine/Trim-BAC

* BAA compliance requires that BAC option be selected for each of frame and engine/trim. Frame and engine/trim will be ordered/shipped together (ex: 4RN-BAC-P4RDL20935WCDZ10U-BAC). Accessories (optional) are not currently BAA-compliant.

## Frame

Standard example: 4RN | BAC example: 4RN-BAC

| Series | Aperture | Installation | Options | |
|---|---|---|---|---|
| 4 | R | | | |
| **4** Uniframe 4" Non-IC | **R** Round | **N** New construction (Non-IC) | **–** Universal 120/277/347V<br>**EM6** Emergency, 6W Self-Test/Self-Diagnostic (not available for BAC)[1] | **LC** Chicago Plenum[2]<br>**BAC** Meets the requirements of the Buy American Act of 1933 (BAA)** |
| | | **R** Remodeler (Non-IC) | **–** Universal 120/277/347V | |
| | | **A** AirSeal (IC) | **–** Universal 120/277/347V | |

## Engine / Trim

Standard example: P4RDL20935WCDZ10U | BAC example: P4RDL20935WCDZ10U-BAC

| Series | Style | Lumen | CRI/CCT | Beam | Reflector | Flange |
|---|---|---|---|---|---|---|
| P4R | | | | | | |
| **P4R** LyteProfile 4" round downlight | **DL** Downlight<br>**LW** Lensed Wall Wash[3]<br>**SL** Shower light[4] (non-conductive lens) | **05** 500lm<br>**10** 1000lm<br>**15** 1500lm<br>**20** 2000lm[5]<br>**25** 2500lm[5]<br>**30** 3000lm[5]<br>**35** 3500lm[5]<br>**40** 4000lm[5] | **927** 90CRI/2700K<br>**930** 90CRI/3000K<br>**935** 90CRI/3500K<br>**940** 90CRI/4000K<br>**9D2W** 3000-1800K (dim to warm)[6]<br>**96T** 2700-6500K (tunable white)[7] | **N** Narrow<br>**M** Medium<br>**W** Wide[3] | **CL** Specular clear<br>**CC** Comfort clear<br>**CD** Comfort clear diffuse | **–** White (matte)<br>**B** Black (matte)[8]<br>**P** Polished (matches aperture)<br>**F** Flangeless (requires CA4RFT)[8] |
| | | | | | **WH** White (matte)<br>**BK** Black (matte) | **–** White (matte)<br>**B** Black (matte)<br>**F** Flangeless (requires CA4RFT)[8] |
| | | | | | **WHAMF** White (gloss antimicrobial)[8] | **–** White (gloss)<br>**F** Flangeless (requires CA6RFT)[8] |

| Dimming / Options | Voltage | Options |
|---|---|---|
| | | |
| **Z10** 0-10V 1%<br>**Z10D20** 0-10V 1% (dim to Off) (up to 3500lm) | **U** 120/277V<br>**3** 347V (Z10 only) (up to 3000lm) | **–** None<br>**R** Retrofit[10] (not compatible with IEM6) |
| **L1** Lutron LDE1 EcoSystem 1% (500lm not available) | **U** 120/277V | **IEM6** Trim mounted EM test switch (for DL style only) |
| **RA** Integral Interact Pro RF sensor (up to 2500lm)[9] | | **BAC** Meets the requirements of the Buy American Act of 1933 (BAA)** |
| **E** Forward & Revserse Phase (up to 2500lm) | **1** 120V | |

## Accessories (Not currently BAA-compliant - learn more on page 2)

| | |
|---|---|
| **SBA** | Interact Ready System Bridge Accessory with integral occupancy and daylight sensor (compatible with all 0-10V options, see SBA spec sheet)[11] |
| **CAEM6** | Field installable Bodine BSL6 6W battery pack with self-test/self-diagnostic for use with new construction frames, 120-277V |
| **CA4RFT** | Mud-in ring for use in 4" round flangeless trim installations (ordered with a flangeless (F) light engine) |
| **CAEM6TSCP** | Remote switch cover plate. Order with EM6 frame for remote mounted test switch (Required for LW and SL styles). |
| **C4RVPWH** | IP65 rated vandal proof matte white accessory mounts onto flangeless light engines (F) and non-IC (N) frame only |
| **T347-75VA** | 347:120V step-down transformer for non-IC (N) frame only (see page 2 for details) |
| **7920** | 4" sloped ceiling adapter (refer to SCA spec sheet for slope options) |

1. Emergency (EM6) frame is compatible with reflector mounted test switch when light engine is ordered with IEM6 (not compatible w/347V).
2. Chicago Plenum (LC) is not available for Buy American Compliant (BAC) configs.
3. Lensed wall wash (LW) style only available with Wide (W) beam (2500lm max).
4. Shower light (SL) in only available with White (WH) reflector finish and Wide (W) beam.
5. Not available with AirSeal (A) frame.
6. Specify 9D2W with Z10U dimming only (up to 2000lm max). Not compatible with Z10D20 or 347V (3) options. Not available with wide (W) beam.
7. Specify 96T with Z10U or RAU dimming only (up to 2000lm max). Not compatible with Z10D20 or 347V (3) options. Not available with wide (W) beam.
8. Consult factory with ETO request for antimicrobial reflector finish (WHAMF) and black (B) flange for all styles, and flangeless (F) for LW style.
9. Linear driver profile. See dimensional data following. Specify only with non-IC (N) frame, not for use with LC or EM6 options.
10. Retrofits select legacy Lightolier luminaires (see pages 2 for details). Z10 dimming only. Consult factory for other dimming options.
11. Requires IRT9015 IR remote and Interact Pro App for commissioning (requires above ceiling access).

** Failure to properly select the "BAC" suffix could result in you receiving product that is not BAA compliant product with no recourse for an RMA or refund. This BAC designation hereunder does not address (i) the applicability of, or availability of a waiver under, the Trade Agreements Act, or (ii) the "Buy America" domestic content requirements imposed on states, localities, and other non-federal entities as a condition of receiving funds administered by the Department of Transportation or other federal agencies.

c UL us LISTED | IC INSULATION CONTACT | WET LOCATION | RoHS COMPLIANT | ENERGY STAR | interact ready.

# P4R LyteProfile 4"

## Round Downlight & Lensed Wall Wash

## Features

**Optics**

- Provides a 60° cutoff (physical and reflected)
- Available in wide (80°), medium (65°), and narrow (55°) beam options.
- Spun and anodized reflectors available in specular (clear), semi-specular (comfort clear and diffuse finishes. Also available in white and black painted finishes.
- Consult factory for RAL finishes.

**Quality of light**

- Color consistency: 2 SDCM
- 90 CRI minimum (Accurender)

## Construction (New Construction)

- Galvanized stamped steal for dry / plaster ceilings.
- Pre-installed telescoping mounting bars (13"-24")
- Frame accommodates C- channel, black iron, and 3/4" EMT for mounting distances greater than 24" between joists.
- Manufactured from 20 gage galvanized steel construction with rolled edge aperture to guide cutting tools for perfect hole cutting.

**Max ceiling thickness is 1.5" (38 mm).**

### Patented install Mounting frame

- Pre-installed mounting bars allow for fast and tool-less install into T-grid & hat channel ceilings
- Close-cut aperture design eliminates an undesired gap between ceiling material and reflector.
- Simple plug-and-play connection between frame and light engine from below the ceiling allows for:
  - Easy upgrades
  - Technology changes
  - Repairs and troubleshooting

## Retrofit

- Easily updates legacy LyteProfile LED downlights to the latest technology. Includes light engine, trim, and driver mounted on cover plate that mounts to previous generations of LyteProfile LED luminaires. Order with R option code at end of light engine/trim catalog number.

## Dimming

- Advance 0-10v 1% (Z10) logarithmic curve is standard. Specify D2O for factory-set dim-to-off function (consult factory for linear dimming curve).
- Lutron LDE1 (L1) EcoSystem 1%
- Electronic low voltage (E) offers forward or reverse phase dimming
- **Dim to Warm (D2W):** changes CCT from 3000-1800K gradually as it dims. Use with Z10U dimming only. Fixture-to-fixture consistency of ≤3SDCM at 2700K & 3000K, & ≤5SDCM at 1800K
- **Tunable white (6T):** 2700K to 6500K CCT. Use with Z10U or RAU dimming only. Fixture-to-fixture consistency of ≤3SDCM at 2700K, 5000K, & 6500K CCT.

## Light engine

Quick connect power pack allow for easy installation and replacement from below ceiling with no need for additional wiring. This allows for:

- Frame and ceiling installation to be performed while still finalizing details such as lumen packages, CCT and control type.
- Easy replacement of electronics at end of life with minimal wasted material and labor required.
- Ease and upgradability of technology.
- Lumen Maintenance: L80 at 60,000 hours.
- 347V light engines are Z10 dimming only and include dedicated 347V driver. For 347V non-Z10 dimming, order T347-75VA field-installed step-down transformer accessory.

## Emergency

Bodine BSL6 6W battery pack with self-test/ diagnostic functionality. Factory or field mounted to frame.

- For trim with integral emergency test switch, order light engine with IEM6 option (ex: P4RDL20935WCDZ10UIEM6). DL style only.
- For remote ceiling mounted test switch, order standard light engine (ex: P4RDL20935WCDZ10U). Optional accessory ceiling mounting plate available (CAEM6TSCP) for remote mounted test switch.
- Refer to Calculite-LyteProfile-EasyLyte Emergency Battery Pack specification sheet for more details.
- Tunable white (96T) with EM6 frame option wired for emergency lighting on 6500K CCT circuit.
- CEC Title 24 JA8 Certified.

## Options and Accessories

**Sloped ceilings:** Compatible with sloped ceiling adapters (see SCA spec sheet).

**Flangeless mud-in ring:** Use CA4RFT
For use with flangless plaster installations.

**Field Installed Emergency:** Refer to Calculite-LyteProfile-EasyLyte Emergency Battery Pack specification sheet for more details.

- **CAEM6:** Field install EM6 kit with Bodine BSL6 6W battery pack with self-test/self-diagnostic, mounts to new construction frames. Includes remote ceiling plate for test switch. To mount test switch to trim for new construction frame, order downlight light engine with IEM6 option code (e.g. P4RDL20935WCDZ10UIEM6).

**C4RVPWH:** Includes machined aluminum ring painted white, gasketed for IP65 protection, and impact resistant polycarbonate lens (IK10). Locks in place with discrete setscrew (key included). Available also with antimicrobial finish (C4RVPWHAMF).

**CAEM6TSCP:** Ceiling cover plate for remote mounted EM6 test switch. 1/2" (25mm) hole, 4 3/8" (109mm) x 2 3/4" (69mm) rectangular. Includes two mounting screws. Required for lensed wall wash (LW) and shower light (SL) styles.

**T347-75VA:** Field installable 347:120V 75VA step-down transformer, attaches to knock out on frame junction box, for use with non-IC (N) or remodel (R) frames.

## ENERGY STAR® exceptions

- 500lm configurations
- Black finishes

## Labels and Listings

- cULus listed for wet locations
- CCEA (frames with *LC suffix)
- ENERGY STAR® certified
- RoHS certified

## Warranty

5 year limited warranty

Visit Signify.com/warranties for more information on Signify's standard 5-year limited warranty on complete luminaire systems.

# P4R LyteProfile 4"

## Round Downlight & Lensed Wall Wash

interact

| | | Standalone | Gateway | Gateway + IoT |
|---|---|---|---|---|
| Dimming, grouping, and zoning | | ✓ | ✓ | ✓ |
| Bluetooth and ZigBee enabled | | ✓ | ✓ | ✓ |
| Motion sensing and daylight harvesting | | ✓ | ✓ | ✓ |
| Integration with 0-10V and phase dimming fixtures | | ✓ | ✓ | ✓ |
| Code compliance | | ✓ | ✓ | ✓ |
| Granular dimming and dwell time | | ✓ | ✓ | ✓ |
| Correlated color temperature (CCT) tuning by switch | New | ✓ | ✓ | ✓ |
| Support for sensor-based Tunable White luminaires | New | ✓ | ✓ | ✓ |
| Energy reporting and monitoring | | | ✓ | ✓ |
| Scheduling | | | ✓ | ✓ |
| Demand response | | | ✓ | ✓ |
| BMS integration (BACnet) | | | | ✓ |
| Floor plan visualization | | | | ✓ |
| IoT sensors for wellness | | | | ✓ |
| IoT Apps for productivity | | | | ✓ |

### Currently supported maximum system size

To be able to design the lighting system correctly for the customer, it is important to know the prime characteristics of the system, its possibilities and limitations.

| System level | |
|---|---|
| Total number of gateways | Unlimited |
| Total number of devices | 200 per network |
| • Luminaires with integrated sensors | 150 |
| • Smart TLEDS | 150 |
| • Zones + groups | 64 |
| Total number of ZGP devices (sensors and switches) | 50 |
| • Sensors | 30 |
| • Switches | 50 |

| Group level | |
|---|---|
| Recommended number of lights | 40 (maximum 150) |
| Number of ZGP devices | 5 |
| Number of scenes | 16 |

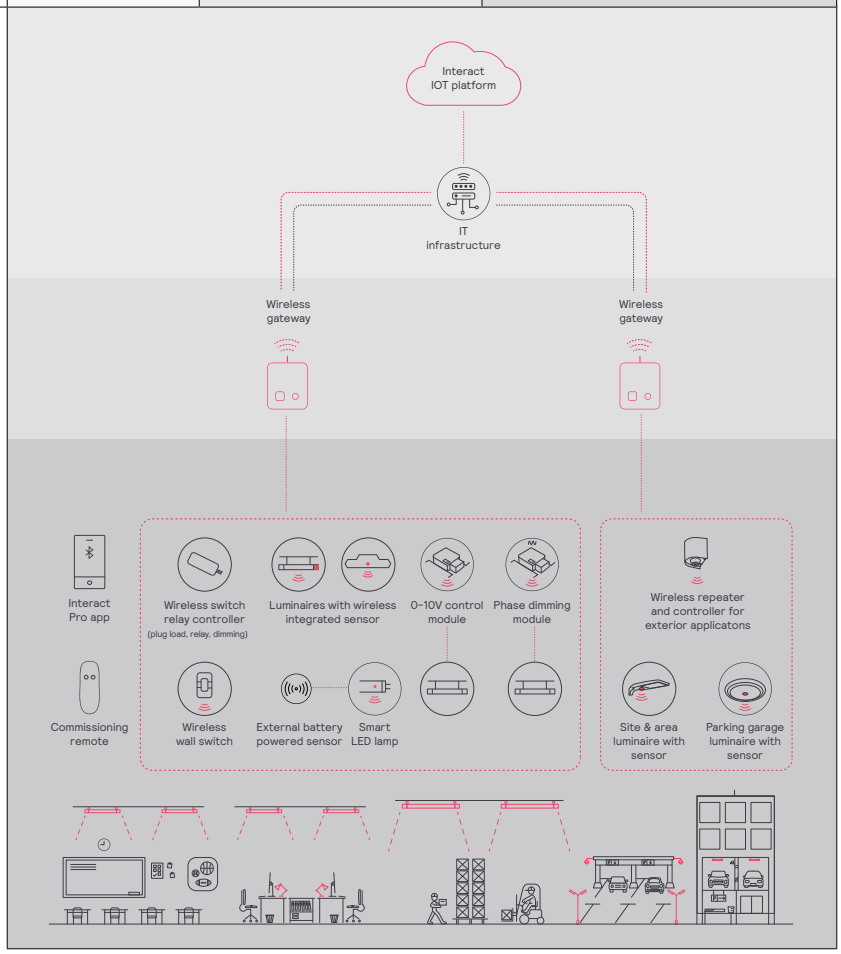

# P4R LyteProfile 4"

## Round Downlight & Lensed Wall Wash

## Wireless controls options

### Interact

- SWZCS is a connected sensor with integral occupancy and daylight sensing and supports wireless mesh connectivity.
- The sensor works in the standalone mode (similar to SpaceWise) when configured without a gateway or in a cloud connected mode if a compatible gateway is used.
- Interact includes an App, a portal and a broad portfolio of wireless luminaires, lamps and retrofit kits all working on the same system.
- Startup is implemented via Interact Pro App (Android or iPhone) & BlueTooth connectivity. The App provides flexibility to choose between a gateway or non gateway mode for setup.
- Setup with the gateway requires wired internet access to the gateway. It is possible to add a gateway at a later point.
- Prepare project configuration steps remotely and use IRT9015 remote on-site to identify and group devices together.

  **Compatible with:**

  - SWS200 & UID8465 wireless scene switch
  - Battery powered IP42 presence sensor OCC sensor IA CM WH 10/1
  - Battery powered IP42 presence & daylight sensor OCC-DL sensor IA CM IP42 WH
  - LCN3110: battery powered IP65 presence sensor, OCC sensor IA CM IP65W
  - LCN3120: battery powered IP65 presence & daylight sensor, OCC-DL sensor IA CM IP65 WH
- For more information on Interact visit: interact-lighting.com/interactproscalablesystem

### Radio only sensor (RA or RADIO)

- Integral RA or RADIO only sensor simply enables wireless mesh connectivity to the luminaire without any occupancy or daylight sensing.
- Ideal for applications where sensing functionality is managed by other Interact devices and the luminaire only needs to have wireless connectivity.
- Interact includes an App, a portal and a broad portfolio of wireless luminaires, lamps and retrofit kits all working on the same system.
- Startup is implemented via Interact Pro App (Android or iPhone) & Bluetooth connectivity. The App provides flexibility to choose between a gateway or non-gateway mode for setup.
- Setup with the gateway requires wired internet access to the gateway. It is possible to add a gateway at a later point.
- Prepare project configuration steps remotely, identify and group devices together onsite.
- Compatible with SWS200 and UID8465 wireless scene switch, wireless Occ sensor (OCC SENSOR IA CM IP42 WH 10/1) and wireless Day/Occ sensor (OCC MULTI SENSOR IA CM WH 10/1).
- For more information on Interact visit: interact-lighting.com/interactproscalablesystem

### Sensor bundle (IAOSB or SB)

- A wireless IoT connected lighting solution for large enterprises that span across multiple floors, buildings and require multiple gateways.
- View all your projects under one dashboard and easily compare insights from multiple projects in one view.
- Compatible with SWS200 wireless scene switch, wireless Occ sensor (OCC SENSORIA CM IP42 WH 10/1) and wireless Day/Occ sensor (OCC MULTI SENSOR IA CM WH 10/1) and wireless Occupancy or Daylight & Occupancy sensors available.• Use Interact software and insights to increase building efficiency, achieve building wide integration and optimize space through occupancy analytics.
- IAOSB or SB option in addition to occupancy and daylights sensing supports advanced IoT capabilities, such as people estimation analysis, desk level temperature & humidity sensing, noise classification, and BLE beacon.
- Requires compatible Gateway and internet connectivity for commissioning.
- For more information, visit: interact-lighting.com/interactproscalablesystem

### Emergency Options (ER100)

- **Power Sensing** (factory default) – Recommended UL924 option requires unswitched power sense line, absence of voltage on the normal circuit triggers luminaire to 100% output.
- **Power Interruption Detection** (field option) – Detects AC power interruption >30ms triggers 90 minute emergency mode with luminaire at 100% output.

## Interact supported sensor option codes across Genlyte product lines

| | Evokit | Day-Brite | Ledalite | Lightolier |
|---|---|---|---|---|
| ZigBee + Bluetooth + Sensing | SWZCS | SWZCS | CS | SBA accessory (external) |
| ZigBee + Bluetooth | RADIO | RADIO | RA | RA |
| ZigBee + Bluetooth + Sensing + Environmental data | IAOSB | IAOSB | SB | SB |
| ZigBee + Highbay + Sensing | - | SWZCSH | - | - |

# P4R LyteProfile 4"

## Round Downlight & Lensed Wall Wash

## AccuRender Technology (CRI 90+)

The right light brings colors to life. Our new AccuRender technology helps ensure colors are rendered more accurately and consistently, while doing so as efficiently as CRI 80 products.

**Standard CRI 80**

Good color rendering and high efficacy

**Standard CRI 90**

Better color rendering and low efficacy

**AccuRender**

Best color rendering, color preference and high efficacy

### Enjoy design flexibility

**Full range of products and options:**

- Available soon in across Lightolier portfolio for application flexibility
- Multiple color temperatures (CCTs) and lumen packages offered

### Promote savings

**High efficacy, with no penalty:**

- Energy efficacy compares well to conventional 80 CRI
- Up to 25% more energy savings vs competitor 90 CRI[1]
- Helps meet Title 24 requirements

### Show your true colors

**High color rendering:**

- True to life colors to help energize your environment and render better flesh tones critical for healthcare hospitality and retail applications.
- $R_a$ up to 94 CRI
  $R_9$ up to 67 CRI
  $G_a$ up to 99 CRI
  $C_9$ up to 94 CRI
- $R_f$ up to 92 TM-30
  $R_{f,h1}$ up to 91 TM-30
  $R_9$ up to 100 TM-30
  $R_{cs,h1}$ up to -5% TM-30

### Achieve color balance

**Best in class color consistency:**

- Promote aesthetic harmony in your space with ≤ 2 SDCM

### Electrical (Input frequency of 50/60Hz)

| Product | Input Volts | Input Current (A) | Drive Current (A) | Input Power (W) | LED Power | THD Factor @ Max Load | Power Factor @ Max Load |
|---|---|---|---|---|---|---|---|
| P4RDL05_Z10U/3 | 120V | 0.041A | 0.12A | 4.9W | 3.9W | <10% | >0.9 |
| | 277V | 0.019A | 0.12A | 5.1W | 3.9W | <30% | >0.9 |
| | 347V | 0.017A | 0.12A | 5.8W | 3.9W | <30% | >0.9 |
| P4RDL10_Z10U/3 | 120V | 0.070A | 0.20A | 8.3W | 6.8W | <10% | >0.9 |
| | 277V | 0.031A | 0.20A | 8.6W | 6.8W | <20% | >0.9 |
| | 347V | 0.028A | 0.20A | 9.7W | 6.8W | <30% | >0.9 |
| P4RDL15_Z10U/3 | 120V | 0.102A | 0.30A | 12.2W | 10.2W | <10% | >0.9 |
| | 277V | 0.044A | 0.30A | 12.3W | 10.2W | <10% | >0.9 |
| | 347V | 0.040A | 0.30A | 14.0W | 10.2W | <25% | >0.9 |
| P4RDL20_Z10U/3 | 120V | 0.134A | 0.40A | 16.1W | 13.6W | <10% | >0.9 |
| | 277V | 0.058A | 0.40A | 16.2W | 13.6W | <10% | >0.9 |
| | 347V | 0.052A | 0.40A | 17.9W | 13.6W | <20% | >0.9 |
| P4RDL25_Z10U/3 | 120V | 0.175A | 0.53A | 21.0W | 17.9W | <10% | >0.9 |
| | 277V | 0.076A | 0.53A | 21.1W | 17.9W | <10% | >0.9 |
| | 347V | 0.064A | 0.53A | 22.3W | 17.9W | <20% | >0.9 |
| P4RDL30_Z10U/3 | 120V | 0.208A | 0.63A | 25.0W | 21.3W | <10% | >0.9 |
| | 277V | 0.091A | 0.63A | 25.1W | 21.3W | <10% | >0.9 |
| | 347V | 0.077A | 0.63A | 26.6W | 21.3W | <20% | >0.9 |
| P4RDL35_Z10U/3 | 120V | 0.247A | 0.75A | 29.7W | 25.5W | <10% | >0.9 |
| | 277V | 0.107A | 0.75A | 29.7W | 25.5W | <10% | >0.9 |
| | 347V | 0.087A | 0.75A | 30.4W | 25.5W | <20% | >0.9 |
| P4RDL40_Z10U/3 | 120V | 0.288A | 0.88A | 34.6W | 29.8W | <10% | >0.9 |
| | 277V | 0.125A | 0.88A | 34.6W | 29.8W | <10% | >0.9 |
| | 347V | 0.102A | 0.88A | 35.4W | 29.8W | <20% | >0.9 |

### Tunable white binning chart

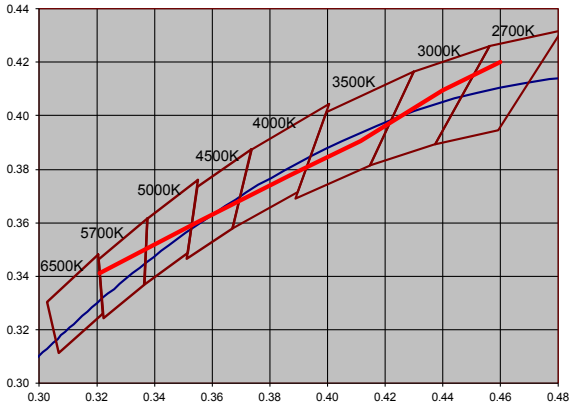


### Dim-to-Warm: CCT vs Dimmed level

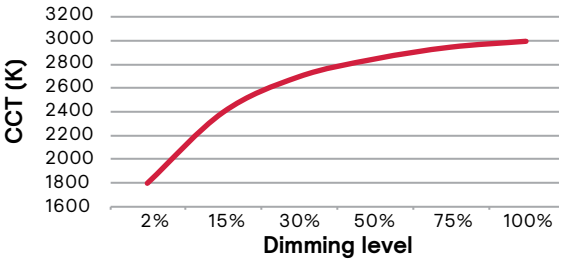

# P4R LyteProfile 4"

## Round Downlight & Lensed Wall Wash

### New construction

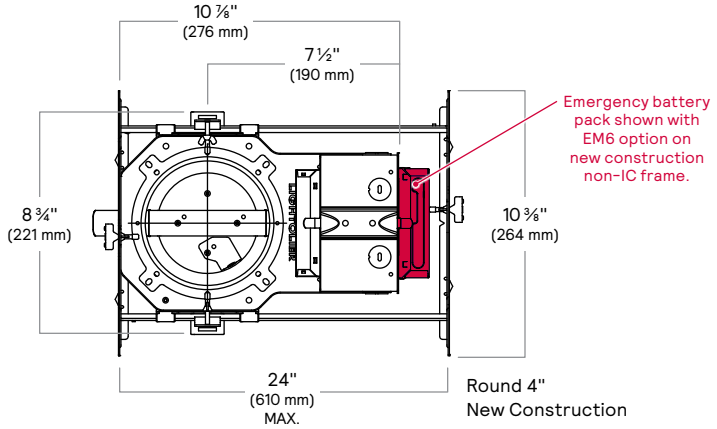


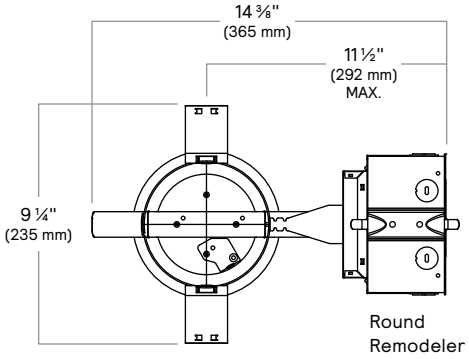


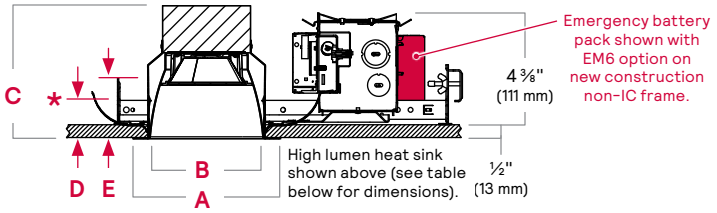


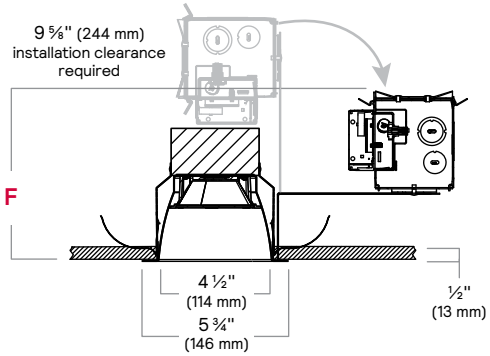


| | Downlight/Showerlight | | Lensed Wall Wash |
|---|---|---|---|
| | 500-2500lm | 3000-4000lm | |
| A | 5 ¾" (146mm) | 5 ¾" (146mm) | 5 ¾" (146mm) |
| B | 4 ½" (114mm) | 4 ½" (114mm) | 4 ½" (114mm) |
| C | 3 ⅜" (86m) | 5 ¼" (133mm) | 3 ⅜" (86m) |
| D | 2 ¼" (54mm) | 2 ¼" (54mm) | 2 ⅛" (54mm) – Lower end of LW lens is 3/16" (5mm) above flange. |
| E | 2 ⅜" (60mm) | 2 ⅜" (60mm) | N/A |
| F | 5" (127mm) | 5 ¼" (133mm) | 4 ⅞" (127mm) |

* Center point location for integral emergency test switch (IEM6)

### Flangeless mud-in ring (CA4RFT) accessory

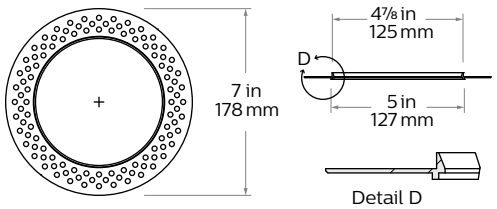


### Vandal Proof (VP) accessory

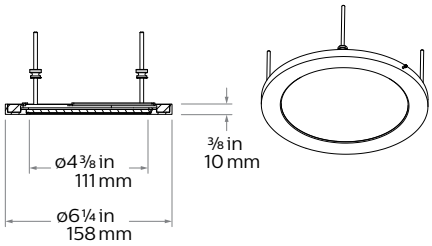

# P4R LyteProfile 4"

## Round Downlight & Lensed Wall Wash

### AirSeal (A) / Chicago plenum (LC)

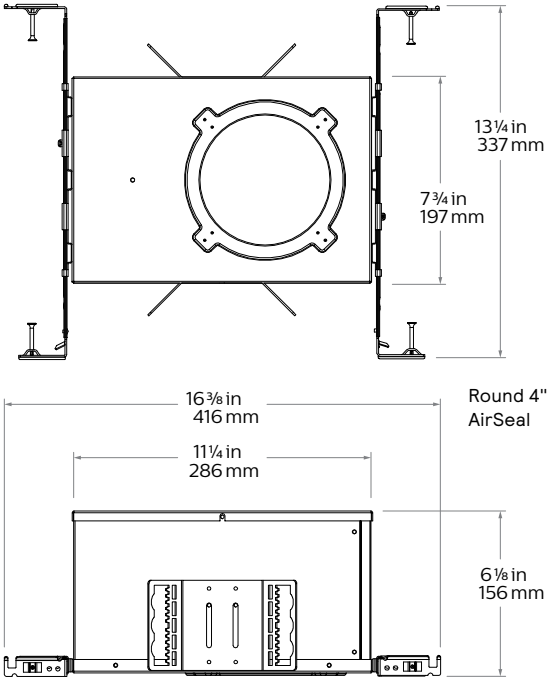


### Linear driver (RA)

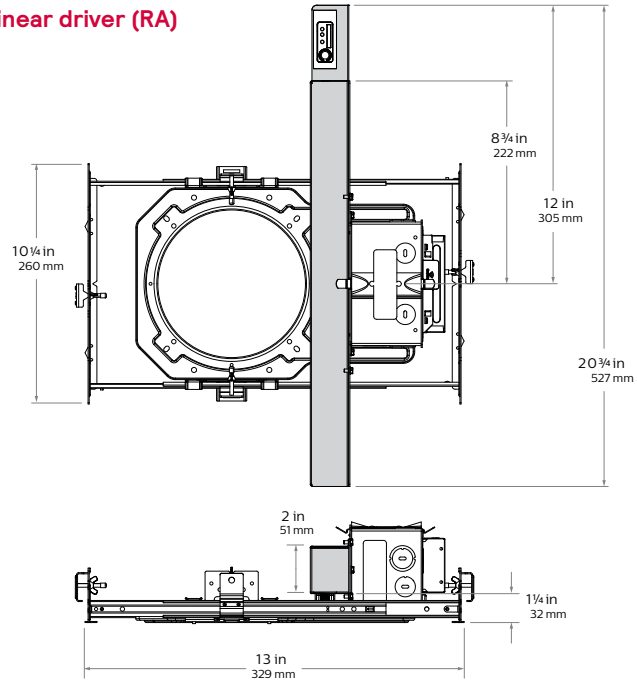


Requires either top access or 19" plenum space without sensor, and 22" with sensor.

# P4R LyteProfile 4"

## Round Downlight & Lensed Wall Wash

### Reflectors

**Specular clear (CL):** Most specular and most efficient finish, delivers maximum photometric performance but can produce a mirror image effect of the interior space.

**Comfort clear (CC):** Semi-specular finish that softens the light at the source of the reflector and creates a subtle, even luminance from the reflector cone.

**Comfort clear diffuse (CD):** Slightly diffuse clear finish, which eliminates iridescence and reduces the mirror image effect inherent with a specular finish.

**Vandal proof (VP):** Provides an elegant solution for vandal resistant needs. One piece machined aluminum ring with impact resistant clear lens. Flangeless (F) flange must be ordered. Provides the luminaire with an IK10 impact and IP65 rating.

**White (–):** (matte) Brightest aperture when illuminated and provides the smoothest transition to most ceilings when off (white is only available with a white flange).

**Black (BK):** Painted matte finish that provides the lowest aperture brightness possible and reduces source identification in a ceiling significantly.

**Shower light (SL):** Wet location rated shower light applicable in any installation requiring dead front trims, interior or exterior non-corrosive applications, or where a diffused lens at the ceiling is required (non-conductive).

### Flanges

**White (–):** (matte) Provides the smoothest transition to ceilings when off.

**Black (BK):** Painted matte finish that provides the lowest aperture brightness possible.

**Polished (P):** (matches aperture) Produces a continuous look throughout the reflector (aperture matching).

**Flangeless (F):** (flush-mount)Creates a flush, virtually seamless transition from aperture to ceiling.

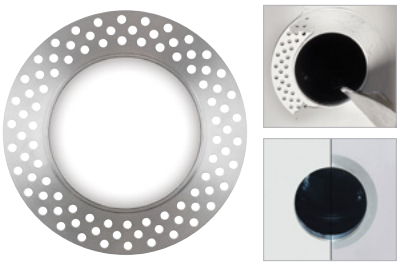

**Mud-in ring (FT):** Low profile, machined aluminum mud-in ring provides a raised rib to plaster up to and a 3/16" flange thickness. The ring is attached to the ceiling material as opposed to the frame-in kit to avoid conduction of heat and vibration which can cause yellowing or cracking of the plaster.

# P4R LyteProfile 4"

## Round Downlight & Lensed Wall Wash

**Adjustment Factors**

| Finish | CRI / CCT | Lumens | |
|---|---|---|---|
| CL = 100% | 90CRI 4000K = 106% | 4000lm = 200% | 2000lm = 100% |
| CC = 86% | 90CRI 3500K = 104% | 3500lm = 175% | 1500lm = 75% |
| CD = 91% | 90CRI 3000K = 100% | 3000lm = 150% | 1000lm = 50% |
| WH = 90% | 90CRI 2700K = 96% | 2500lm = 125% | 500lm = 25% |
| BK = 54% | | | |

### Downlight, Narrow beam, 19W LED, 90CRI, 3000K

**Candela Curves**

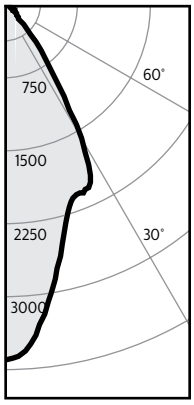


**Zonal lumens & percentages**

| Zone | Lumens | %Luminaire |
|---|---|---|
| 0-30 | 1474 | 74.9% |
| 0-40 | 1838 | 93.4% |
| 0-60 | 1965 | 99.8% |
| 0-90 | 1968 | 100.0% |

**Report[1]: P4RDL20930NCLZ10U.ies**

| | |
|---|---|
| Output Lms: | 1968lms |
| Input Watts[2]: | 18.6W |
| Efficacy: | 105.8lm/w |
| CCT[3]: | 3000K |
| CRI: | 90min |
| Beam Angle: | 54° |
| Spacing Crit.: | 0.66 |

| Angle | Mean CP | Lms |
|---|---|---|
| 0 | 2912 | |
| 5 | 2718 | |
| 10 | 2288 | 114 |
| 15 | 1855 | |
| 20 | 1664 | 318 |
| 25 | 1608 | |
| 30 | 1135 | 448 |
| 35 | 561 | |
| 40 | 214 | 461 |
| 45 | 115 | |
| 50 | 85 | 343 |
| 55 | 27 | |
| 60 | 5 | 204 |
| 65 | 2 | |
| 70 | 1 | 117 |
| 75 | 1 | |
| 80 | 0 | 66 |
| 85 | 0 | |
| 90 | 0 | 20 |

**Single unit data**

| Height to lighted plane | Initial center beam foot-candles | Beam dia. (ft)* |
|---|---|---|
| 5' | 116 | 3.3' |
| 6' | 81 | 4.0' |
| 7' | 59 | 4.6' |
| 8' | 46 | 5.3' |
| 9' | 36 | 5.9' |

*Beam diameter is where foot-candles drop to 50% of maximum.

**Multiple unit data - RCR 2**

| Spacing on center | Initial center beam foot-candles | Watts per sq.ft. |
|---|---|---|
| 5' | 90.0 | 0.82 |
| 6' | 59.0 | 0.54 |
| 7' | 42.0 | 0.39 |
| 8' | 35.0 | 0.32 |
| 9' | 28.0 | 0.26 |

38'x38'x10' Room, Workplane 2.5' above floor, 80/50/20% Reflectances

**Coefficients of utilization**

| Ceiling | 80% | | | | 70% | | 50% | | 30% | | 0% |
|---|---|---|---|---|---|---|---|---|---|---|---|
| Wall | 70 | 50 | 30 | 10 | 50 | 10 | 50 | 10 | 50 | 10 | 0 |
| RCR | Zonal cavity method - Effective floor reflectance = 20% | | | | | | | | | | |
| Room Cavity Ratio 0 | 119 | 119 | 119 | 119 | 116 | 116 | 111 | 111 | 106 | 106 | 100 |
| 1 | 114 | 111 | 109 | 106 | 109 | 105 | 105 | 101 | 101 | 98 | 94 |
| 2 | 108 | 103 | 100 | 96 | 102 | 95 | 99 | 93 | 96 | 91 | 88 |
| 3 | 103 | 97 | 92 | 88 | 95 | 87 | 93 | 86 | 90 | 85 | 82 |
| 4 | 98 | 91 | 85 | 81 | 89 | 81 | 87 | 80 | 85 | 79 | 76 |
| 5 | 93 | 85 | 79 | 75 | 84 | 75 | 82 | 74 | 81 | 73 | 71 |
| 6 | 89 | 80 | 74 | 70 | 79 | 70 | 78 | 69 | 76 | 69 | 67 |
| 7 | 84 | 75 | 69 | 65 | 75 | 65 | 73 | 65 | 72 | 64 | 63 |
| 8 | 80 | 71 | 65 | 61 | 71 | 61 | 69 | 61 | 68 | 61 | 59 |
| 9 | 77 | 67 | 61 | 58 | 67 | 57 | 66 | 57 | 65 | 57 | 56 |
| 10 | 73 | 64 | 58 | 54 | 63 | 54 | 63 | 54 | 62 | 54 | 53 |

### Downlight, Medium beam, 19W LED, 90CRI, 3000K

**Candela Curves**

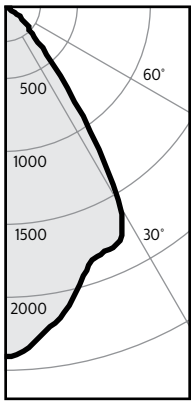


**Zonal lumens & percentages**

| Zone | Lumens | %Luminaire |
|---|---|---|
| 0-30 | 1271 | 65.4% |
| 0-40 | 1740 | 89.5% |
| 0-60 | 1941 | 99.8% |
| 0-90 | 1944 | 100.0% |

**Report[1]: P4RDL20930MCLZ10U.ies**

| | |
|---|---|
| Output Lms: | 1944lms |
| Input Watts[2]: | 18.6W |
| Efficacy: | 104.5lm/w |
| CCT[3]: | 3000K |
| CRI: | 90min |
| Beam Angle: | 66° |
| Spacing Crit.: | 1.06 |

| Angle | Mean CP | Lms |
|---|---|---|
| 0 | 1925 | |
| 5 | 1857 | |
| 10 | 1739 | 173 |
| 15 | 1580 | |
| 20 | 1465 | 446 |
| 25 | 1449 | |
| 30 | 1235 | 653 |
| 35 | 745 | |
| 40 | 361 | 468 |
| 45 | 192 | |
| 50 | 122 | 160 |
| 55 | 35 | |
| 60 | 6 | 41 |
| 65 | 2 | |
| 70 | 1 | 3 |
| 75 | 1 | |
| 80 | 0 | 1 |
| 85 | 0 | |
| 90 | 0 | 0 |

**Single unit data**

| Height to lighted plane | Initial center beam foot-candles | Beam dia. (ft)* |
|---|---|---|
| 5' | 77 | 5.3' |
| 6' | 53 | 6.4' |
| 7' | 39 | 7.4' |
| 8' | 30 | 8.5' |
| 9' | 24 | 9.5' |

*Beam diameter is where foot-candles drop to 50% of maximum.

**Multiple unit data - RCR 2**

| Spacing on center | Initial center beam foot-candles | Watts per sq.ft. |
|---|---|---|
| 5' | 88.0 | 0.82 |
| 6' | 58.0 | 0.54 |
| 7' | 41.0 | 0.39 |
| 8' | 25.0 | 0.32 |
| 9' | 27.0 | 0.26 |

38'x38'x10' Room, Workplane 2.5' above floor, 80/50/20% Reflectances

**Coefficients of utilization**

| Ceiling | 80% | | | | 70% | | 50% | | 30% | | 0% |
|---|---|---|---|---|---|---|---|---|---|---|---|
| Wall | 70 | 50 | 30 | 10 | 50 | 10 | 50 | 10 | 50 | 10 | 0 |
| RCR | Zonal cavity method - Effective floor reflectance = 20% | | | | | | | | | | |
| Room Cavity Ratio 0 | 119 | 119 | 119 | 119 | 116 | 116 | 111 | 111 | 106 | 106 | 100 |
| 1 | 113 | 110 | 108 | 106 | 108 | 104 | 104 | 101 | 100 | 98 | 93 |
| 2 | 107 | 102 | 98 | 95 | 101 | 94 | 97 | 91 | 94 | 90 | 86 |
| 3 | 102 | 95 | 90 | 86 | 94 | 85 | 91 | 84 | 88 | 82 | 79 |
| 4 | 96 | 88 | 82 | 78 | 87 | 78 | 85 | 77 | 83 | 76 | 73 |
| 5 | 91 | 82 | 76 | 72 | 81 | 71 | 79 | 71 | 78 | 70 | 68 |
| 6 | 86 | 77 | 70 | 66 | 76 | 66 | 74 | 65 | 73 | 65 | 63 |
| 7 | 81 | 72 | 65 | 61 | 71 | 61 | 70 | 60 | 68 | 60 | 58 |
| 8 | 77 | 67 | 61 | 57 | 67 | 56 | 65 | 56 | 64 | 56 | 54 |
| 9 | 73 | 63 | 57 | 53 | 63 | 53 | 62 | 52 | 61 | 52 | 51 |
| 10 | 70 | 59 | 53 | 49 | 59 | 49 | 58 | 49 | 57 | 49 | 47 |

1. Tested using absolute photometry as specified in LM79: IESNA Approved Method for the Electrical and Photometric Measurements of Solid-State Lighting Products.
2. Wattage: controlled to within 5%
3. Correlated Color Temperature: within specs as defined in ANSI_NEMA_ANSLG C78.377-2008: Specifications for the Chromaticity of Solid State Lighting Products.

# P4R LyteProfile 4"

## Round Downlight & Lensed Wall Wash

**Adjustment Factors**

| Finish | CRI / CCT | Lumens | |
|---|---|---|---|
| CL = 100% | 90CRI 4000K = 106% | 4000lm = 200% | 2000lm = 100% |
| CC = 86% | 90CRI 3500K = 104% | 3500lm = 175% | 1500lm = 75% |
| CD = 91% | 90CRI 3000K = 100% | 3000lm = 150% | 1000lm = 50% |
| WH = 90% | 90CRI 2700K = 96% | 2500lm = 125% | 500lm = 25% |
| BK = 54% | | | |

### Downlight, Wide beam, 19W LED, 90CRI, 3000K

**Candela Curves**

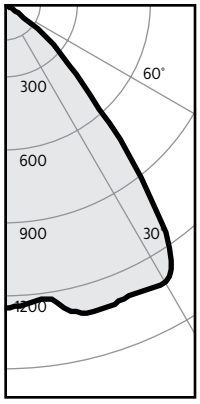


**Zonal lumens & percentages**

| Zone | Lumens | %Luminaire |
|---|---|---|
| 0-30 | 875 | 49.8% |
| 0-40 | 1422 | 81.0% |
| 0-60 | 1752 | 99.8% |
| 0-90 | 1756 | 100.0% |

**Report[1]: P4RDL20930WCLZ10U.ies**

| | |
|---|---|
| Output Lms: | 1756lms |
| Input Watts[2]: | 16.1W |
| Efficacy: | 109.1lm/w |
| CCT[3]: | 3000K |
| CRI: | 90min |
| Beam Angle: | 82° |
| Spacing Crit.: | 1.42 |

| Angle | Mean CP | Lms |
|---|---|---|
| 0 | 997 | |
| 5 | 983 | |
| 10 | 996 | 94 |
| 15 | 1049 | |
| 20 | 1048 | 296 |
| 25 | 1045 | |
| 30 | 1052 | 485 |
| 35 | 919 | |
| 40 | 584 | 547 |
| 45 | 332 | |
| 50 | 185 | 266 |
| 55 | 56 | |
| 60 | 9 | 64 |
| 65 | 3 | |
| 70 | 1 | 3 |
| 75 | 1 | |
| 80 | 0 | 1 |
| 85 | 0 | |
| 90 | 0 | 0 |

**Single unit data**

| Height to lighted plane | Initial center beam foot-candles | Beam dia. (ft)* |
|---|---|---|
| 5' | 40 | 7.1' |
| 6' | 28 | 8.5' |
| 7' | 20 | 9.9' |
| 8' | 16 | 11.4' |
| 9' | 12 | 12.8' |

*Beam diameter is where foot-candles drop to 50% of maximum.

**Multiple unit data - RCR 2**

| Spacing on center | Initial center beam foot-candles | Watts per sq.ft. |
|---|---|---|
| 5' | 78.0 | 0.71 |
| 6' | 51.0 | 0.47 |
| 7' | 37.0 | 0.33 |
| 8' | 31.0 | 0.28 |
| 9' | 20.0 | 0.22 |

38'x38'x10' Room, Workplane 2.5' above floor, 80/50/20% Reflectances

**Coefficients of utilization**

| Ceiling | 80% | | | | 70% | | 50% | | 30% | | 0% |
|---|---|---|---|---|---|---|---|---|---|---|---|
| Wall | 70 | 50 | 30 | 10 | 50 | 10 | 50 | 10 | 50 | 10 | 0 |
| RCR | Zonal cavity method - Effective floor reflectance = 20% | | | | | | | | | | |
| Room Cavity Ratio 0 | 119 | 119 | 119 | 119 | 116 | 116 | 111 | 111 | 106 | 106 | 100 |
| 1 | 113 | 110 | 107 | 104 | 107 | 103 | 103 | 99 | 100 | 96 | 92 |
| 2 | 106 | 100 | 96 | 92 | 99 | 91 | 95 | 89 | 92 | 87 | 83 |
| 3 | 100 | 92 | 86 | 82 | 91 | 81 | 88 | 80 | 85 | 79 | 76 |
| 4 | 93 | 85 | 78 | 73 | 83 | 73 | 81 | 72 | 79 | 71 | 69 |
| 5 | 87 | 78 | 71 | 66 | 77 | 66 | 75 | 65 | 73 | 64 | 62 |
| 6 | 82 | 72 | 65 | 60 | 71 | 60 | 69 | 59 | 68 | 59 | 57 |
| 7 | 77 | 66 | 59 | 54 | 65 | 54 | 64 | 54 | 63 | 54 | 52 |
| 8 | 72 | 61 | 54 | 50 | 61 | 50 | 59 | 49 | 58 | 49 | 47 |
| 9 | 68 | 57 | 50 | 45 | 56 | 45 | 55 | 45 | 54 | 45 | 43 |
| 10 | 64 | 53 | 46 | 42 | 53 | 42 | 52 | 42 | 51 | 42 | 40 |

### Lensed Wall Wash, Wide beam, 19W LED, 90CRI, 3000K

**Candela Curve**

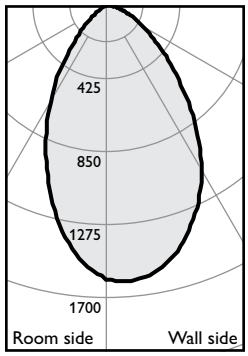


**Report[1]: P4RLW20930WCLZ10U.ies**

| | |
|---|---|
| Output Lms: | 1966lms |
| Input Watts[2]: | 19.0W |
| Efficacy: | 103.5lm/w |
| CCT[3]: | 3000K |
| CRI: | 90min |

**Multiple unit data**
Footcandles on wall

| Distance from ceiling in feet | 2' from wall | 2' on ctr. | |
|---|---|---|---|
| 1 | 41 | 41 | 41 |
| 2 | 73 | 74 | 73 |
| 3 | 74 | 76 | 74 |
| 4 | 61 | 63 | 61 |
| 5 | 46 | 48 | 46 |
| 6 | 34 | 36 | 34 |
| 7 | 26 | 27 | 26 |
| 8 | 20 | 21 | 20 |
| 9 | 16 | 17 | 16 |
| 10 | 13 | 14 | 13 |
| 12 | 11 | 11 | 11 |
| 14 | 9 | 10 | 9 |

**Multiple unit data**
Footcandles on wall

| Distance from ceiling in feet | 3' from wall | 3' on ctr. | |
|---|---|---|---|
| 1 | 12 | 11 | 12 |
| 2 | 26 | 25 | 26 |
| 3 | 34 | 33 | 34 |
| 4 | 36 | 35 | 36 |
| 5 | 32 | 33 | 32 |
| 6 | 27 | 28 | 27 |
| 7 | 23 | 23 | 23 |
| 8 | 19 | 19 | 19 |
| 9 | 15 | 16 | 15 |
| 10 | 13 | 13 | 13 |
| 12 | 11 | 11 | 11 |
| 14 | 9 | 10 | 9 |

1. Tested using absolute photometry as specified in LM79: IESNA Approved Method for the Electrical and Photometric Measurements of Solid-State Lighting Products.
2. Wattage: controlled to within 5%
3. Correlated Color Temperature: within specs as defined in ANSI_NEMA_ANSLG C78.377-2008: Specifications for the Chromaticity of Solid State Lighting Products.

© 2023 Signify Holding. All rights reserved. The information provided herein is subject to change, without notice. Signify does not give any representation or warranty as to the accuracy or completeness of the information included herein and shall not be liable for any action in reliance thereon. The information presented in this document is not intended as any commercial offer and does not form part of any quotation or contract, unless otherwise agreed by Signify.

Signify North America Corporation
400 Crossing Blvd, Suite 600
Bridgewater, NJ 08807
Telephone: 800-555-0050

Signify Canada Ltd.
281 Hillmount Road,
Markham, ON, Canada L6C 2S3
Telephone: 800-668-9008

All trademarks are owned by Signify Holding or their respective owners.