LIGHTOLIER by signify

Downlighting

Calculite 3"

C3SWW Square wall wash

Project:
Location:
Cat.No:
Type:
Lamps: Qty:
Notes:

Calculite 3" features industry leading visual comfort, excellent uniform illumination over time, and patented installation flexibility. Efficient and effective optical system distributes 70% of the light on the wall providing a harmonious and uniform pattern of light on the wall.

Complete luminaire = Frame + Engine + Trim + Accessories (optional)
Complete remodel luminaire = Engine + Trim + Accessories (optional)

Frame

Note: For remodeler installations, order light engine and trim only (no frame needed).

example: 3SAS

Series	Installation	Voltage / Options
3S		
3S Uniframe 3" square frame	**N** New Construction Non-IC	**–** Universal (120V/277V) **EM** Emergency (see pg 2 for details & limitations)[1] **IP** Interact Pro ready (for 0-10V engine only)[2] **LC** Chicago plenum **3** 347V (not compatible with ELV dimming) **3IP** 347V with Interact Pro (for 0-10V engine only)[2]
	A AirSeal IC (1000lm max)	**–** Standard universal (120V/277V)
		S Shallow universal (120V/277V)[3]

Engine

example: C3L07930SZ10US

Series	Lumens	CRI	CCT	Beam	Dimming	Voltage	Plenum
C3L		9		S			
C3L Calculite 3" light engine	**05** 500lm **07** 750lm **10** 1000lm **15** 1500lm[5]	**9** 90CRI	**27** 2700K **30** 3000K **35** 3500K **40** 4000K	**S** Square	**Z10** 0-10V 1% **L** Lutron PEQ0 (Dim to 0.1%)	**U** Universal 120V/277V/347V	**–** Standard
	10 1000lm	**9** 90CRI	**D2W** 3000K-1800K[5]		**E** Electronic low voltage	**1** 120V	
	07 750lm	**9** 90CRI	**27** 2700K **30** 3000K **35** 3500K **40** 4000K	**S** Square	**Z10** 0-10V 1%	**U** Universal 120V/277V/347V	**R** Remodeler[6] **S** Shallow[3]
					E ELV	**1** 120V	

Trim

example: C3SLWDDFS

Series	Style	Reflector	Flange	Type
C3S	LW			
C3S Calculite 3" square trim	**LW** Lensed wall wash[7] (for remodeler & new construction)	**CL** Specular clear **CC** Comfort clear **CD** Comfort clear diffuse **CZ** Champagne bronze (anodized)	**–** White (matte) **F** Flangeless[8]	**–** Standard depth with 50° cutoff
		BK Black (matte)	**B** Black (matte) **F** Flangeless[8]	
		WH White (matte)	**–** White (matte) **F** Flangeless[8]	
		WT Textured white (painted) **BT** Textured black (painted) **BZ** Bronze (painted) **D** Aluminum diffuse (painted)	**–** White (matte) **P** Matching reflector **F** Flangeless[8]	

Accessories

CA3SFT
Mud-in ring for use in flangeless installs
(ordered with a flangeless trim)

SWZDT
SpaceWise wireless controller with dwell time functionality
(compatible with all 0-10V options, see SWZDT spec sheet)

SRAINT
InterAct Office accessory
(for use with Lightolier UniFrame 0-10V frames)

(order & install separately)

1. Emergency (EM) frame includes emergency battery with ceiling mounted test switch (no reflector mountable test switch). Requires above ceiling access. Ceiling mount test switch only (see page 2 for details and limitations).
2. InterAct Pro (IP & 3IP) requires above ceiling access.
3. Must order shallow IC frame (S), shallow engine (S) for complete shallow assembly. Standard depth trims are compatible with shallow frame.
4. The 1500lm (15) and 1800lm (18) options are not available with standard AirSeal IC frame (3SA-).
5. Dim to Warm (D2W) engines are for Non-IC (N) frames only.
6. For remodeler installations, order light engine and trim only (no frame needed).
7. Lensed wall wash (LW) trims have a 1500lm (15) engine limit and should not be used in Airseal configurations.
8. Flangeless (F) trims require CA3SFT mud-in accessory for installation.

IC INSULATION CONTACT · c UL us LISTED · WET LOCATION · RoHS COMPLIANT · interact ready.

C3SWW Calculite 3"

Square wall wash

Frame-in-kits

New construction:
Galvanized stamped steel for dry or plaster ceilings. Preinstalled telescoping mounting bars from 13" to 24". For 4' distances, use 1/2" EMT, 1-1/2" x 1/2" U or C channel.

Max ceiling thickness is 1.25" (32mm)

Patented install mounting frame:

- Pre-installed mounting bars for fast and tool-less installs into T-grid & hat channel ceilings.
- Close-cut aperture design eliminates possibility of gap between ceiling opening and reflector flange.
- Separate wiring compartment for wiring frame to building allows inspection prior to light engine install.
- Simple plug-and-play connection between frame and light engine from below ceiling.

Dimming

All configurations are FCC Class A unless otherwise specified.

- Advance 0-10V 1% (Z10)
- Lutron PEQ0 Hi-lume Premier 0.1% EcoSystem
- Electronic low voltage (ELV) - Remodel and AirSeal IC Shallow are FCC Class B
- Dim to Warm (D2W) - option changes CCT from 3000K to 1800K gradually as it dims

Optical systems

Quality of light: 2 SDCM ensures color consistency from fixture to fixture and over the luminaire's long lifetime.

Construction: Precision formed high grade aluminum reflectors with options for anodized or painted finishes.

Comfort throughout the space:
True 50° physical cutoff.

SpaceWiseDT (SWZDT)

- Remote mounted and centralized SWZDT module accessory controls multiple luminaires.
- Compatible with any 0-10v driver
- 120-347V mains input voltage
- Up to 730VA load at 120V

Interact Office (SRAINT)

- Provides Interact Office functionality either remotely to a group of luminaires, or to individual luminaires
- Compatible with any 0-10v driver
- 120-347V mains input voltage

Interact Pro (IP)

- Requires above ceiling access for service.
- Interact Pro brings the power of connected lighting to small and medium businesses without the complexity usually associated with connected lighting.
- Interact Pro includes an app, a portal and a broad portfolio of wireless luminaires, lamps and retrofit kits all working on the same system.
- Commissioning via Interact Pro App (Android or iPhone).
- Prepare commissioning remotely via Interact Pro portal.
- Requires compatible Interact Pro Gateway and internet connectivity for commissioning.
- Compatible with UID8451/10 ZigBee Greenpower wireless dimmer switch.
- Compatible with wireless Occ sensor (OCC SENSOR IA CM IP42 WH 10/1) or wireless Day/Occ sensor (OCC MULTI SENSOR IA CM WH 10/1).
- For more information on Interact Pro visit: www.interact-lighting.com/pro.
- For more information on Interact Ready visit: www.philips.com/interact-ready.

Light engine

Quick connect power pack allow for easy installation and replacement from below ceiling with no need for additional wiring. This allows for:

- Frame and ceiling installation to be performed while still finalizing details such as lumen packages, CCT and control type.
- Easy replacement of electronics at end of life with minimal wasted material and labor required.
- Ease and upgradability of technology.
- Predicted 70% lumen maintenance to 57,000 hrs.
- Max operating ambient temperature of 30°C.

Options and accessories

Flangeless mud-in ring: Use **CA3SFT** for use with flangless plaster installations.

Labels and listings

- cULus listed for wet locations
- CCEA (frames with *LC suffix)

Warranty

5 year limited warranty

Visit Signify.com/warranties for more information on Signify's standard 5-year limited warranty on complete luminaire systems.

0-10V electrical tables

Light engine	Input volts	Input current	Drive current	Input power
C3L05_Z10U	120 V	0.06 A	150 mA	7.0 W
	277 V	0.02 A		
C3L07_Z10U	120 V	0.08 A	220 mA	9.5 W
	277 V	0.03 A		
C3L10_Z10U	120 V	0.12 A	330 mA	13.6 W
	277 V	0.05 A		
C3L15_Z10U	120 V	0.16 A	450 mA	18.6 W
	277 V	0.07 A		
C3L18_Z10U	120 V	0.17 A	500 mA	20.4 W
	277 V	0.07 A		
C3L07_Z10US C3L07_Z10UR	120 V	0.08 A	220 mA	9.4 W
	277 V	0.03 A		
C3L10_Z10UR C3L10_Z10US	120 V	0.12 A	330 mA	14.1 W
	277 V	0.05 A		

ELV electrical tables

Light engine	Input volts	Input current	Drive current	Input power
C3L05_E1	120 V	0.05 A	150 mA	5.4 W
	277 V	0.02 A		
C3L07_E1	120 V	0.08 A	220 mA	8.7 W
	277 V	0.03 A		
C3L10_E1	120 V	0.11 A	330 mA	13.2 W
	277 V	0.05 A		
C3L15_E1	120 V	0.15 A	450 mA	17.4 W
	277 V	0.06 A		
C3L18_E1	120 V	0.17 A	500 mA	19.7 W
	277 V	0.07 A		
C3_A05_E1S C3_A05_E1R	120 V	0.08 A	220 mA	8.7 W
	277 V	0.03 A		
C3_A10_E1R C3_A10_E1S	120 V	0.11 A	330 mA	13.2 W
	277 V	0.05 A		

Lutron electrical tables

Light engine	Input volts	Input current	Drive current	Input power
C3L05_LU	120 V	0.06 A	150 mA	6.2 W
	277 V	0.02 A		
C3L07_LU	120 V	0.08 A	220 mA	8.8 W
	277 V	0.03 A		
C3L10_LU	120 V	0.12 A	330 mA	13.0 W
	277 V	0.05 A		
C3L15_LU	120 V	0.15 A	450 mA	17.7 W
	277 V	0.06 A		
C3L18_LU	120 V	0.17 A	500 mA	19.8 W
	277 V	0.07 A		

C3SWW Calculite 3"

Square wall wash

New construction (N)

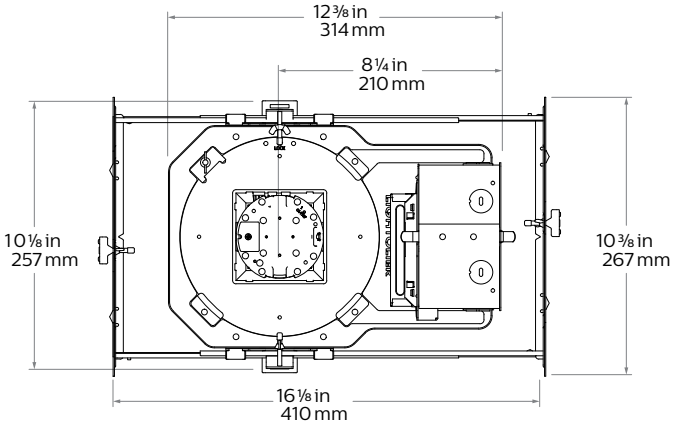

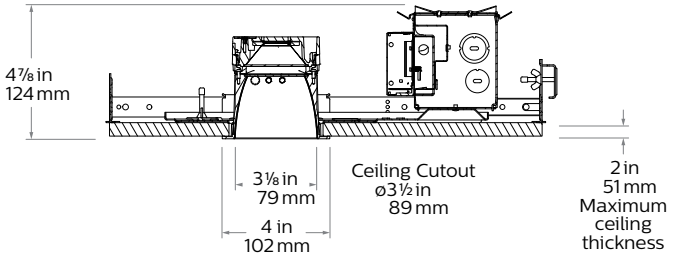

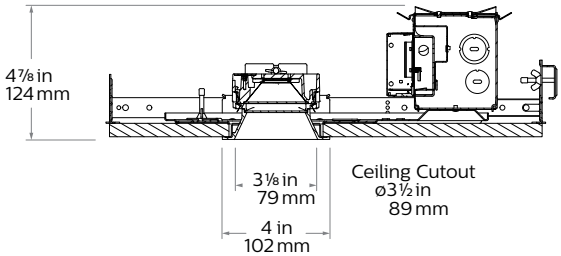

Standard IC (A) and Chicago plenum (LC)

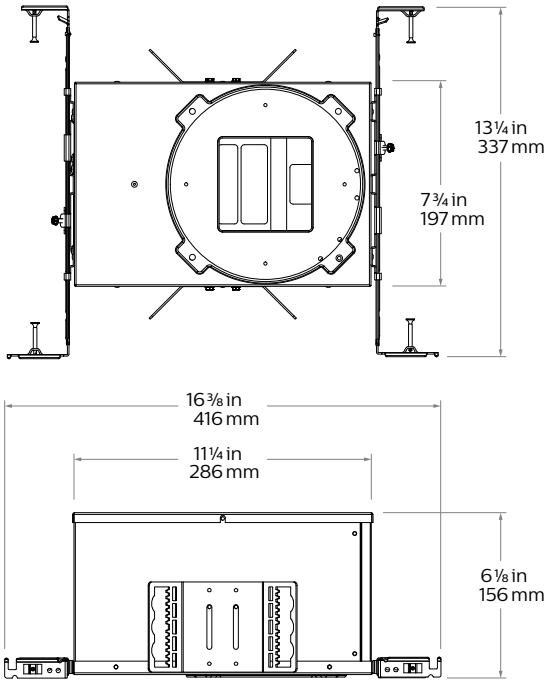

Shallow IC (S)

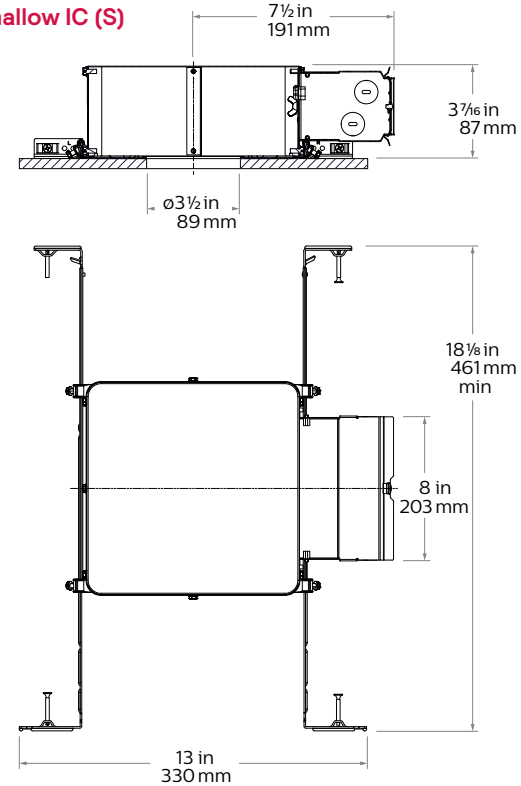

Remodeler (R)

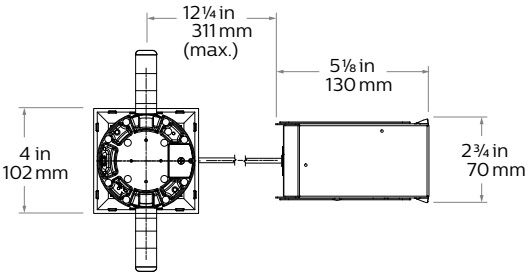

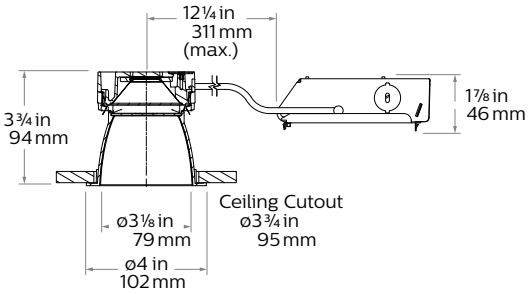

Flangeless mud-in ring (CA3SFT) accessory

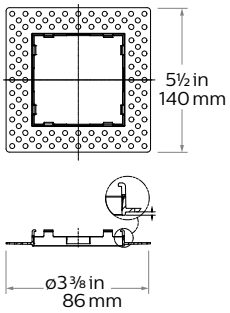

C3SWW Calculite 3"

Square wall wash

Polished Reflectors

Shown as round reflectors but represent the finish of Calculite square reflectors.

Specular clear (CL): Most specular and most efficient finish, delivers maximum photometric performance but can produce a mirror image effect of the interior space.

Champagne bronze (CZ): Semi-specular finish that softens light at the source of the reflector while providing a warmer reflector appearance (slightly warmer).

Comfort clear (CC): Semi-specular finish that softens the light at the source of the reflector and creates a subtle, even luminance from the reflector cone.

White (WH): (matte) Brightest illuminated aperture and provides the smoothest transition to most ceilings when off (white is only available with a white flange).

Comfort clear diffuse (CD): Slightly diffuse clear finish, that eliminates iridescence and reduces the mirror image effect inherent with specular finishes.

Black (BK): (anodized) Specular finish that provides the lowest aperture brightness possible and significantly reduces source identification in a ceiling.

Textured Reflectors

Shown as square reflectors but represent the finish of Calculite round reflectors.

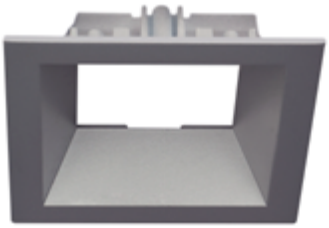

Aluminum diffuse (D):
Matte painted finish.

Textured white (WT):
Matte painted finish.

Bronze (BZ):
Matte painted finish.

Textured black (BT):
Matte painted finish.

Flanges

White (–): (matte) Provides the smoothest transition to ceilings when off.

Polished (P): (matches aperture) Produces a continuous look throughout the reflector (aperture matching).

Flangeless (F): (flush-mount)Creates a flush, virtually seamless transition from aperture to ceiling.

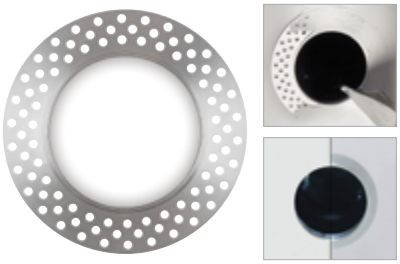

Mud-in ring (FT): Low profile, machined aluminum mud-in ring provides a raised rib to plaster up to and a 3/16" flange thickness. The ring is attached to the ceiling material as opposed to the frame-in kit to avoid conduction of heat and vibration which can cause yellowing or cracking of the plaster.

C3SWW Calculite 3"

Square wall wash

Adjustment factors

Finish	CCT	Lumens
WT = 110%	90CRI 4000K = 104%	1500lm = 130%
WH = 109%	90CRI 3500K = 100%	1000lm = 100%
CL = 109%	90CRI 3000K = 96%	750lm = 70%
CD = 109%	90CRI 2700K = 90%	500lm = 50%
BZ = 91%		
CC = 100%		
D = 100%		
BZ = 91%		
BT = 89%		
BK = 89%		

Wall wash, 1000lm engine, 56.0 lm/W

Candela Curve

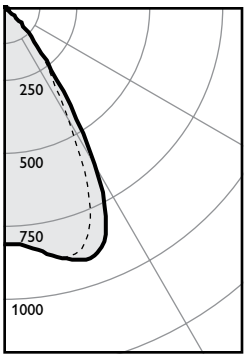

Frame: **3SN**
Engine: **C3L10935SZ10U**
Trim: **C3SLWCC**

Output lumens:	664 lms
Input watts:	13.6 W
CRI:	90 min
CCT[1]:	3500K

Efficacy: **48.8 lm/w**
Report[2]: 1783GFR

Multiple unit data
Footcandles on wall

Distance from ceiling in feet	2' from wall, 3' on ctr.		
1	19	16	19
2	26	24	26
3	23	21	23
4	17	16	17
5	11	12	11
6	8	8	8
7	6	6	6
8	4	4	4
9	3	3	3
10	3	3	3
12	2	2	2
14	2	2	2

Multiple unit data
Footcandles on wall

Distance from ceiling in feet	2' from wall, 4' on ctr.		
1	16	10	16
2	22	15	22
3	19	14	19
4	14	12	14
5	9	9	9
6	6	7	6
7	5	5	5
8	4	4	4
9	3	3	3
10	2	2	2
12	2	2	2
14	2	2	2

Multiple unit data
Footcandles on wall

Distance from ceiling in feet	2' from wall, 5' on ctr.		
1	16	6	16
2	21	10	21
3	18	10	18
4	13	8	13
5	8	7	8
6	6	5	6
7	4	4	4
8	3	3	3
9	2	3	2
10	2	2	2
12	2	2	2
14	1	1	1

1. Correlated Color Temperature within specs as defined in ANSI_NEMA_ANSLG C78.377-2008: Specifications for the Chromaticity of Solid State Lighting Products.
2. Tested using absolute photometry as specified in LM79: IESNA Approved Method for the Electrical and Photometric Measurements of Solid-State Lighting Products.

The information presented in this document is not intended as any commercial offer and does not form part of any quotation or contract.

signify

© 2019 Signify Holding. All rights reserved. This document contains information relating to the product portfolio of Signify which information may be subject to change. No representation or warranty as to the accuracy or completeness of the information included herein is given and any liability for any action in reliance thereon is disclaimed. All trademarks are owned by Signify Holding or their respective owners.

Signify North America Corporation
200 Franklin Square Drive,
Somerset, NJ 08873
Telephone 855-486-2216

Signify Canada Ltd.
281 Hillmount Road,
Markham, ON, Canada L6C 2S3
Telephone 800-668-9008