Product data sheet

Specifications

Harmony XB5, Flush mounted push button head, plastic, projecting, white, 30mm, spring return, unmarked, dark grey bezel

ZB5FL1

Product availability: Non-Stock - Not normally stocked in distribution facility

Main

Range of Product	Harmony XB5
Product or Component Type	Head for non-illuminated push-button
Device short name	ZB5
Product Compatibility	ZBYF... ZBZF32 ZBZF33 ZB5AZ
Bezel material	Dark grey plastic
Mounting diameter	1.2 in (30.5 mm)
Head type	Built-in-flush
Sale per indivisible quantity	1
Shape of signaling unit head	Round
Type of operator	spring return
Operator profile	White projecting, unmarked

Complementary

CAD overall width	1.5 in (37 mm)
CAD overall height	1.5 in (37 mm)
CAD overall depth	1.3 in (32 mm)
Product Weight	0.068 lb(US) (0.031 kg)
Mechanical durability	10000000 cycles
Electrical composition code	C1 9 single front mounting C2 9 single and double front mounting C11 3 single front mounting C15 1 single front mounting SF1 3 single front mounting
Device presentation	Basic element

Environment

Protective treatment	TH
Ambient Air Temperature for Storage	-40…158 °F (-40…70 °C)
Ambient Air Temperature for Operation	-40…158 °F (-40…70 °C)
Overvoltage category	Class II conforming to IEC 60536

Price is “List Price” and may be subject to a trade discount – check with your local distributor or retailer for actual price.

Disclaimer: This documentation is not intended as a substitute for and is not to be used for determining suitability or reliability of these products for specific user applications

IP degree of protection	IP66 IEC 60529 IP67 IEC 60529 IP69 IEC 60529 IP69K ISO 20653 Type 13 UL 50 E Type 12 UL 50 E Type 4 UL 50 E Type 4X UL 50 E
Resistance to high pressure washer	1015.3 psi (7000000 Pa) 131 °F (55 °C) 0.1 m
IK degree of protection	IK03 conforming to IEC 50102
Standards	IEC 60947-5-1 JIS C8201-5-1 IEC 60947-1 UL 508 IEC 60947-5-4 CSA C22.2 No 14 JIS C8201-1
Product Certifications	CSA DNV BV LROS (Lloyds register of shipping) UL Listed
Shock resistance	30 gn 18 ms) half sine wave acceleration IEC 60068-2-27 50 gn 11 ms) half sine wave acceleration IEC 60068-2-27 25 gn 6 ms) 1000 shocks on each axis IEC 60068-2-27
Vibration resistance	5 gn (f= 10…500 Hz) conforming to IEC 60068-2-6 2 mm peak to peak (f= 2…10 Hz) conforming to IEC 60068-2-6

Ordering and shipping details

Category	US10CS222467
Discount Schedule	0CS2
GTIN	3606481340467
Returnability	Yes
Country of origin	FR

Packing Units

Unit Type of Package 1	PCE
Nbr. of units in pkg.	1
Package 1 Height	2.10 in (5.33 cm)
Package 1 Width	1.70 in (4.32 cm)
Package 1 Length	2.20 in (5.59 cm)
Package weight(Lbs)	0.07 lb(US) (0.03 kg)

Contractual warranty

Warranty (in months)	18

Environmental Data

Schneider Electric aims to achieve Net Zero status by 2050 through supply chain partnerships, lower impact materials, and circularity via our ongoing “Use Better, Use Longer, Use Again” campaign to extend product lifetimes and recyclability.

Environmental Data explained

How we assess product sustainability

Environmental footprint

Total lifecycle Carbon footprint	**0.3 kg CO2 eq.**
Carbon footprint of the manufacturing phase [A1 to A3]	**0.2 kg CO2 eq.**
Carbon footprint of the distribution phase [A4]	**0 kg CO2 eq.**
Carbon footprint of the installation phase [A5]	**0 kg CO2 eq.**
Carbon footprint of the use phase [B2, B3, B4, B6]	**0 kg CO2 eq.**
Carbon footprint of the end-of-life phase [C1 to C4]	**0.1 kg CO2 eq.**

Use Better

Materials and Substances

Average percentage of recycled plastic content	**6 %**
Average percentage of recycled metal content	**29 %**
Packaging made with recycled cardboard	**Yes**
Packaging without single use plastic	**Yes**
EU RoHS Directive	**Compliant By Exemption**
REACh Regulation	**Reference contains Substances of Very High Concern above the threshold**
California proposition 65	**WARNING: This product can expose you to chemicals including: Di-isodecyl phthalate (DIDP), which is known to the State of California to cause birth defects or other reproductive harm. For more information go to www.P65Warnings.ca.gov**

Use Longer

Lifetime extension

Repair	**No**

Use Again

Repack and remanufacture

Recyclability potential, in %	**0**
Circularity Profile	**End of Life Information**
Take-back	**No**

Dimensions Drawings

Dimensions

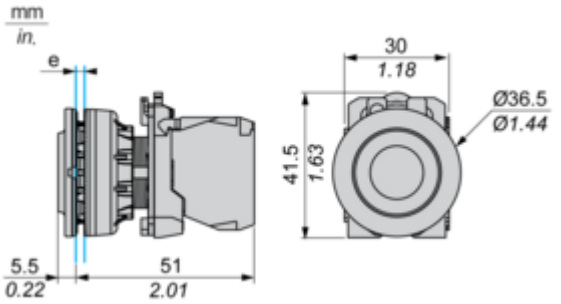

e: Clamping thickness: 1 to 6 mm / 0.04 to 0.24 in.

Mounting and Clearance

Panel Cut-out for Pushbuttons, Switches and Pilot Lights (Finished Holes, Ready for Installation)

Connection by Screw Clamp Terminals or Plug-in Connectors

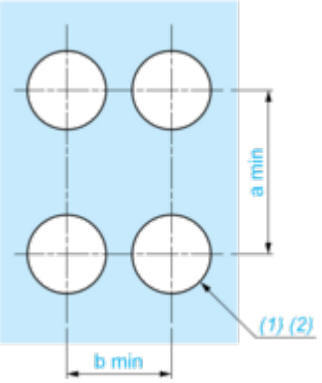

(1) Diameter on finished panel or support

(2) Ø30.75 mm recommended (Ø30.5 $_{0}^{+0.5}$) / Ø1.21 in. recommended (Ø1.20 in. $_{0}^{+0.0196}$)

Connections	a in mm	a in in.	b in mm	b in in.
By screw clamp terminals or plug-in connector	40	1.57	40	1.57
By Faston connectors	45	1.77	40	1.57

Technical Description

Electrical Composition Corresponding to Code C1

Electrical Composition Corresponding to Code C2

Electrical Composition Corresponding to Codes C9, C11, SF1 and SR1

Electrical Composition Corresponding to Code C15

1 N/O

1 N/C

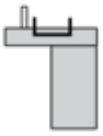

1 N/O + N/C or 1 N/O + N/O or 1 N/C + N/C

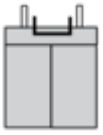

Legend

Single contact

Double contact

Light block

Possible location