Product data sheet

Specifications

Selector switch head, Harmony XB5, plastic, white, 22mm, 3 positions, spring return from right to center, grey bezel

ZB5AD801C0

Product availability: Non-Stock - Not normally stocked in distribution facility

Main

Range of Product	Harmony XB5
Product or Component Type	Head for selector switch
Device short name	ZB5
Bezel material	Plastic colour plated grey
Mounting diameter	0.9 in (22 mm)
Head type	Standard
Sale per indivisible quantity	1
Shape of signaling unit head	Round
Type of operator	Right to centre spring return
Operator profile	White standard handle
Operator position information	3 positions +/- 45°

Complementary

CAD overall width	1.1 in (29 mm)
CAD overall height	1.1 in (29 mm)
CAD overall depth	1.8 in (46 mm)
Product Weight	0.037 lb(US) (0.017 kg)
Mechanical durability	1000000 cycles
Station name	XALD 1...5 cut-outs XALK 2...5 cut-outs
Electrical composition code	C3 6 single front mounting C4 6 single and double front mounting C5 5 single front mounting C6 5 single and double front mounting C7 4 single front mounting C8 4 single and double front mounting C11 3 single front mounting SF1 3 single front mounting SR1 3 single rear mounting
Device presentation	Basic element

Environment

Protective treatment	TH
Ambient Air Temperature for Storage	-40…158 °F (-40…70 °C)
Ambient Air Temperature for Operation	-40…158 °F (-40…70 °C)

Price is “List Price” and may be subject to a trade discount – check with your local distributor or retailer for actual price.

Disclaimer: This documentation is not intended as a substitute for and is not to be used for determining suitability or reliability of these products for specific user applications

Overvoltage category	Class II conforming to IEC 60536
IP degree of protection	IP67 IEC 60529
Enclosure Type	UL type 4X/13
Resistance to high pressure washer	1015.3 psi (7000000 Pa) 131 °F (55 °C) 0.1 m
IK degree of protection	IK06 conforming to IEC 50102
Standards	IEC 60947-1 IEC 60947-5-4 IEC 60947-5-1 UL 508 JIS C8201-5-1 CSA C22.2 No 14 JIS C8201-1
Product Certifications	DNV CSA BV LROS (Lloyds register of shipping) UL Listed
Vibration resistance	5 gn (f= 2…500 Hz) conforming to IEC 60068-2-6
Shock resistance	30 gn 18 ms) half sine wave acceleration IEC 60068-2-27 50 gn 11 ms) half sine wave acceleration IEC 60068-2-27

Ordering and shipping details

Category	US10CS222467
Discount Schedule	0CS2
GTIN	3606489763787
Returnability	Yes
Country of origin	FR

Packing Units

Unit Type of Package 1	PCE
Nbr. of units in pkg.	1
Package 1 Height	1.7 in (4.2 cm)
Package 1 Width	1.3 in (3.3 cm)
Package 1 Length	2.05 in (5.2 cm)
Package weight(Lbs)	0.8 oz (24.0 g)

Contractual warranty

Warranty (in months)	18

Environmental Data

Schneider Electric aims to achieve Net Zero status by 2050 through supply chain partnerships, lower impact materials, and circularity via our ongoing “Use Better, Use Longer, Use Again” campaign to extend product lifetimes and recyclability.

Environmental Data explained

How we assess product sustainability

Environmental footprint

Environmental Disclosure	Product Environmental Profile

Use Better

Materials and Substances

Packaging made with recycled cardboard	No
Packaging without single use plastic	No
EU RoHS Directive	Compliant
REACh Regulation	Free of Substances of Very High Concern above the threshold
California proposition 65	WARNING: This product can expose you to chemicals including: Di-isodecyl phthalate (DIDP), which is known to the State of California to cause birth defects or other reproductive harm. For more information go to www.P65Warnings.ca.gov

Use Longer

Lifetime extension

Repair	No

Use Again

Repack and remanufacture

Circularity Profile	End of Life Information
Take-back	No

Dimensions Drawings

Dimensions

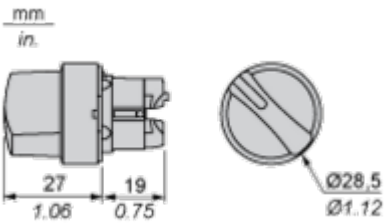

Mounting and Clearance

Panel Cut-out for Pushbuttons, Switches and Pilot Lights (Finished Holes, Ready for Installation)

Connection by Screw Clamp Terminals or Plug-in Connectors or on Printed Circuit Board

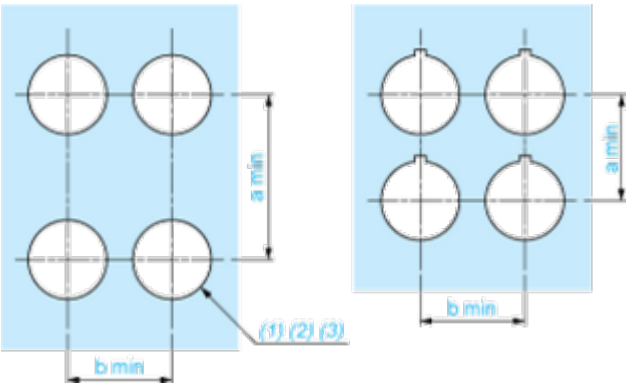

(1) Diameter on finished panel or support
(2) For selector switches and Emergency stop buttons, use of an anti-rotation plate type ZB5AZ902 is recommended.
(3) Ø22.5 mm recommended (Ø22.3 $_{0}^{+0.4}$) / Ø0.89 in. recommended (Ø0.88 in. $_{0}^{+0.016}$)

Connections	a in mm	a in in.	b in mm	b in in.
By screw clamp terminals or plug-in connector	40	1.57	30	1.18
By Faston connectors	45	1.77	32	1.26
On printed circuit board	30	1.18	30	1.18

Detail of Lug Recess

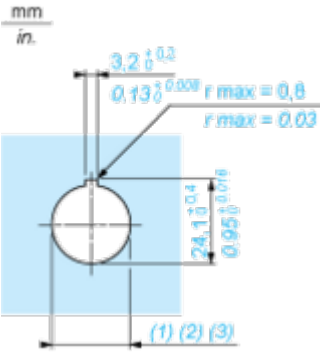

(1) Diameter on finished panel or support
(2) For selector switches and Emergency stop buttons, use of an anti-rotation plate type ZB5AZ902 is recommended.
(3) Ø22.5 mm recommended (Ø22.3 $_{0}^{+0.4}$) / Ø0.89 in. recommended (Ø0.88 in. $_{0}^{+0.016}$)

Pushbuttons, Switches and Pilot Lights for Printed Circuit Board Connection

Panel Cut-outs (Viewed from Installer's Side)

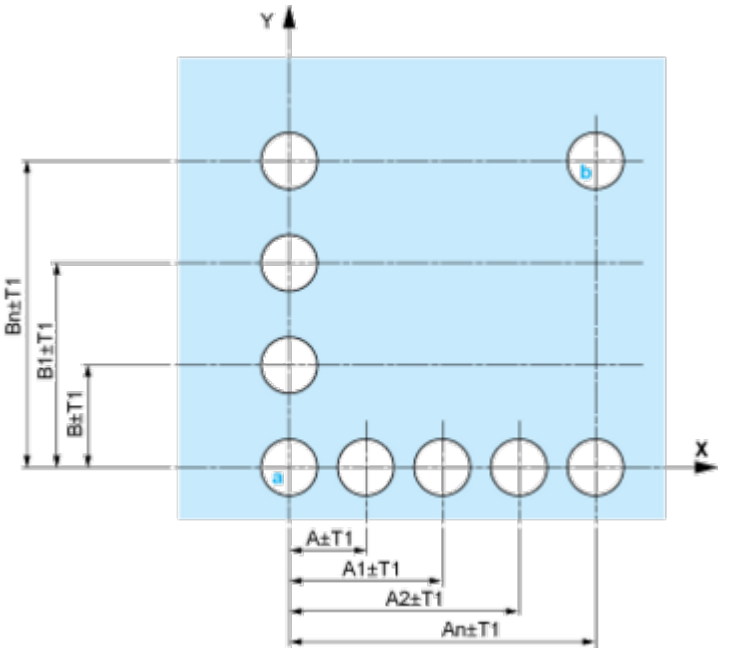

A: 30 mm min. / 1.18 in. min.
B: 40 mm min. / 1.57 in. min.

Printed Circuit Board Cut-outs (Viewed from Electrical Block Side)

Dimensions in mm

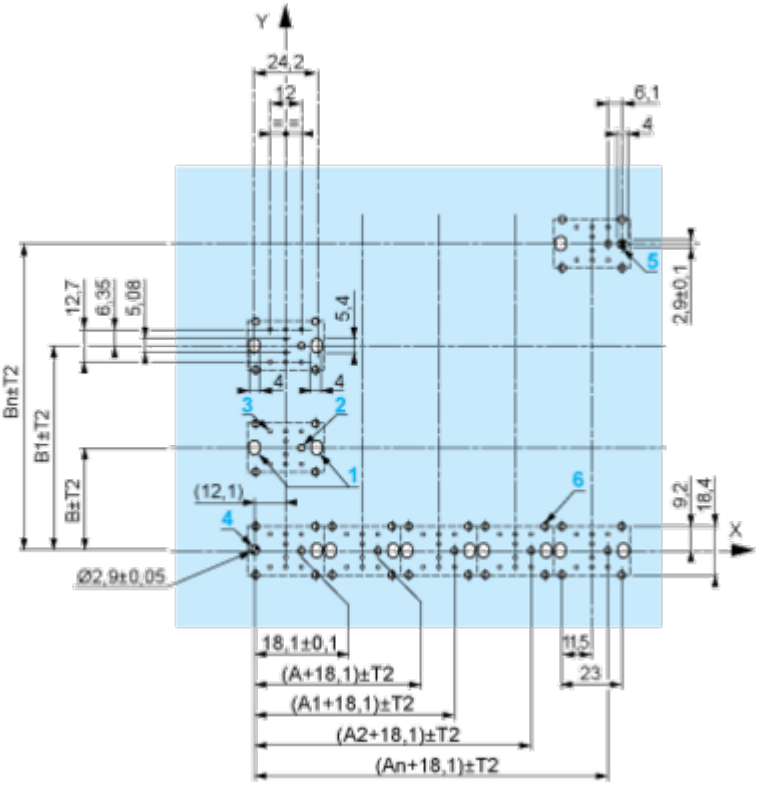

A: 30 mm min.
B: 40 mm min.
Dimensions in in.

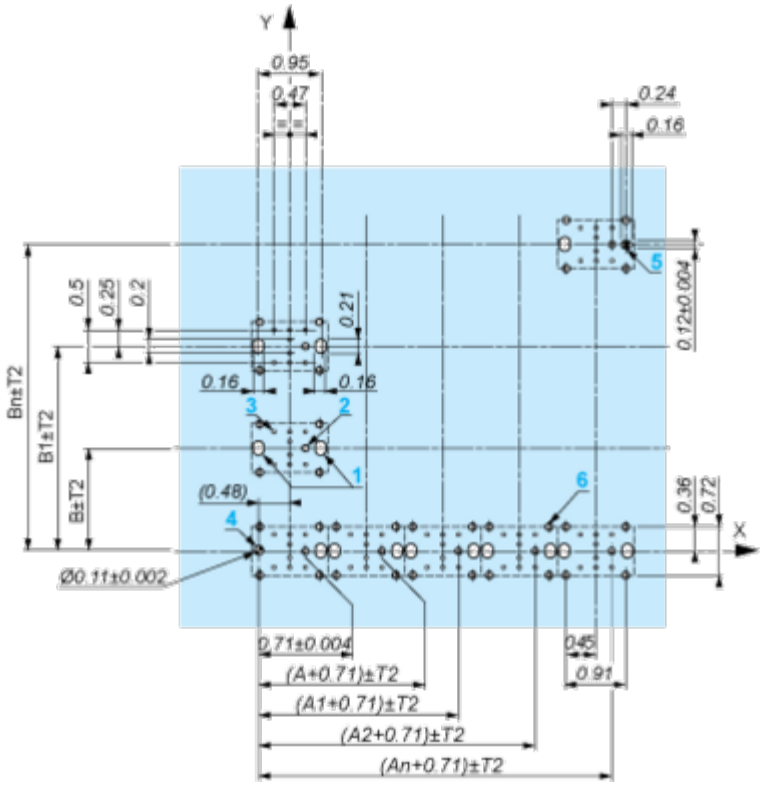

A: 1.18 in. min.
B: 1.57 in. min.

General Tolerances of the Panel and Printed Circuit Board

The cumulative tolerance must not exceed 0.3 mm / 0.012 in.: T1 + T2 = 0.3 mm max.

Installation Precautions

- Minimum thickness of circuit board: 1.6 mm / 0.06 in.
- Cut-out diameter: 22.4 mm ± 0.1 / 0.88 in. ± 0.004
- Orientation of body/fixing collar ZB5AZ009: ± 2°30' (excluding cut-outs marked **a** and **b**).
- Tightening torque of screws ZBZ006: 0.6 N.m (5.3 lbf.in) max.
- Allow for one ZB5AZ079 fixing collar/pillar and its fixing screws:
  - every 90 mm / 3.54 in. horizontally (X), and 120 mm / 4.72 in. vertically (Y).
  - with each selector switch head (ZB5AD•, ZB5AJ•, ZB5AG•).

The fixing centers marked **a** and **b** are diagonally opposed and must align with those marked **4** and **5**.

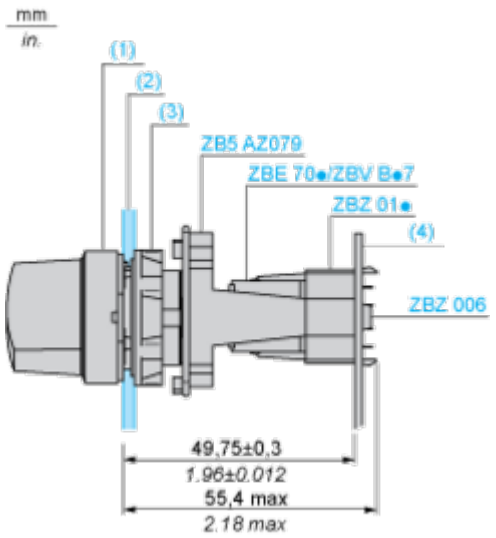

(1) Head ZB5AD•
(2) Panel
(2) Nut
(4) Printed circuit board

Mounting of Adapter (Socket) ZBZ01•

- **1** 2 elongated holes for ZBZ006 screw access
- **2** 1 hole Ø 2.4 mm ± 0.05 / 0.09 in. ± 0.002 for centring adapter ZBZ01•
- **3** 8 × Ø 1.2 mm / 0.05 in. holes
- **4** 1 hole Ø 2.9 mm ± 0.05 / 0.11 in. ± 0.002, for aligning the printed circuit board (with cut-out marked **a**)
- **5** 1 elongated hole for aligning the printed circuit board (with cut-out marked **b**)
- **6** 4 holes Ø 2.4 mm / 0.09 in. for clipping in adapter ZBZ01•

Dimensions An + 18.1 relate to the Ø 2.4 mm ± 0.05 / 0.09 in. ± 0.002 holes for centring adapter ZBZ01•.

Technical Description

Electrical Composition Corresponding to Code C3

Electrical Composition Corresponding to Code C4

Electrical Composition Corresponding to Code C5

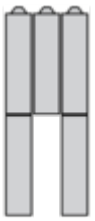

Electrical Composition Corresponding to Code C6

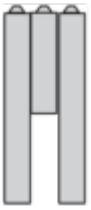

Electrical Composition Corresponding to Code C7

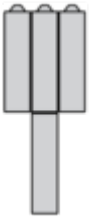

Electrical Composition Corresponding to Code C8

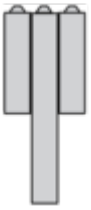

Electrical Composition Corresponding to Codes C9, C11, SF1 and SR1

Electrical Composition Corresponding to Code C15

1 N/O

1 N/C

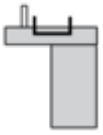

1 N/O + N/C or 1 N/O + N/O or 1 N/C + N/C

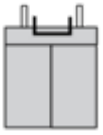

Legend

Single contact

Double contact

Light block

Possible location

Sequence of Contacts Fitted to 3-position Selector Switch Body

Position 315°

Push	Position	Top			
		Bottom			
	Location		Left	Centre	Right
	State		1	1	0
Contacts	N/O		closed	closed	open
	N/C		open	open	closed

Position 0°

Push	Position	Top			
		Bottom			
	Location		Left	Centre	Right
	State		0	0	0
Contacts	N/O		open	open	open
	N/C		closed	closed	closed

Position 45°

Push	Position	Top			
		Bottom			
	Location		Left	Centre	Right
	State		0	1	1
Contacts	N/O		open	closed	closed
	N/C		closed	open	open

Technical Illustration

Dimensions

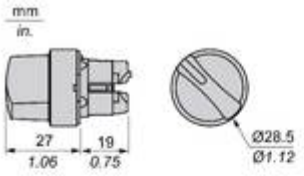

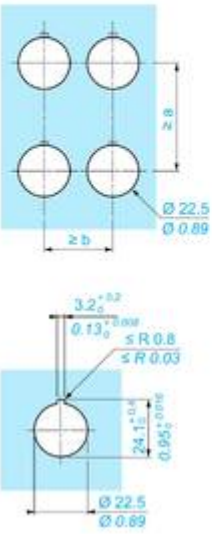

		a (mm)	a (in.)	b (mm)	b (in.)
ZBE●●●●●	ZBV●●●●	40	1.57	30	1.18
ZBE●●●●●3	ZBV●●●●3	45	1.77	32	1.26
ZBE●●●●●4	ZBV●●●●4	40	1.57	30	1.18
ZBE●●●●●5	ZBV●●●●5	50	1.97	30	1.18
ZBE●●●●●9	ZBV●●●●9	40	1.57	30	1.18
ZBRT●	ZBRV1	40	1.57	30	1.18

Offer Marketing Illustration

Product benefits / Features

Offer Marketing Illustration

Product benefits / Features

Image of product / Alternate images
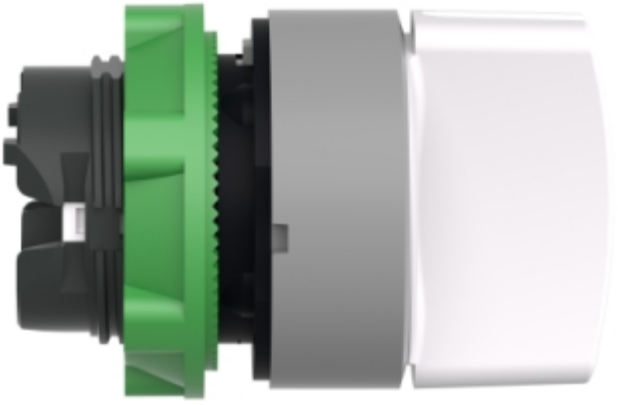
Alternative