# Product data sheet

Specifications

## Head for pilot light, Harmony XB4, metal, white, 22mm, universal LED, plain lens

ZB4BV013

**Product availability: Stock - Normally stocked in distribution facility**
**Important message: A change in appearance may be noted on the product but does not affect its use in terms of function and safety. This makes it compatible with our Universal LED blocks**

## Main

| | |
|---|---|
| **Range of Product** | Harmony XB4 |
| **Product or Component Type** | Head for pilot light |
| **Product Compatibility** | Universal LED |
| **Device short name** | ZB4 |
| **Bezel material** | Chromium plated metal |
| **Mounting diameter** | 0.9 in (22 mm) |
| **Sale per indivisible quantity** | 1 |
| **Head type** | Standard |
| **Shape of signaling unit head** | Round |
| **Cap/operator or lens colour** | White |
| **Operator additional information** | With plain lens |

## Complementary

| | |
|---|---|
| **CAD overall width** | 1.1 in (29 mm) |
| **CAD overall height** | 1.1 in (29 mm) |
| **CAD overall depth** | 1.2 in (30 mm) |
| **Product Weight** | 0.057 lb(US) (0.026 kg) |
| **Resistance to high pressure washer** | 1015.3 psi (7000000 Pa) 131 °F (55 °C) 0.1 m |
| **Electrical composition code** | P1 front mounting integral LED<br>P2 front mounting integral LED and transformer |
| **Device presentation** | Basic element |

## Environment

| | |
|---|---|
| **Protective treatment** | TH |
| **Ambient Air Temperature for Storage** | -40…158 °F (-40…70 °C) |
| **Ambient Air Temperature for Operation** | -40…158 °F (-40…70 °C) |
| **Overvoltage category** | Class I conforming to IEC 60536 |
| **IP degree of protection** | IP66 IEC 60529<br>IP67<br>IP69<br>IP69K |

Price is “List Price” and may be subject to a trade discount – check with your local distributor or retailer for actual price.

Disclaimer: This documentation is not intended as a substitute for and is not to be used for determining suitability or reliability of these products for specific user applications

| | |
|---|---|
| **Enclosure Type** | UL type 4X/13 |
| **IK degree of protection** | IK06 conforming to IEC 50102 |
| **Standards** | IEC 60947-5-4<br>IEC 60947-5-5<br>IEC 60947-5-1<br>UL 508<br>CSA C22.2 No 14<br>IEC 60947-1<br>JIS C8201-5-1<br>JIS C8201-1 |
| **Vibration resistance** | 5 gn (f= 2…500 Hz) conforming to IEC 60068-2-6 |
| **Shock resistance** | 30 gn 18 ms) half sine wave acceleration IEC 60068-2-27<br>50 gn 11 ms) half sine wave acceleration IEC 60068-2-27 |

## Ordering and shipping details

| | |
|---|---|
| **Category** | US10CS222468 |
| **Discount Schedule** | 0CS2 |
| **GTIN** | 3389110123234 |
| **Returnability** | Yes |
| **Country of origin** | FR |

## Packing Units

| | |
|---|---|
| **Unit Type of Package 1** | PCE |
| **Nbr. of units in pkg.** | 1 |
| **Package 1 Height** | 1.732 in (4.400 cm) |
| **Package 1 Width** | 1.339 in (3.400 cm) |
| **Package 1 Length** | 2.126 in (5.400 cm) |
| **Package weight(Lbs)** | 0.988 oz (28.000 g) |
| **Unit Type of Package 2** | S03 |
| **Number of Units in Package 2** | 300 |
| **Package 2 Height** | 11.811 in (30.000 cm) |
| **Package 2 Width** | 11.811 in (30.000 cm) |
| **Package 2 Length** | 15.748 in (40.000 cm) |
| **Package 2 Weight** | 19.301 lb(US) (8.755 kg) |
| **Unit Type of Package 3** | P06 |
| **Number of Units in Package 3** | 2400 |
| **Package 3 Height** | 29.528 in (75.000 cm) |
| **Package 3 Width** | 23.622 in (60.000 cm) |
| **Package 3 Length** | 31.496 in (80.000 cm) |
| **Package 3 Weight** | 177.349 lb(US) (80.444 kg) |

## Contractual warranty

| | |
|---|---|
| **Warranty (in months)** | 18 |

## Environmental Data

Schneider Electric aims to achieve Net Zero status by 2050 through supply chain partnerships, lower impact materials, and circularity via our ongoing “Use Better, Use Longer, Use Again” campaign to extend product lifetimes and recyclability.

Environmental Data explained

How we assess product sustainability

### Environmental footprint

| | |
|---|---|
| Total lifecycle Carbon footprint | **0.3 kg CO2 eq.** |
| Carbon footprint of the manufacturing phase [A1 to A3] | **0.2 kg CO2 eq.** |
| Carbon footprint of the distribution phase [A4] | **0 kg CO2 eq.** |
| Carbon footprint of the installation phase [A5] | **0 kg CO2 eq.** |
| Carbon footprint of the use phase [B2, B3, B4, B6] | **0 kg CO2 eq.** |
| Carbon footprint of the end-of-life phase [C1 to C4] | **0.1 kg CO2 eq.** |
| Environmental Disclosure | **Product Environmental Profile** |

## Use Better

### Materials and Substances

| | |
|---|---|
| Average percentage of recycled plastic content | **44 %** |
| Average percentage of recycled metal content | **20 %** |
| Packaging made with recycled cardboard | **Yes** |
| Packaging without single use plastic | **Yes** |
| EU RoHS Directive | **Compliant** |
| REACh Regulation | **Free of Substances of Very High Concern above the threshold** |
| California proposition 65 | **WARNING: This product can expose you to chemicals including: Lead and lead compounds, which is known to the State of California to cause cancer and birth defects or other reproductive harm. For more information go to www.P65Warnings.ca.gov** |

## Use Longer

### Lifetime extension

| | |
|---|---|
| Repair | **No** |

## Use Again

### Repack and remanufacture

| | |
|---|---|
| Circularity Profile | **End of Life Information** |
| Take-back | **No** |

Dimensions Drawings

**Dimensions**

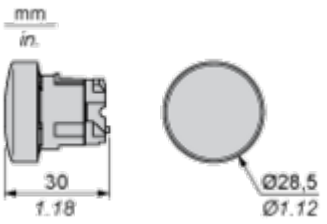

## Mounting and Clearance

### Panel Cut-out for Pushbuttons, Switches and Pilot Lights (Finished Holes, Ready for Installation)

| Connection by Screw Clamp Terminals or Plug-in Connectors or on Printed Circuit Board | Connection by Faston Connectors |
|---|---|
| 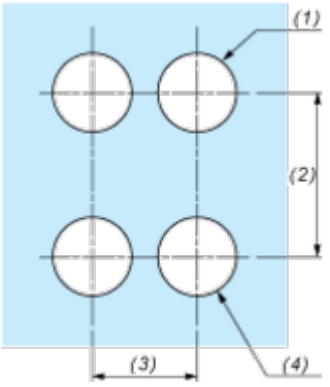  | 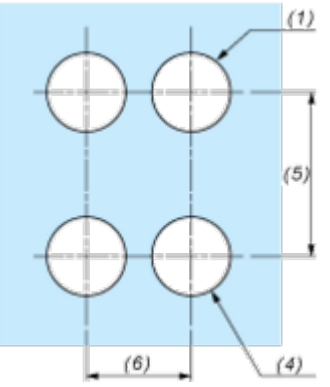  |

**(1)** Diameter on finished panel or support
**(2)** 40 mm min. / 1.57 in. min.
**(3)** 30 mm min. / 1.18 in. min.
**(4)** Ø 22.5 mm / 0.89 in. recommended (Ø 22.3 mm $_{0}^{+0.4}$ / 0.88 in. $_{0}^{+0.016}$)
**(5)** 45 mm min. / 1.78 in. min.
**(6)** 32 mm min. / 1.26 in. min.

## Pushbuttons, Switches and Pilot Lights for Printed Circuit Board Connection

### Panel Cut-outs (Viewed from Installer's Side)

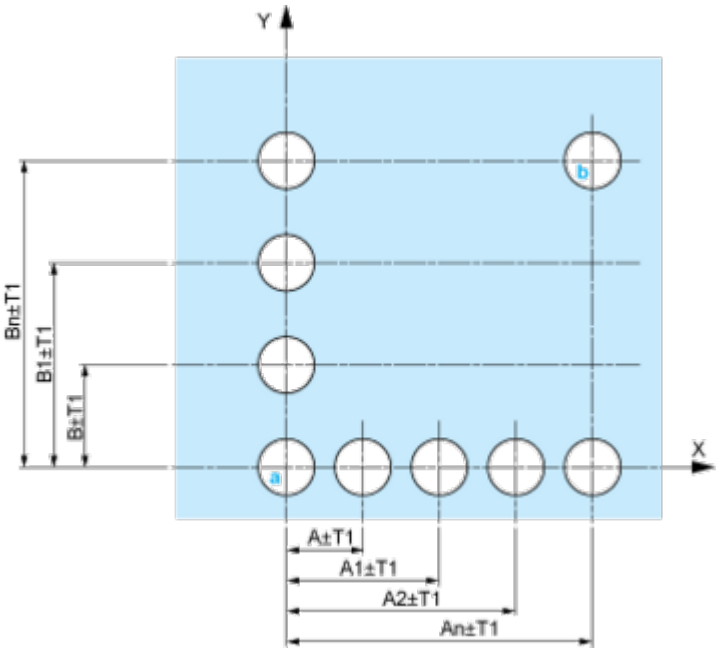


**A:** 30 mm min. / 1.18 in. min.
**B:** 40 mm min. / 1.57 in. min.

### Printed Circuit Board Cut-outs (Viewed from Electrical Block Side)

Dimensions in mm

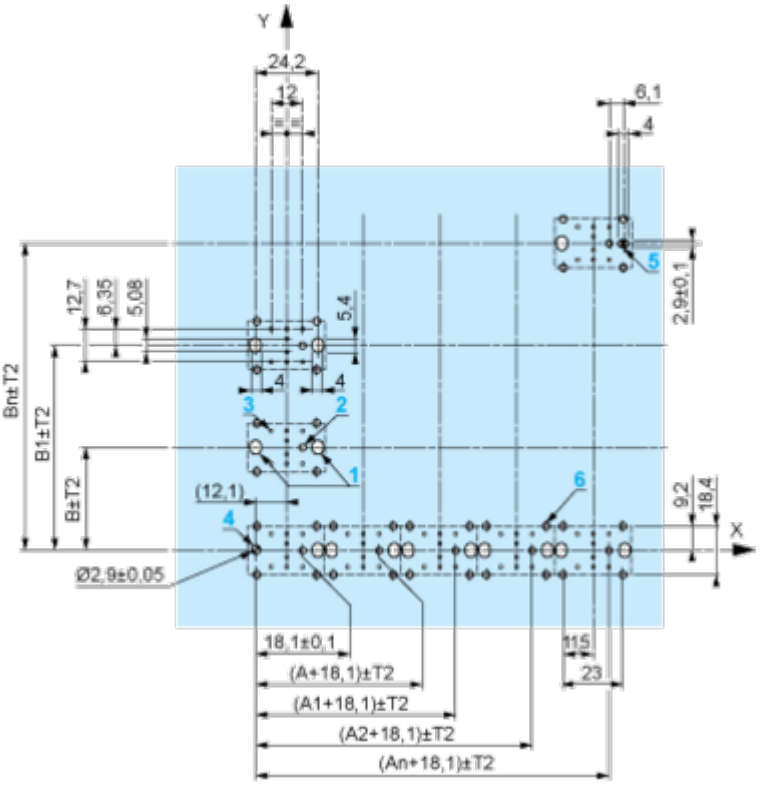


**A:** 30 mm min.
**B:** 40 mm min.
Dimensions in in.

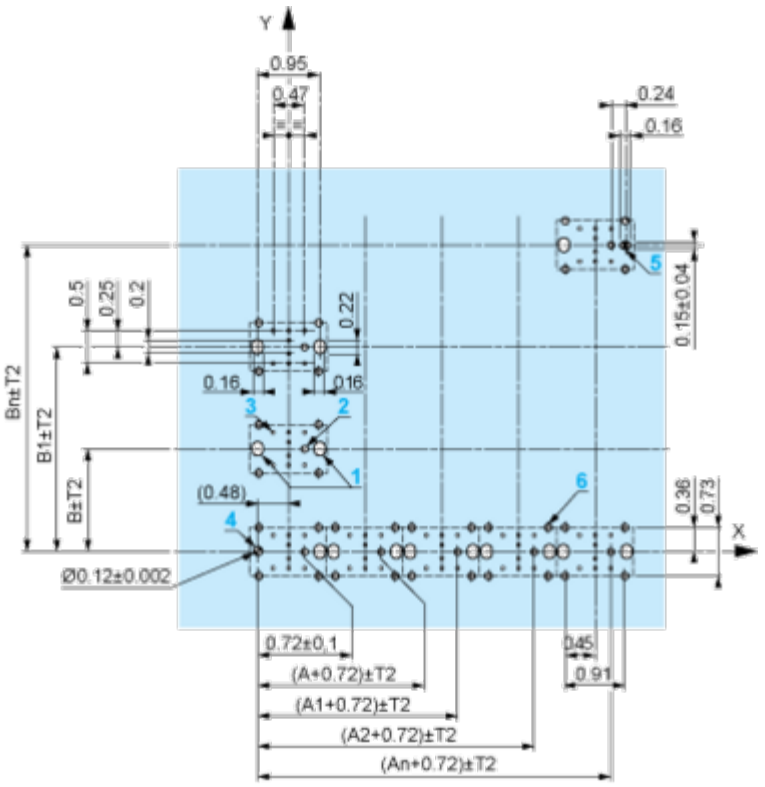


**A:** 1.18 in. min.
**B:** 1.57 in. min.

### General Tolerances of the Panel and Printed Circuit Board

The cumulative tolerance must not exceed 0.3 mm / 0.012 in: T1 + T2 = 0.3 mm max.

### Installation Precautions

- Minimum thickness of circuit board: 1.6 mm / 0.06 in.
- Cut-out diameter: 22.4 mm ± 0.1 / 0.88 in. ± 0.004
- Orientation of body/fixing collar ZB4 BZ009: ± 2°30' (excluding cut-outs marked **a** and **b**).
- Tightening torque of screws ZBZ 006: 0.6 N.m (5.3 lbf.in) max.
- Allow for one ZB4 BZ079 fixing collar/pillar and its fixing screws:
  - every 90 mm / 3.54 in. horizontally (X), and 120 mm / 4.72 in. vertically (Y).
  - with each selector switch head (ZB4 BD•, ZB4 BJ•, ZB4 BG•).

The fixing centers marked **a** and **b** are diagonally opposed and must align with those marked **4** and **5**.

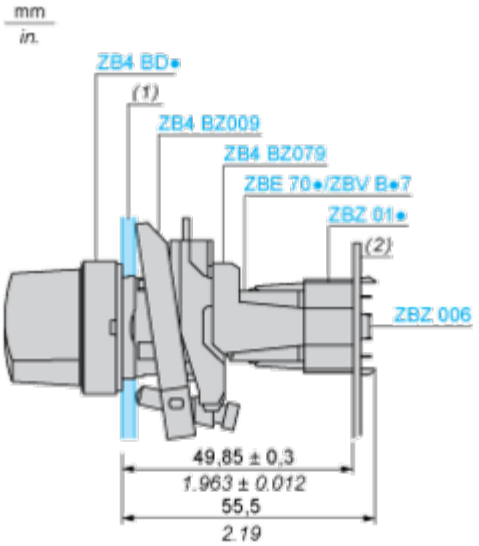


**(1)** Panel
**(2)** Printed circuit board

### Mounting of Adapter (Socket) ZBZ 01•

- **1** 2 elongated holes for ZBZ 006 screw access
- **2** 1 hole Ø 2.4 mm ± 0.05 / 0.09 in. ± 0.002 for centring adapter ZBZ 01•
- **3** 8 × Ø 1.2 mm / 0.05 in. holes
- **4** 1 hole Ø 2.9 mm ± 0.05 / 0.11 in. ± 0.002, for aligning the printed circuit board (with cut-out marked **a**)
- **5** 1 elongated hole for aligning the printed circuit board (with cut-out marked **b**)
- **6** 4 holes Ø 2.4 mm / 0.09 in. for clipping in adapter ZBZ 01•

Dimensions An + 18.1 relate to the Ø 2.4 mm ± 0.05 / 0.09 in. ± 0.002 holes for centring adapter ZBZ 01•.

Technical Description

## Electrical Composition Corresponding to Codes P1, P3, PF1, PR1 and PF2

Light block

## Electrical Composition Corresponding to Codes M6 and P2

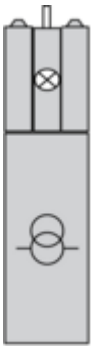

## Legend

Single contact

Double contact

Light block

Possible location

Technical Illustration

**Dimensions**

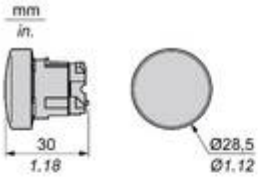


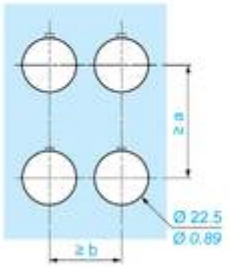


| | | a (mm) | a (in.) | b (mm) | b (in.) |
|---|---|---|---|---|---|
| ZBE●●●●● | ZBV●●●● | 40 | 1.57 | 30 | 1.18 |
| ZBE●●●●●3 | ZBV●●●●3 | 45 | 1.77 | 32 | 1.26 |
| ZBE●●●●●4 | ZBV●●●●4 | 40 | 1.57 | 30 | 1.18 |
| ZBE●●●●●5 | ZBV●●●●5 | 50 | 1.97 | 30 | 1.18 |
| ZBE●●●●●9 | ZBV●●●●9 | 40 | 1.57 | 30 | 1.18 |
| ZBRT● | ZBRV1 | 40 | 1.57 | 30 | 1.18 |

Offer Marketing Illustration

**Product benefits / Features**

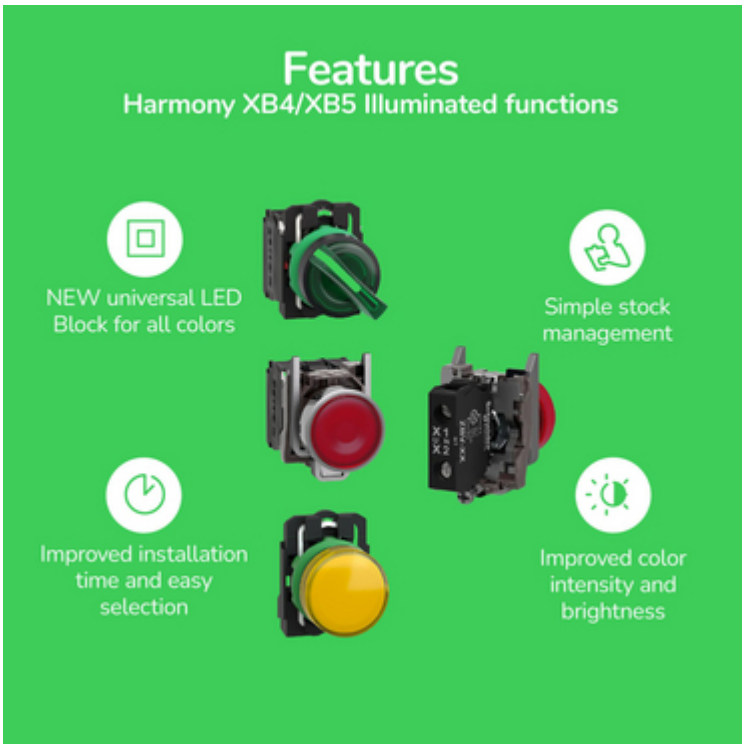

Offer Marketing Illustration

**Product benefits / Features**

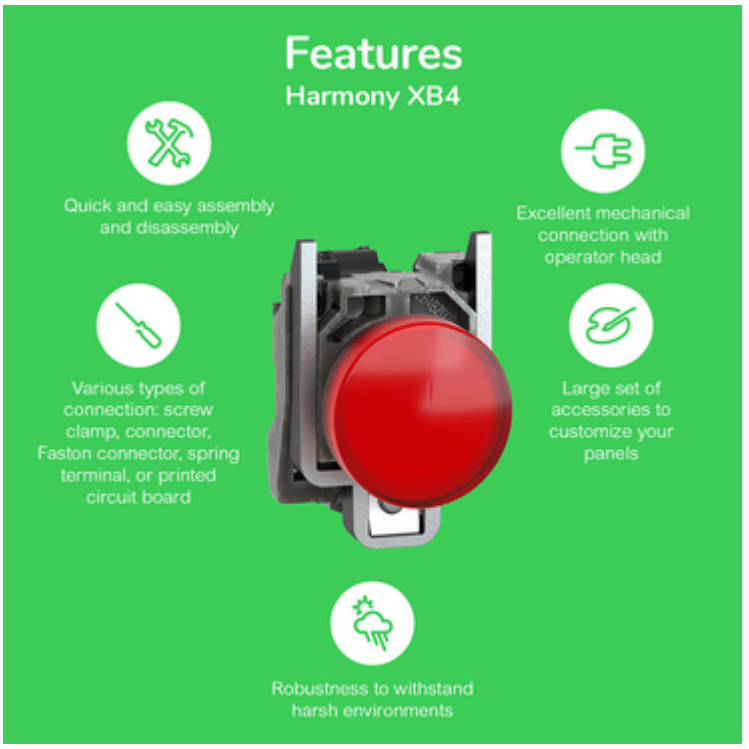

Offer Marketing Illustration

**Product benefits / Features**

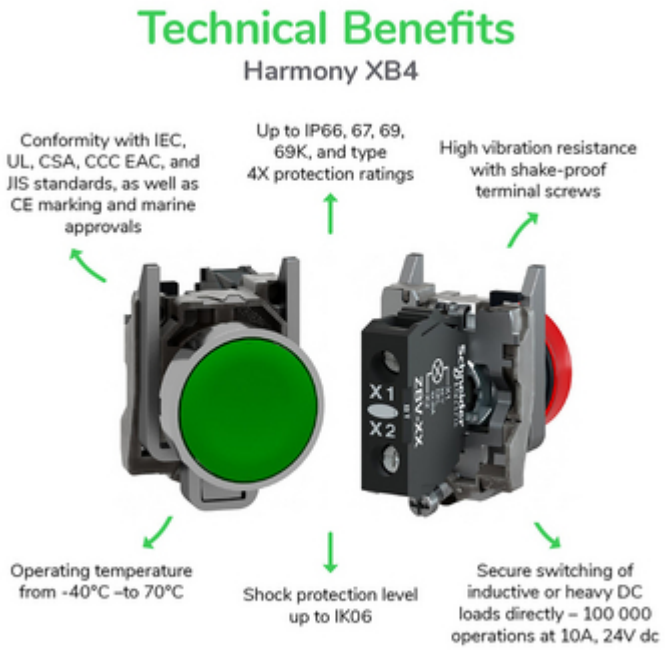

Image of product / Alternate images

**Alternative**