Product data sheet

Specifications

Hand-held remote control, Harmony Pocket Remote, 6 single-step push buttons

ZART06

Product availability: Non-Stock - Not normally stocked in distribution facility

Main

Range of Product	Harmony Pocket Remote
Product or Component Type	Hand-held remote control
Device short name	ZART
Control Button Type	6 single step push-button

Complementary

Material	Push-button cover silicone rubber Enclosure ABS + PET
Function Available	Power switch
Display type	1 LED
Operating Distance	50 m
Communication network type	Wireless
Transmission frequency	2.4 GHz
Maximum sensing distance	984.3 ft (300 m) in free field
Response time	< 500 ms
Autonomy	> 100 h with alkaline batteries
Battery type	2 AAA/LR3 alkaline
Width	2.6 in (66 mm)
Height	4.5 in (114 mm)
Depth	1.5 in (37.5 mm)
Product Weight	0.298 lb(US) (0.135 kg)

Environment

Radio agreement	IC FCC
IP degree of protection	IP67
Ambient Air Temperature for Operation	-4…131 °F (-20…55 °C)
Ambient Air Temperature for Storage	-4…113 °F (-20…45 °C)
Operating altitude	0...6561.68 ft (0...2000 m)
Storage altitude	0…9842.5 ft (0…3000 m)
Relative humidity	0…95 % -4…140 °F (-20…60 °C) operating
Product Certifications	CE

Price is “List Price” and may be subject to a trade discount – check with your local distributor or retailer for actual price.

Disclaimer: This documentation is not intended as a substitute for and is not to be used for determining suitability or reliability of these products for specific user applications

Ordering and shipping details

Category	US10CS222467
Discount Schedule	0CS2
GTIN	3606481499479
Returnability	Yes
Country of origin	CN

Packing Units

Unit Type of Package 1	PCE
Nbr. of units in pkg.	1
Package 1 Height	1.772 in (4.500 cm)
Package 1 Width	2.953 in (7.500 cm)
Package 1 Length	5.315 in (13.500 cm)
Package weight(Lbs)	6.314 oz (179.000 g)
Unit Type of Package 2	S01
Number of Units in Package 2	8
Package 2 Height	5.906 in (15.000 cm)
Package 2 Width	5.906 in (15.000 cm)
Package 2 Length	15.748 in (40.000 cm)
Package 2 Weight	3.605 lb(US) (1.635 kg)

Contractual warranty

Warranty (in months)	18

Environmental Data

Schneider Electric aims to achieve Net Zero status by 2050 through supply chain partnerships, lower impact materials, and circularity via our ongoing “Use Better, Use Longer, Use Again” campaign to extend product lifetimes and recyclability.

Environmental Data explained

How we assess product sustainability

Environmental footprint

Total lifecycle Carbon footprint	**6 kg CO2 eq.**
Carbon footprint of the manufacturing phase [A1 to A3]	**6 kg CO2 eq.**
Carbon footprint of the distribution phase [A4]	**0 kg CO2 eq.**
Carbon footprint of the installation phase [A5]	**0 kg CO2 eq.**
Carbon footprint of the use phase [B2, B3, B4, B6]	**0 kg CO2 eq.**
Carbon footprint of the end-of-life phase [C1 to C4]	**0.1 kg CO2 eq.**
Environmental Disclosure	**Product Environmental Profile**

Use Better

Materials and Substances

Packaging made with recycled cardboard	**No**
Packaging without single use plastic	**No**
SCIP Number	**6e438e59-42d1-4633-bfe2-cb5ef607659b**
EU RoHS Directive	**Compliant By Exemption**
REACh Regulation	**Reference contains Substances of Very High Concern above the threshold**
California proposition 65	**WARNING: This product can expose you to chemicals including: Nickel compounds, which is known to the State of California to cause cancer, and Di-isodecyl phthalate (DIDP), which is known to the State of California to cause birth defects or other reproductive harm. For more information go to www.P65Warnings.ca.gov**

Use Longer

Lifetime extension

Repair	**No**

Use Again

Repack and remanufacture

Circularity Profile	**End of Life Information**
Take-back	**No**
WEEE Label	**The product must be disposed on European Union markets following specific waste collection and never end up in rubbish bins.**

Dimensions Drawings

Transmitter Dimensions

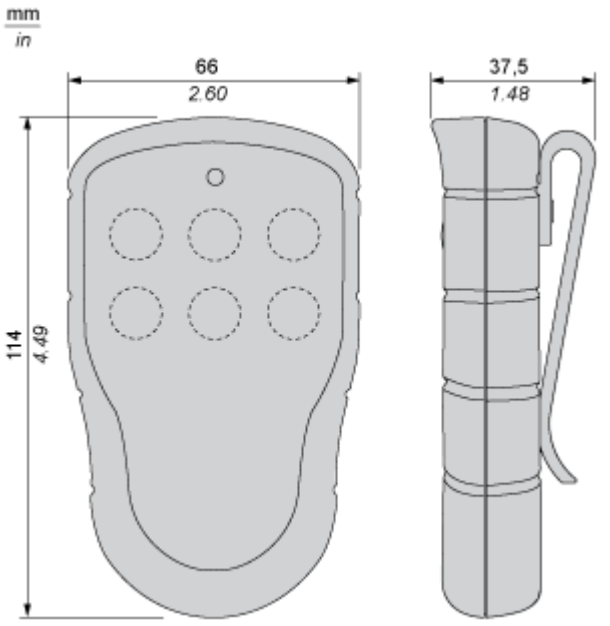

Technical Illustration

Dimensions

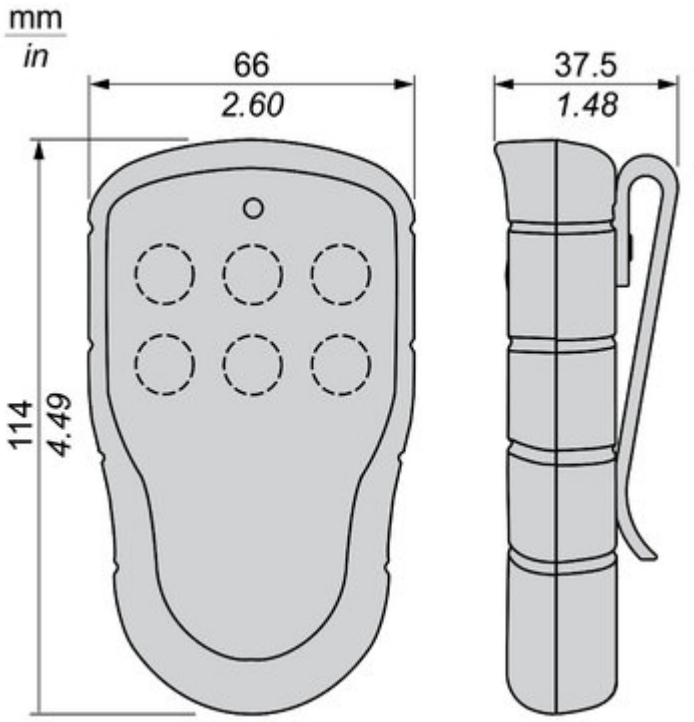

Offer Marketing Illustration

Product benefits / Features

Offer Marketing Illustration

Product benefits / Features