Product data sheet

Specifications

Editable voice alarms, Harmony XVS, black, mounting 72mm DIN rail, NPN, 12...24V DC

XVSV7BBN

Product availability: Stock - Normally stocked in distribution facility

Main

Range of Product	Harmony XVS
Product or Component Type	Editable electronic alarm
Beacon or indicator bank unit type	Sound unit
Device short name	XVSV

Complementary

Color	Dark grey
Input type	Bit 6 channel input Binary 63 channel input
Assembly style	Ready assembled
Material	PC (polycarbonate): body PC (polycarbonate): back cover TPE (thermoplastic elastomer): front panel NBR (nitrile butadiene rubber)
Marking	CE
Overvoltage category	Class II conforming to IEC 61140
Mounting Support	72 mm DIN rail
[Us] rated supply voltage	12...24 V DC
[Ue] rated operational voltage	10...30 V DC
[Ui] Rated Insulation Voltage	250 V
Inrush current	30 A
Associated fuse rating	1 A
[Uimp] rated impulse withstand voltage	2.5 kV IEC 60947-1
Power Consumption in W	1.8 W
Current consumption	75 mA 24 V DC
Clamping Connection Capacity	<= 1 x 1.5 mm²
Device Application	Printing Subway Packaging
Mounting diameter	3.1 in (80 mm)
Width	3.1 in (80 mm)
Height	3.1 in (80 mm)
Depth	1.0 in (24.9 mm)
Product Weight	0.313 lb(US) (0.142 kg)

Price is “List Price” and may be subject to a trade discount – check with your local distributor or retailer for actual price.

Disclaimer: This documentation is not intended as a substitute for and is not to be used for determining suitability or reliability of these products for specific user applications

Environment

Discrete output type	NPN
Signalling type	Adjustable vocal sound
Standards	IEC 60947-5-1
Protective treatment	TC
Ambient Air Temperature for Storage	-4…140 °F (-20…60 °C)
Ambient Air Temperature for Operation	14…131 °F (-10…55 °C)
Pollution degree	2
Relative humidity	35…85 % without condensation
Vibration resistance	7 gn
IP degree of protection	Panel mounted IP65 IEC 60529 Wall mounted IP20
Noise level	0…89 dB stop or suppress)1 m

Ordering and shipping details

Category	US100XV22617
Discount Schedule	00XV
GTIN	3606480623806
Returnability	Yes
Country of origin	ID

Packing Units

Unit Type of Package 1	PCE
Nbr. of units in pkg.	1
Package 1 Height	2.756 in (7.000 cm)
Package 1 Width	4.528 in (11.500 cm)
Package 1 Length	5.157 in (13.100 cm)
Package weight(Lbs)	11.817 oz (335.000 g)
Unit Type of Package 2	S02
Number of Units in Package 2	10
Package 2 Height	5.906 in (15.000 cm)
Package 2 Width	11.811 in (30.000 cm)
Package 2 Length	15.748 in (40.000 cm)
Package 2 Weight	7.807 lb(US) (3.541 kg)

Contractual warranty

Warranty (in months)	18

Environmental Data

Schneider Electric aims to achieve Net Zero status by 2050 through supply chain partnerships, lower impact materials, and circularity via our ongoing “Use Better, Use Longer, Use Again” campaign to extend product lifetimes and recyclability.

Environmental Data explained >

How we assess product sustainability >

Environmental footprint

Total lifecycle Carbon footprint	**5 kg CO2 eq.**
Carbon footprint of the manufacturing phase [A1 to A3]	**3 kg CO2 eq.**
Carbon footprint of the distribution phase [A4]	**0 kg CO2 eq.**
Carbon footprint of the installation phase [A5]	**0 kg CO2 eq.**
Carbon footprint of the use phase [B2, B3, B4, B6]	**2 kg CO2 eq.**
Carbon footprint of the end-of-life phase [C1 to C4]	**0.1 kg CO2 eq.**
Environmental Disclosure	**Product Environmental Profile**

Use Better

Materials and Substances

Packaging made with recycled cardboard	**Yes**
Packaging without single use plastic	**Yes**
SCIP Number	**Fe0ee3ab-dd49-4abe-bd8e-c49754e2c442**
EU RoHS Directive	**Compliant By Exemption**
REACh Regulation	**Reference contains Substances of Very High Concern above the threshold**
California proposition 65	**WARNING: This product can expose you to chemicals including: Lead and lead compounds, which is known to the State of California to cause cancer and birth defects or other reproductive harm. For more information go to www.P65Warnings.ca.gov**

Use Longer

Lifetime extension

Repair	**No**

Use Again

Repack and remanufacture

Circularity Profile	**End of Life Information**
Take-back	**No**

Dimensions Drawings

Dimensions

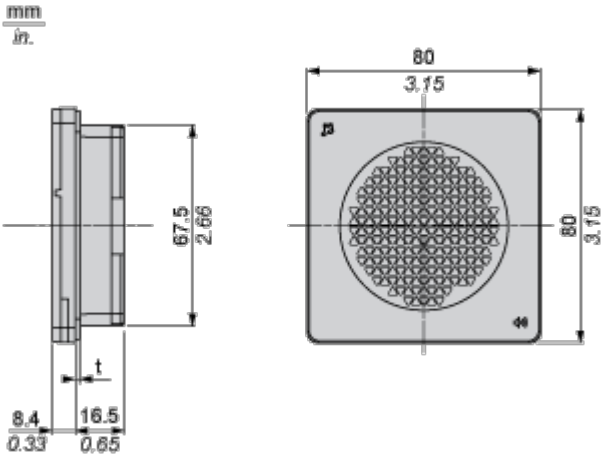

(t) : Waterproof rubber (1.6 mm / 0.06 in.)

Mounting and Clearance

Panel Cut Dimensions

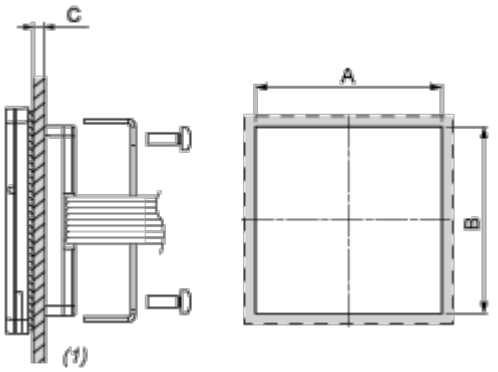

(1) Installation panel

A	B	C
68 +0.5/0 mm (2.68 +0.0197/0 in.)	68 +0.5/0 mm (2.68 +0.0197/0 in.)	1...4 mm (0.04...0.15 in.)

Wall Mount Dimensions

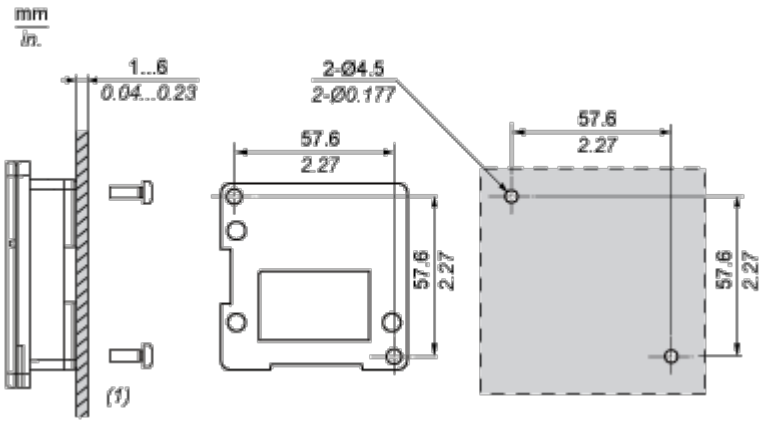

(1) Installation panel

Connections and Schema

Wiring Diagram

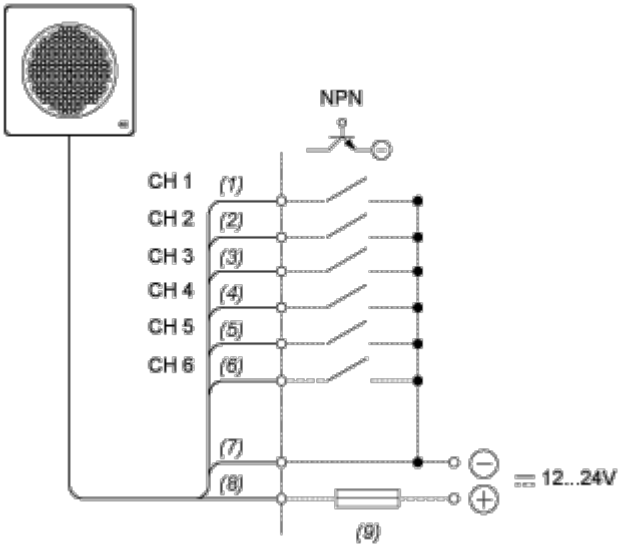

(1) Green

(2) Yellow

(3) Brown

(4) Blue

(5) Purple

(6) Gray

(7) Black

(8) Red

(9) Fuse (Rated current:1 A)

Technical Illustration

Dimensions

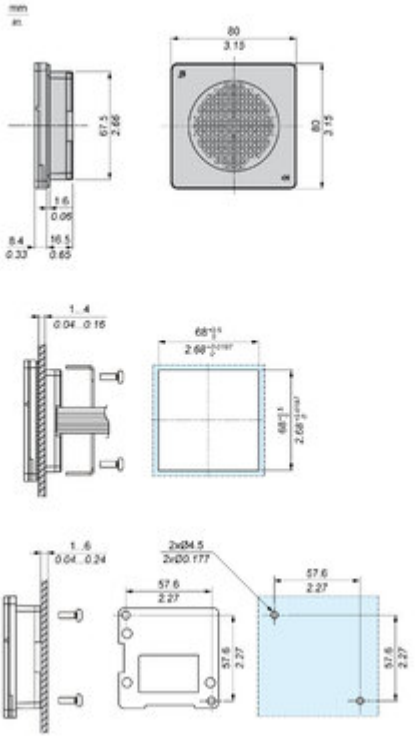

Technical Illustration

Wiring diagram

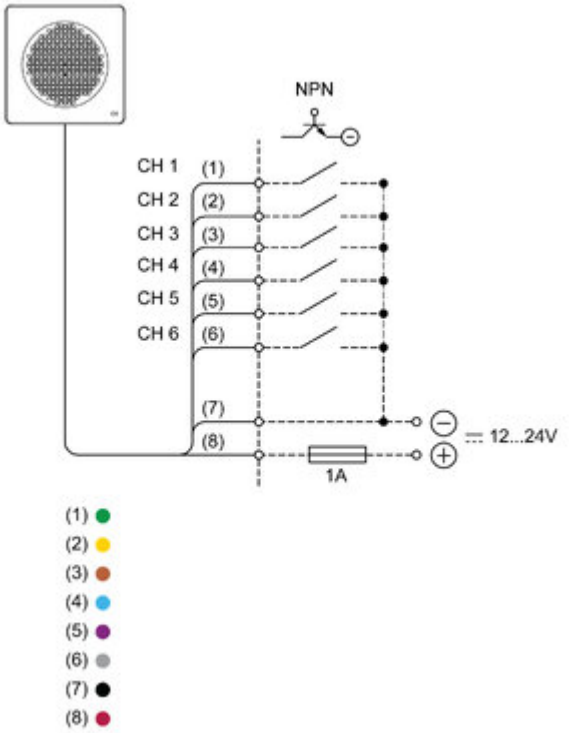

Offer Marketing Illustration

Product benefits / Features

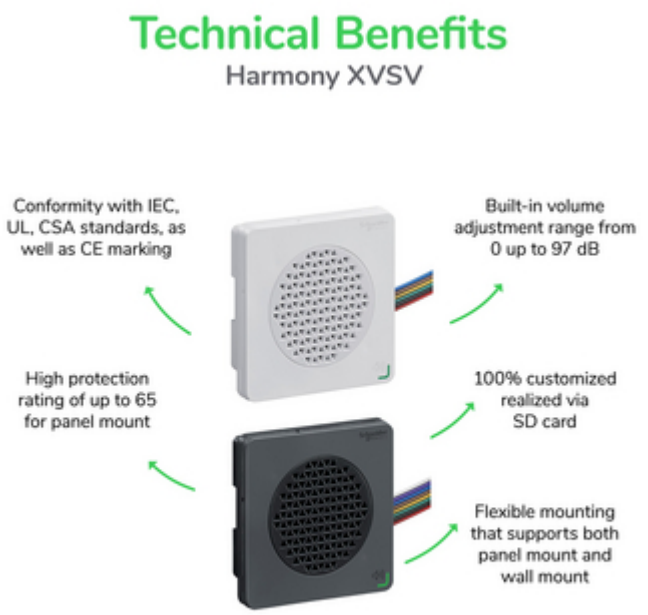

Offer Marketing Illustration

Product benefits / Features

Image of product / Alternate images

Alternative

Image of product in real life situation