Product data sheet

Specifications

Complete pre wired monolithic tower light, Harmony XVC, plastic, red orange green, 100mm, base mounting, steady or flashing, IP54, 100...240V AC

XVC1M3K

To be discontinued

Discontinued on: Feb 27, 2026

To be end-of-service on: Dec 31, 2026

Product availability: Non-Stock - Not normally stocked in distribution facility

Main

Range of Product	Harmony XVC1
Product or Component Type	Complete pre-wired monolithic tower light
Beacon or indicator bank unit type	3 illuminated units
Sound signalling	Without
Mounting diameter	3.9 in (100 mm)
Component name	XVC
Light source	LED steady or flashing red LED steady or flashing orange LED steady or flashing green
[Us] rated supply voltage	100...240 V
Supply circuit type	AC

Complementary

Material	Polycarbonate: illuminated unit ABS (acrylonitrile butadiene-styrene): base unit PBT + ABS (UL94-V0): top cover
Product mounting	On base
Cable cross section	0.0005 in² (0.33 mm²) 0.001 in² (0.83 mm²)
AWG Gauge	22 AWG 18 AWG
Cable length	19.7 in (500 mm)
Marking	CE
[Uimp] rated impulse withstand voltage	4 kV
Current Consumption	160 mA
Flashing frequency	0.7…3 Hz
Product Weight	3.09 lb(US) (1.4 kg)
Height	14.6 in (372 mm)

Environment

Price is “List Price” and may be subject to a trade discount – check with your local distributor or retailer for actual price.

Disclaimer: This documentation is not intended as a substitute for and is not to be used for determining suitability or reliability of these products for specific user applications

Standards	IEC 60947-5-1 IEC 60947-1
Product Certifications	UL
Protective treatment	TC
Ambient Air Temperature for Storage	-31…158 °F (-35…70 °C)
Ambient Air Temperature for Operation	-22…122 °F (-30…50 °C)
Electrical shock protection class	Class I conforming to IEC 61140
IP degree of protection	IP54 IEC 60529

Ordering and shipping details

Category	US100XV22617
Discount Schedule	00XV
GTIN	3606480072314
Returnability	Yes
Country of origin	ID

Packing Units

Unit Type of Package 1	PCE
Nbr. of units in pkg.	1
Package 1 Height	8.5 in (21.5 cm)
Package 1 Width	8.07 in (20.5 cm)
Package 1 Length	17.5 in (44.5 cm)
Package weight(Lbs)	4.458 lb(US) (2.022 kg)
Unit Type of Package 2	S06
Number of Units in Package 2	6
Package 2 Height	29.5 in (75 cm)
Package 2 Width	23.6 in (60 cm)
Package 2 Length	31.5 in (80 cm)
Package 2 Weight	49.6 lb(US) (22.5 kg)

Contractual warranty

Warranty (in months)	18

Environmental Data

Schneider Electric aims to achieve Net Zero status by 2050 through supply chain partnerships, lower impact materials, and circularity via our ongoing “Use Better, Use Longer, Use Again” campaign to extend product lifetimes and recyclability.

Environmental Data explained

How we assess product sustainability

Environmental footprint

Total lifecycle Carbon footprint	**128 kg CO2 eq.**
Carbon footprint of the manufacturing phase [A1 to A3]	**13 kg CO2 eq.**
Carbon footprint of the distribution phase [A4]	**0.3 kg CO2 eq.**
Carbon footprint of the installation phase [A5]	**2 kg CO2 eq.**
Carbon footprint of the use phase [B2, B3, B4, B6]	**111 kg CO2 eq.**
Carbon footprint of the end-of-life phase [C1 to C4]	**2 kg CO2 eq.**

Use Better

Materials and Substances

Packaging made with recycled cardboard	**Yes**
Packaging without single use plastic	**Yes**
EU RoHS Directive	**Compliant By Exemption**
California proposition 65	**WARNING: This product can expose you to chemicals including: Lead and lead compounds, which is known to the State of California to cause cancer and birth defects or other reproductive harm. For more information go to www.P65Warnings.ca.gov**

Use Longer

Lifetime extension

Repair	**No**

Use Again

Repack and remanufacture

Take-back	**No**

Dimensions Drawings

Pre-assembled and Pre-wired Tower Light

Dimensions

Below drawing shows the maximum configuration of the product. Select the number of stages according to the product characteristics in order to get **b** dimension.

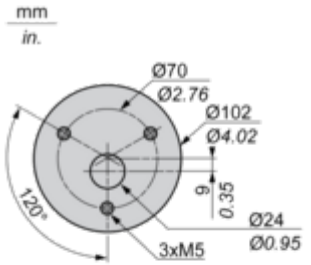

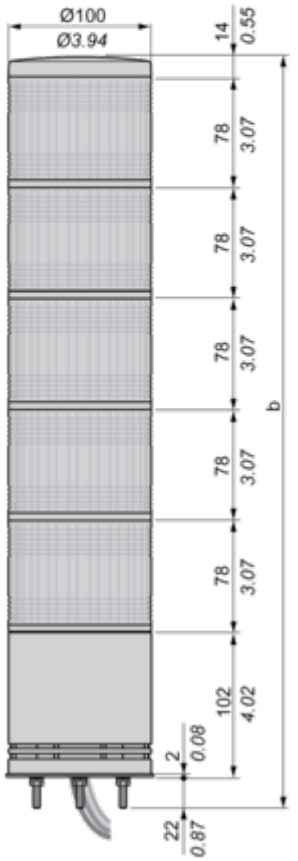

No. of illuminated units	b in mm	b in in.
1	216	8.50
2	294	11.57
3	372	14.65
4	450	17.72
5	528	20.79

Mounting and Clearance

Pre-assembled and Pre-wired Tower Light

Mounting on Horizontal Support (Direct or with Fixing Plate)
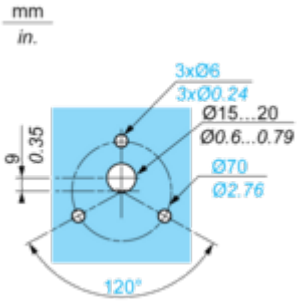
Panel cut-out