Product data sheet

Specifications

To be discontinued

Complete pre wired monolithic tower light, Harmony XVC, plastic, red orange green, 100mm, base mounting, steady or flashing, IP54, 24V DC

XVC1B3K

Discontinued on: Feb 27, 2026

To be end-of-service on: Dec 31, 2026

Product availability: Non-Stock - Not normally stocked in distribution facility

Main

Range of Product	Harmony XVC1
Product or Component Type	Complete pre-wired monolithic tower light
Beacon or indicator bank unit type	3 illuminated units
Sound signalling	Without
Mounting diameter	3.9 in (100 mm)
Component name	XVC
Light source	LED steady or flashing red LED steady or flashing orange LED steady or flashing green
[Us] rated supply voltage	24 V
Supply circuit type	DC

Complementary

Material	Polycarbonate: illuminated unit ABS (acrylonitrile butadiene-styrene): base unit PBT + ABS (UL94-V0): top cover
Product mounting	On base
Cable cross section	0.0005 in² (0.33 mm²) 0.001 in² (0.83 mm²)
AWG Gauge	18 AWG 22 AWG
Cable length	19.7 in (500 mm)
Marking	CE
[Uimp] rated impulse withstand voltage	0.8 kV
Current Consumption	300 mA
Flashing frequency	0.7…3 Hz
Product Weight	2.4 lb(US) (1.1 kg)
Height	14.6 in (372 mm)

Environment

Price is “List Price” and may be subject to a trade discount – check with your local distributor or retailer for actual price.

Disclaimer: This documentation is not intended as a substitute for and is not to be used for determining suitability or reliability of these products for specific user applications

Standards	IEC 61000-6-3 IEC 61000-6-4 IEC 61000-6-2
Product Certifications	UL
Protective treatment	TC
Ambient Air Temperature for Storage	-31…158 °F (-35…70 °C)
Ambient Air Temperature for Operation	-22…122 °F (-30…50 °C)
Electrical shock protection class	Class II conforming to IEC 61140
IP degree of protection	IP54 IEC 60529

Ordering and shipping details

Category	US100XV22617
Discount Schedule	00XV
GTIN	3606480032783
Returnability	Yes
Country of origin	ID

Packing Units

Unit Type of Package 1	PCE
Nbr. of units in pkg.	1
Package 1 Height	8.465 in (21.500 cm)
Package 1 Width	8.661 in (22.000 cm)
Package 1 Length	17.913 in (45.500 cm)
Package weight(Lbs)	4.237 lb(US) (1.922 kg)
Unit Type of Package 2	P06
Number of Units in Package 2	9
Package 2 Height	29.528 in (75.000 cm)
Package 2 Width	23.622 in (60.000 cm)
Package 2 Length	31.496 in (80.000 cm)
Package 2 Weight	56.875 lb(US) (25.798 kg)

Contractual warranty

Warranty (in months)	18

Environmental Data

Schneider Electric aims to achieve Net Zero status by 2050 through supply chain partnerships, lower impact materials, and circularity via our ongoing “Use Better, Use Longer, Use Again” campaign to extend product lifetimes and recyclability.

Environmental Data explained

How we assess product sustainability

Use Better

Materials and Substances

Packaging made with recycled cardboard	**Yes**
Packaging without single use plastic	**Yes**
EU RoHS Directive	**Compliant By Exemption**
California proposition 65	**WARNING: This product can expose you to chemicals including: Lead and lead compounds, which is known to the State of California to cause cancer and birth defects or other reproductive harm. For more information go to www.P65Warnings.ca.gov**

Use Longer

Lifetime extension

Repair	**No**

Use Again

Repack and remanufacture

Take-back	**No**

Dimensions Drawings

Pre-assembled and Pre-wired Tower Light

Dimensions

Below drawing shows the maximum configuration of the product. Select the number of stages according to the product characteristics in order to get **b** dimension.

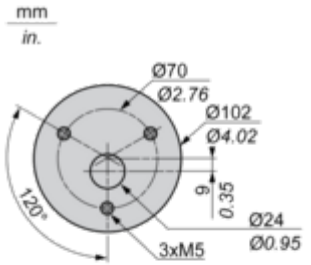

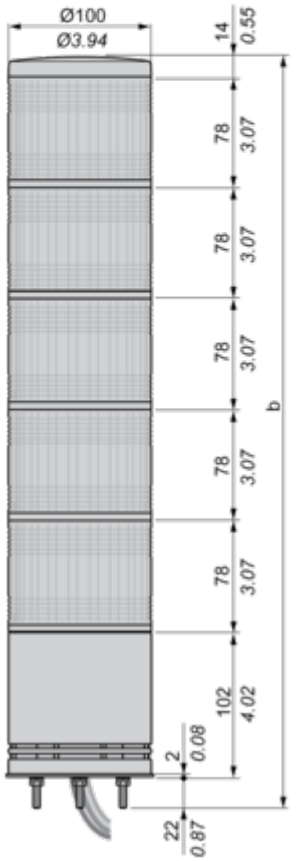

No. of illuminated units	b in mm	b in in.
1	216	8.50
2	294	11.57
3	372	14.65
4	450	17.72
5	528	20.79

Mounting and Clearance

Pre-assembled and Pre-wired Tower Light

Mounting on Horizontal Support (Direct or with Fixing Plate)
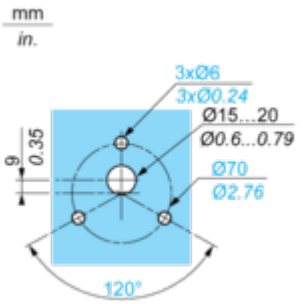
Panel cut-out