Product data sheet

Specifications

Discontinued

Complete beacon, Harmony XVB, illuminated, plastic, orange, 70mm, flashing, incandescent with BA15d base, 24V AC

XVBL4B5

Discontinued on: Jun 30, 2025

Product availability: Stock - Normally stocked in distribution facility

Main

Range of Product	Harmony XVB Universal
Product or Component Type	Complete beacon
Beacon or indicator bank unit type	Base unit direct or tube fixing Illuminated unit
Signalling type	Flashing
Mounting diameter	2.8 in (70 mm)
Component name	XVBL
Material	Glass reinforced polyamide: base unit Polycarbonate: illuminated unit
Light source	Bulb not included, orange
Bulb type	Incandescent Incandescent BA 15d Protected LED
[Us] rated supply voltage	24 V AC 24...48 V DC
Maximum power dissipation in W	7 W

Complementary

Connections - terminals	Screw clamp terminals, <= 1 x 1.5 mm² with cable end
[Ui] rated insulation voltage	250 V IEC 60947-1
Nominal voltage limit	0.85...1.1 Un IEC 60947-5-1
[Uimp] rated impulse withstand voltage	4 kV IEC 60947-1
Flashing frequency	1 Hz
CAD overall width	2.8 in (70 mm)
CAD overall height	5.5 in (139 mm)
CAD overall depth	2.8 in (70 mm)
Terminals description ISO n°1	(COM-1)PW (GND)GROUND
Net Weight	0.62 lb(US) (0.28 kg)

Environment

Pollution degree	2

Price is “List Price” and may be subject to a trade discount – check with your local distributor or retailer for actual price.

Disclaimer: This documentation is not intended as a substitute for and is not to be used for determining suitability or reliability of these products for specific user applications

Product Certifications	CCC EAC CSA C22-2 No 14 UL 508
Standards	IEC 60947-5-1
Protective treatment	TC
Ambient Air Temperature for Storage	-40…158 °F (-40…70 °C)
Electrical shock protection class	Class I on support tube IEC 61140 Class II on base unit IEC 61140
IP degree of protection	IP65 on fixing base XVBZ0. IEC 60529 IP66 on base unit IEC 60529
NEMA degree of protection	Type 4X UL indoor)

Ordering and shipping details

Category	US100XV22611
Discount Schedule	00XV
GTIN	3389110844207
Returnability	Yes
Country of origin	CZ

Packing Units

Unit Type of Package 1	PCE
Nbr. of units in pkg.	1
Package 1 Height	3.15 in (8.0 cm)
Package 1 Width	5.83 in (14.8 cm)
Package 1 Length	3.23 in (8.2 cm)
Package weight(Lbs)	9.9 oz (280.0 g)
Unit Type of Package 2	S03
Number of Units in Package 2	18
Package 2 Height	11.81 in (30.0 cm)
Package 2 Width	11.81 in (30.0 cm)
Package 2 Length	15.75 in (40.0 cm)
Package 2 Weight	11.947 lb(US) (5.419 kg)

Contractual warranty

Warranty	18 months

Environmental Data

Schneider Electric aims to achieve Net Zero status by 2050 through supply chain partnerships, lower impact materials, and circularity via our ongoing “Use Better, Use Longer, Use Again” campaign to extend product lifetimes and recyclability.

Environmental Data explained >

How we assess product sustainability >

Environmental footprint

Carbon footprint (kg CO2 eq, Total Life cycle)	89

Use Better

Materials and Substances

Packaging made with recycled cardboard	Yes
Packaging without single use plastic	Yes
EU RoHS Directive	Pro-active compliance (Product out of EU RoHS legal scope)
SCIP Number	124e2d7a-5b1e-45ca-b93c-220dd91b55b6
REACh Regulation	REACh Declaration
California proposition 65	WARNING: This product can expose you to chemicals including: Lead and lead compounds, which is known to the State of California to cause cancer and birth defects or other reproductive harm. For more information go to www.P65Warnings.ca.gov

Use Again

Repack and remanufacture

Circularity Profile	No need of specific recycling operations
Take-back	No
WEEE	The product must be disposed on European Union markets following specific waste collection and never end up in rubbish bins.

Dimensions Drawings

Illuminated Beacon for BA 15d Bulb or LED

Dimensions

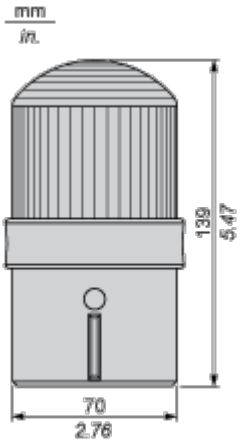

Connections and Schema

Illuminated Beacon

Wiring Diagram

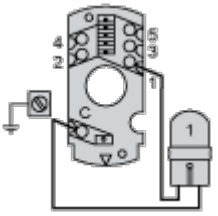

Technical Illustration

Dimensions

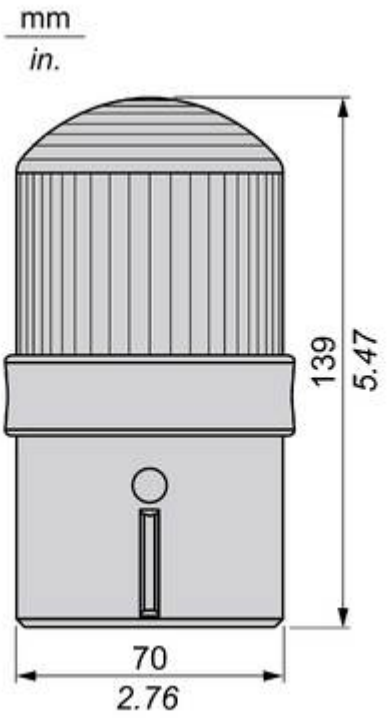

Technical Illustration

Wiring diagram

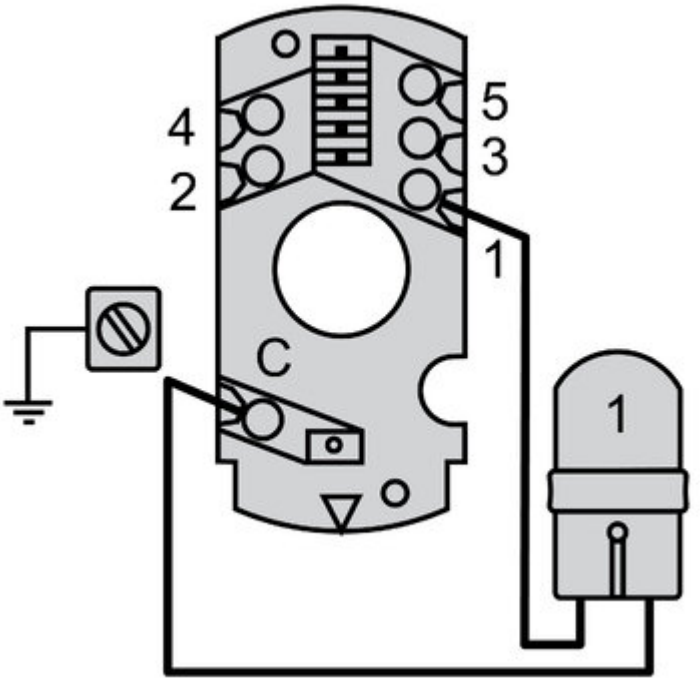

Offer Marketing Illustration

Product benefits / Features

Image of product / Alternate images

Alternative