# Product data sheet

Specifications

Discontinued

## Complete beacon, Harmony XVB Universal, indicating 48 VDC 10 W +options

XVBL4B3

Discontinued on: Jun 30, 2025

**Product availability: Non-Stock - Not normally stocked in distribution facility**

## Main

| | |
|---|---|
| **Range of Product** | Harmony XVB Universal |
| **Product or Component Type** | Complete beacon |
| **Beacon or indicator bank unit type** | Base unit direct or tube fixing<br>Illuminated unit |
| **Signalling type** | Flashing |
| **Mounting diameter** | 2.8 in (70 mm) |
| **Component name** | XVBL |
| **Material** | Glass reinforced polyamide: base unit<br>Polycarbonate: illuminated unit |
| **Light source** | Bulb not included, green |
| **Bulb type** | Incandescent<br>Incandescent BA 15d<br>Protected LED |
| **[Us] rated supply voltage** | 24 V AC<br>24...48 V DC |
| **Maximum power dissipation in W** | 7 W |

## Complementary

| | |
|---|---|
| **Connections - terminals** | Screw clamp terminals, <= 1 x 1.5 mm² with cable end |
| **[Ui] rated insulation voltage** | 250 V IEC 60947-1 |
| **Nominal voltage limit** | 0.85...1.1 Un IEC 60947-5-1 |
| **[Uimp] rated impulse withstand voltage** | 4 kV IEC 60947-1 |
| **Flashing frequency** | 1 Hz |
| **CAD overall width** | 2.8 in (70 mm) |
| **CAD overall height** | 5.5 in (139 mm) |
| **CAD overall depth** | 2.8 in (70 mm) |
| **Terminals description ISO n°1** | (GND)GROUND<br>(COM-1)PW |
| **Net Weight** | 0.62 lb(US) (0.28 kg) |

## Environment

| | |
|---|---|
| **Pollution degree** | 2 |

Price is “List Price” and may be subject to a trade discount – check with your local distributor or retailer for actual price.

Disclaimer: This documentation is not intended as a substitute for and is not to be used for determining suitability or reliability of these products for specific user applications

| | |
|---|---|
| **Product Certifications** | CCC<br>EAC<br>CSA C22-2 No 14<br>UL 508 |
| **Standards** | IEC 60947-5-1 |
| **Protective treatment** | TC |
| **Ambient Air Temperature for Storage** | -40…158 °F (-40…70 °C) |
| **Electrical shock protection class** | Class I on support tube IEC 61140<br>Class II on base unit IEC 61140 |
| **IP degree of protection** | IP65 on fixing base XVBZ0. IEC 60529<br>IP66 on base unit IEC 60529 |
| **NEMA degree of protection** | Type 4X UL indoor) |

## Ordering and shipping details

| | |
|---|---|
| **Category** | US100XV22611 |
| **Discount Schedule** | 00XV |
| **GTIN** | 3389110844184 |
| **Returnability** | Yes |
| **Country of origin** | CZ |

## Packing Units

| | |
|---|---|
| **Unit Type of Package 1** | PCE |
| **Nbr. of units in pkg.** | 1 |
| **Package 1 Height** | 3.11 in (7.900 cm) |
| **Package 1 Width** | 3.23 in (8.200 cm) |
| **Package 1 Length** | 5.87 in (14.900 cm) |
| **Package weight(Lbs)** | 9.806 oz (278.000 g) |
| **Unit Type of Package 2** | S03 |
| **Number of Units in Package 2** | 18 |
| **Package 2 Height** | 11.81 in (30.000 cm) |
| **Package 2 Width** | 11.81 in (30.000 cm) |
| **Package 2 Length** | 15.75 in (40.000 cm) |
| **Package 2 Weight** | 12.683 lb(US) (5.753 kg) |

## Contractual warranty

| | |
|---|---|
| **Warranty** | 18 months |

## Environmental Data

Schneider Electric aims to achieve Net Zero status by 2050 through supply chain partnerships, lower impact materials, and circularity via our ongoing “Use Better, Use Longer, Use Again” campaign to extend product lifetimes and recyclability.

Environmental Data explained >

How we assess product sustainability >

### Use Better

#### Materials and Substances

| | |
|---|---|
| Packaging made with recycled cardboard | **Yes** |
| Packaging without single use plastic | **Yes** |
| EU RoHS Directive | **Pro-active compliance (Product out of EU RoHS legal scope)** |
| SCIP Number | **124e2d7a-5b1e-45ca-b93c-220dd91b55b6** |
| REACh Regulation | **REACh Declaration** |
| California proposition 65 | **WARNING: This product can expose you to chemicals including: Lead and lead compounds, which is known to the State of California to cause cancer and birth defects or other reproductive harm. For more information go to www.P65Warnings.ca.gov** |

### Use Again

#### Repack and remanufacture

| | |
|---|---|
| Circularity Profile | **No need of specific recycling operations** |
| Take-back | **No** |
| WEEE | **The product must be disposed on European Union markets following specific waste collection and never end up in rubbish bins.** |

## Dimensions Drawings

### Illuminated Beacon for BA 15d Bulb or LED

#### Dimensions

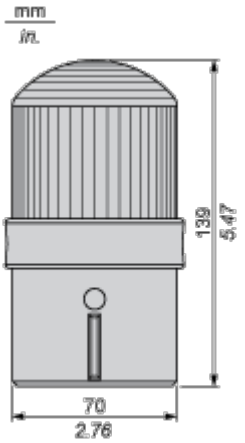

Connections and Schema

## Illuminated Beacon

### Wiring Diagram

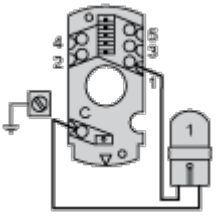

Technical Illustration

**Dimensions**

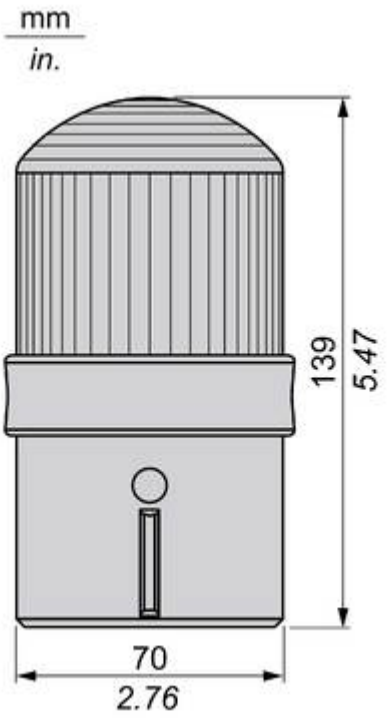

Technical Illustration
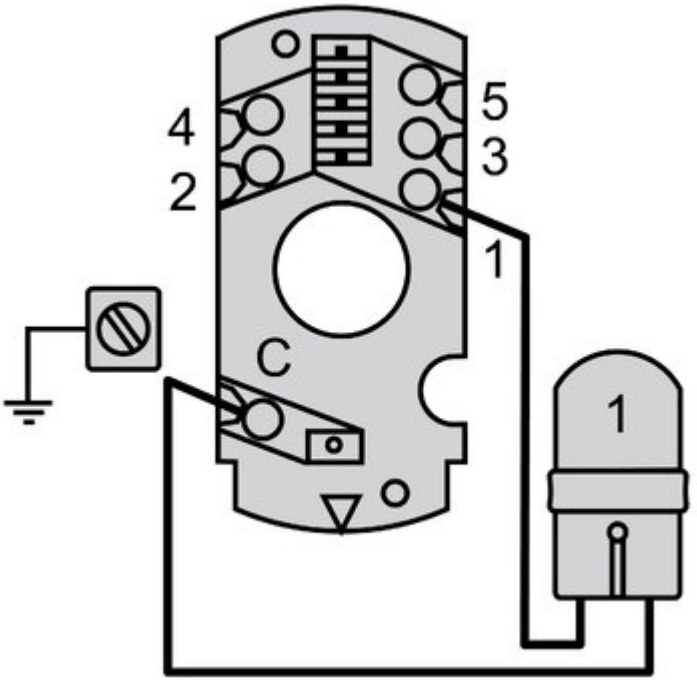
**Wiring diagram**