# Product data sheet

Specifications

## Light Module, Harmony XV6, Ø60mm Modular Tower Light, Green Lens, Flashing

XV6C63

**Product availability: Stock - Normally stocked in distribution facility**

## Main

| | |
|---|---|
| **Range of Product** | Harmony XV6 |
| **Product or Component Type** | Light module |
| **Device Composition** | Standard lens |
| **Device short name** | XV6 |
| **Mounting diameter** | 2.4 in (60 mm) |
| **Signalling type** | Flashing |
| **Light color** | LED, green |
| **Material** | Polycarbonate |
| **Product Weight** | 0.117 lb(US) (0.053 kg) |
| **Mounting position** | Upright/inverted |

## Complementary

| | |
|---|---|
| **Flashing frequency** | 2 Hz |
| **Service life in hours** | 50000 h |
| **[Ue] rated operational voltage** | 24 V AC/DC |
| **Rated operational voltage limits** | 21.6...26.4 V AC/DC |
| **Current consumption** | 180 mA 24 V AC<br>250 mA 24 V DC |
| **Inrush current** | 1 A |
| **Electrical shock protection class** | Class II |
| **[Ui] Rated Insulation Voltage** | 50 V |
| **[Uimp] rated impulse withstand voltage** | 500 V |

## Environment

| | |
|---|---|
| **Pollution degree** | 2 |
| **Ambient Air Temperature for Operation** | -13…122 °F (-25…50 °C) |
| **Ambient Air Temperature for Storage** | -40…158 °F (-40…70 °C) |
| **IP Degree of Protection** | IP65 |
| **Environmental Type ratings** | Type 12 |
| **Vibration resistance** | 6 gn +/- 0.5 mm 10…500 Hz)in operation |
| **Shock resistance** | 20 gn 11 ms) in operation |

Price is “List Price” and may be subject to a trade discount – check with your local distributor or retailer for actual price.

Disclaimer: This documentation is not intended as a substitute for and is not to be used for determining suitability or reliability of these products for specific user applications

| | |
|---|---|
| **Standards** | UL 60947-5-1<br>IEC 60947-5-1<br>CSA C22.2 No 60947-5-1 |
| **Product Certifications** | cULus<br>CCC<br>RCM<br>UKCA<br>CE |

## Ordering and shipping details

| | |
|---|---|
| **Category** | US10CS222608 |
| **Discount Schedule** | 0CS2 |
| **GTIN** | 3606487129981 |
| **Returnability** | Yes |
| **Country of origin** | DE |

## Packing Units

| | |
|---|---|
| **Unit Type of Package 1** | PCE |
| **Nbr. of units in pkg.** | 1 |
| **Package 1 Height** | 2.559 in (6.500 cm) |
| **Package 1 Width** | 2.953 in (7.500 cm) |
| **Package 1 Length** | 2.953 in (7.500 cm) |
| **Package weight(Lbs)** | 2.434 oz (69.000 g) |
| **Unit Type of Package 2** | S02 |
| **Number of Units in Package 2** | 30 |
| **Package 2 Height** | 5.906 in (15.000 cm) |
| **Package 2 Width** | 11.811 in (30.000 cm) |
| **Package 2 Length** | 15.748 in (40.000 cm) |
| **Package 2 Weight** | 5.335 lb(US) (2.420 kg) |

## Contractual warranty

| | |
|---|---|
| **Warranty (in months)** | 18 |

## Environmental Data

Schneider Electric aims to achieve Net Zero status by 2050 through supply chain partnerships, lower impact materials, and circularity via our ongoing “Use Better, Use Longer, Use Again” campaign to extend product lifetimes and recyclability.

Environmental Data explained

How we assess product sustainability

### Environmental footprint

| | |
|---|---|
| Total lifecycle Carbon footprint | **65 kg CO2 eq.** |
| Carbon footprint of the manufacturing phase [A1 to A3] | **0.8 kg CO2 eq.** |
| Carbon footprint of the distribution phase [A4] | **0 kg CO2 eq.** |
| Carbon footprint of the installation phase [A5] | **0 kg CO2 eq.** |
| Carbon footprint of the use phase [B2, B3, B4, B6] | **64 kg CO2 eq.** |
| Carbon footprint of the end-of-life phase [C1 to C4] | **0.1 kg CO2 eq.** |
| Environmental Disclosure | **Product Environmental Profile** |

## Use Better

### Materials and Substances

| | |
|---|---|
| Packaging made with recycled cardboard | **Yes** |
| Packaging without single use plastic | **Yes** |
| EU RoHS Directive | **Compliant By Exemption** |
| REACh Regulation | **Reference contains Substances of Very High Concern above the threshold** |
| California proposition 65 | **WARNING: This product can expose you to chemicals including: Lead and lead compounds, which is known to the State of California to cause cancer and birth defects or other reproductive harm. For more information go to www.P65Warnings.ca.gov** |

## Use Longer

### Lifetime extension

| | |
|---|---|
| Repair | **No** |

## Use Again

### Repack and remanufacture

| | |
|---|---|
| Recyclability potential, in % | **89** |
| Circularity Profile | **End of Life Information** |
| Take-back | **No** |
| WEEE Label | **The product must be disposed on European Union markets following specific waste collection and never end up in rubbish bins.** |

Dimensions Drawings

## Dimensions

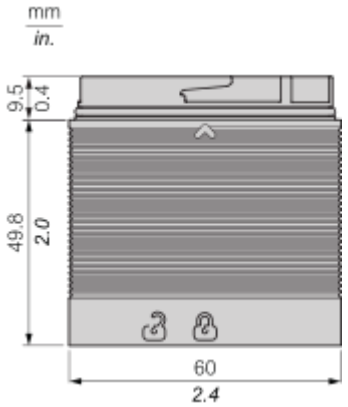

Mounting and Clearance

## Mounting Overview

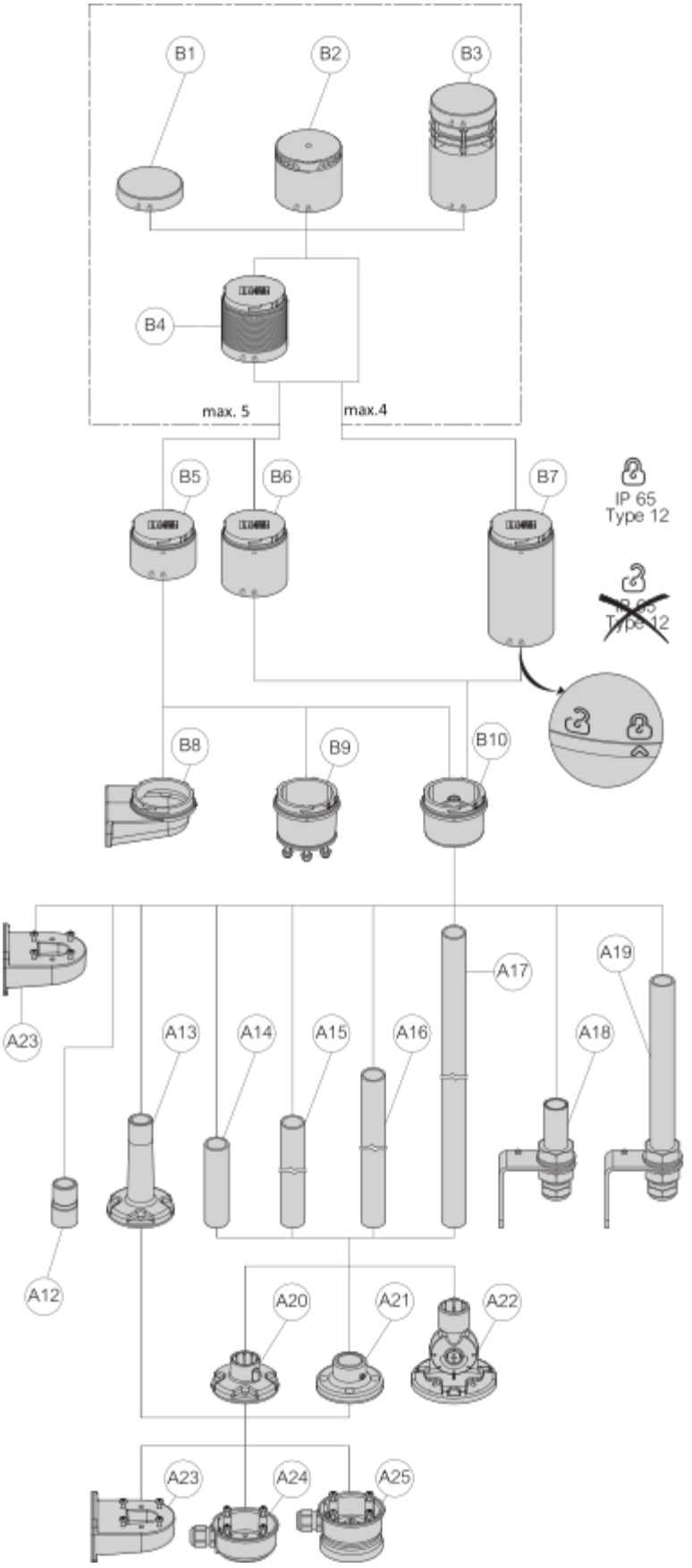


| Configurations | Part Number | Part Description |
|---|---|---|

| | | |
|---|---|---|
| B1, B5, B8 | XV6C21BL• | 24V Base With Wall Adapter & Cover |
| B1, B5, B9 | XV6C21BP• | 24V Base With 3-Pin & Cover |
| B1, B5, B10 | XV6C21B• | 24V Base Direct/ Tube & Cover |
| B1, B6, B10 | XV6C51W | USB Direct/ Tube & Cover |
| B1, B7, B10 | XV6C21M | AC Base Direct/ Tube & Cover |
| B2 | XV6C9S• | Buzzer 2 Tones |
| | XV6C9T• | Buzzer 8 Tones |
| B3 | XV6C9V• | Editable Voice Alarm |
| B4 | XV6C2• | Steady Lens |
| | XV6C2•C | Steady Clear Lens |
| | XV6C5• | Blinking Lens |
| | XV6C6• | Flashing Lens |
| | XV6C29 | Steady Clear Lens (Multi Colored) |
| A12 | XVZ00 | 1/2" NPT Adapter |
| A13 | XVZ02• | Plastic Fixing Plate With Pole |
| A14 | XVZ100 | Alu Ø25mm Pole 100mm Length |
| A15 | XVZ250 | Alu Ø25mm Pole 250mm Length |
| A16 | XVZ400 | Alu Ø25mm Pole 400mm Length |
| A17 | XVZ800 | Alu Ø25mm Pole 800mm Length |
| A18 | XVZ100T | L Bracket Alu Ø25mm Pole 100mm |
| A19 | XVZ250T | L Bracket Alu Ø25mm Pole 250mm |
| A20 | XVZ01• | Plastic Fixing Plate |
| A21 | XVZ11 | Metal Fixing Plate |
| A22 | XVZ06• | Plastic Foldable Bracket |
| A23 | XVZ09 | Plastic Wall Mount Bracket |
| A24 | XVZ07 | Side Entry Adapter |
| A25 | XVZ08 | Magnetic Adapter |

Technical Illustration

**Dimensions**

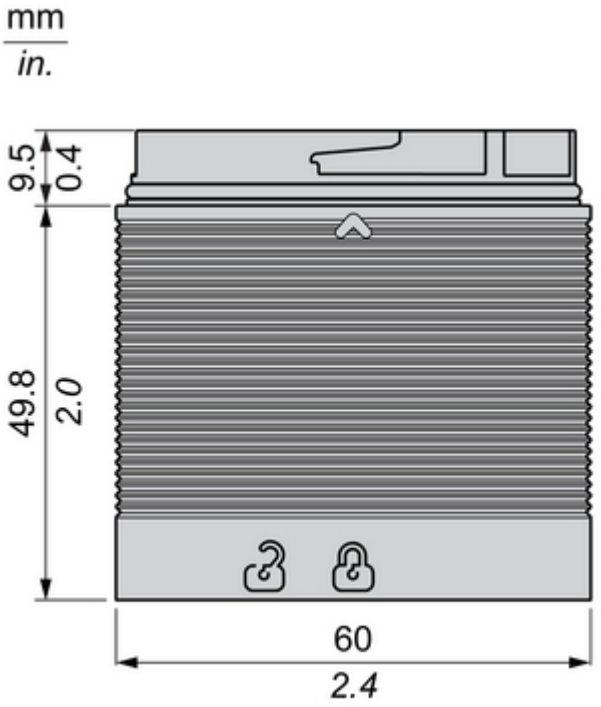

Offer Marketing Illustration

**Product benefits / Features**

Offer Marketing Illustration

**Product benefits / Features**

Image of product / Alternate images

**Alternative**

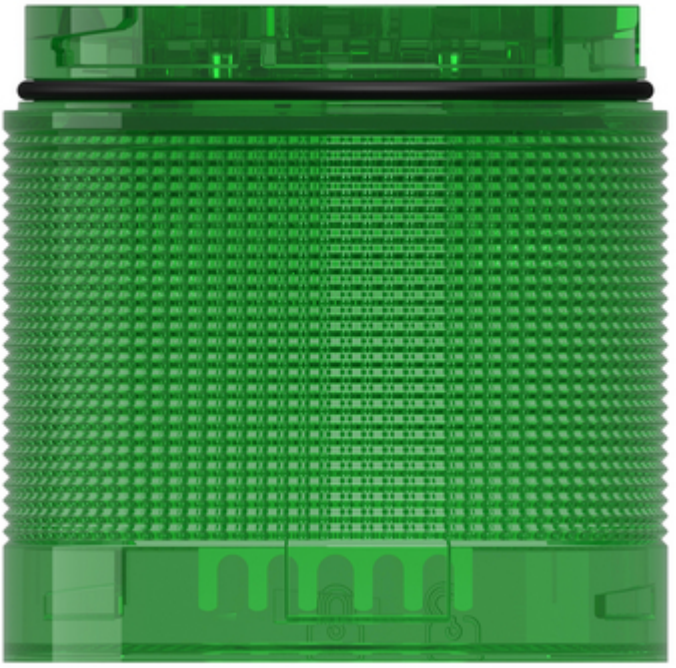

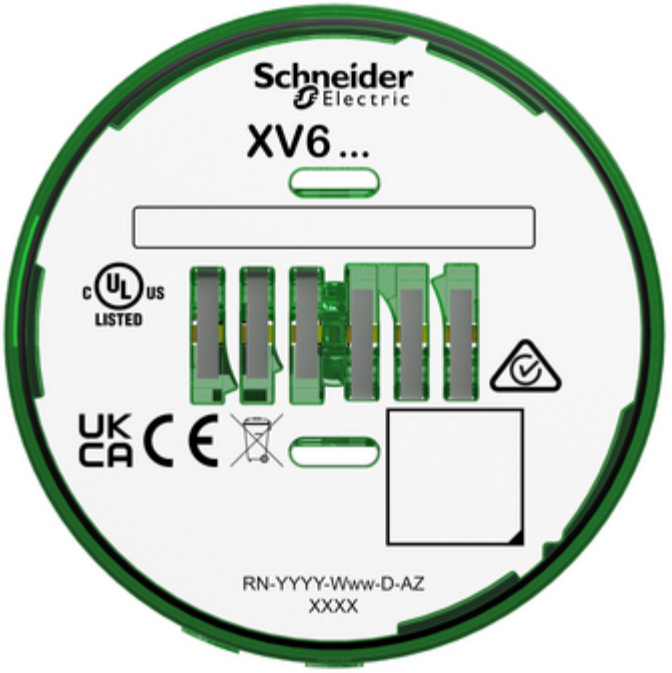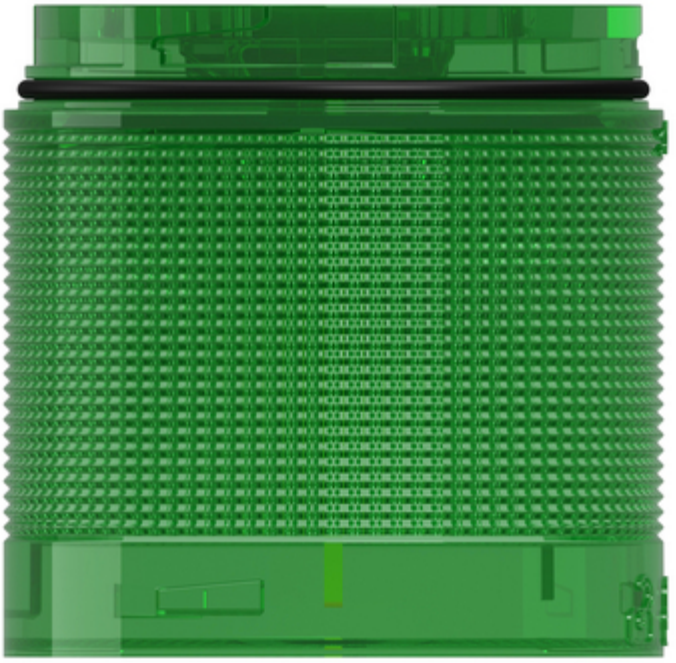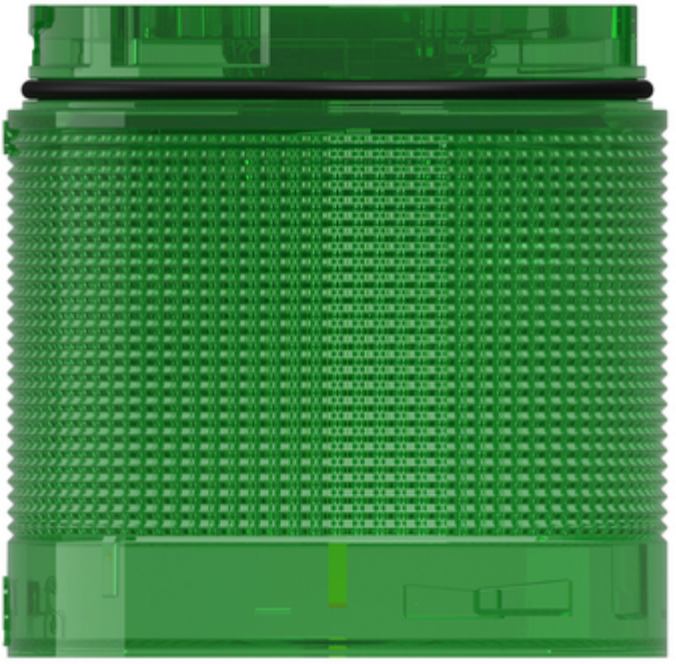
Schneider Electric
XV6...
c UL us
LISTED
UK CA
RN-YYYY-Www-D-AZ
XXXX