Product data sheet

Specifications

Light Module, Harmony XV4, Ø40mm Modular Tower Light, White Lens, Blinking

XV4C57

Product availability: Stock - Normally stocked in distribution facility

Main

Range of Product	Harmony XV4
Product or Component Type	Light module
Device Composition	Standard lens
Device short name	XV4
Mounting diameter	1.6 in (40 mm)
Signalling type	Blinking
Light color	LED, white
Material	Polycarbonate
Product Weight	0.077 lb(US) (0.035 kg)
Mounting position	Upright/inverted

Complementary

Blinking frequency	1 Hz
Service life in hours	50000 h
[Ue] rated operational voltage	24 V AC/DC
Rated operational voltage limits	21.6...26.4 V AC/DC
Current consumption	30 mA 24 V AC 30 mA 24 V DC
Inrush current	500 mA
Electrical shock protection class	Class II
[Ui] Rated Insulation Voltage	50 V
[Uimp] rated impulse withstand voltage	500 V

Environment

Pollution degree	2
Ambient Air Temperature for Operation	14…122 °F (-10…50 °C)
Ambient Air Temperature for Storage	-31…158 °F (-35…70 °C)
IP Degree of Protection	IP65
Environmental Type ratings	Type 12
Vibration resistance	6 gn +/- 0.5 mm 10…150 Hz)in operation
Shock resistance	20 gn 11 ms) in operation

Price is “List Price” and may be subject to a trade discount – check with your local distributor or retailer for actual price.

Disclaimer: This documentation is not intended as a substitute for and is not to be used for determining suitability or reliability of these products for specific user applications

Standards	UL 60947-5-1 IEC 60947-5-1 CSA C22.2 No 60947-5-1
Product Certifications	cULus CCC RCM UKCA CE

Ordering and shipping details

Category	US10CS222609
Discount Schedule	0CS2
GTIN	3606487130376
Returnability	Yes
Country of origin	DE

Packing Units

Unit Type of Package 1	PCE
Nbr. of units in pkg.	1
Package 1 Height	2.6 in (6.5 cm)
Package 1 Width	1.67 in (4.25 cm)
Package 1 Length	1.67 in (4.25 cm)
Package weight(Lbs)	1.5 oz (42 g)

Contractual warranty

Warranty (in months)	18

Environmental Data

Schneider Electric aims to achieve Net Zero status by 2050 through supply chain partnerships, lower impact materials, and circularity via our ongoing “Use Better, Use Longer, Use Again” campaign to extend product lifetimes and recyclability.

Environmental Data explained

How we assess product sustainability

Environmental footprint

Total lifecycle Carbon footprint	**8 kg CO2 eq.**
Carbon footprint of the manufacturing phase [A1 to A3]	**0.6 kg CO2 eq.**
Carbon footprint of the distribution phase [A4]	**0 kg CO2 eq.**
Carbon footprint of the installation phase [A5]	**0 kg CO2 eq.**
Carbon footprint of the use phase [B2, B3, B4, B6]	**8 kg CO2 eq.**
Carbon footprint of the end-of-life phase [C1 to C4]	**0 kg CO2 eq.**
Environmental Disclosure	**Product Environmental Profile**

Use Better

Materials and Substances

Packaging made with recycled cardboard	**Yes**
Packaging without single use plastic	**Yes**
EU RoHS Directive	**Compliant By Exemption**
REACh Regulation	**Reference contains Substances of Very High Concern above the threshold**
California proposition 65	**WARNING: This product can expose you to chemicals including: Lead and lead compounds, which is known to the State of California to cause cancer and birth defects or other reproductive harm. For more information go to www.P65Warnings.ca.gov**

Use Longer

Lifetime extension

Repair	**No**

Use Again

Repack and remanufacture

Recyclability potential, in %	**80**
Circularity Profile	**End of Life Information**
Take-back	**No**
WEEE Label	**The product must be disposed on European Union markets following specific waste collection and never end up in rubbish bins.**

Dimensions Drawings

Dimensions

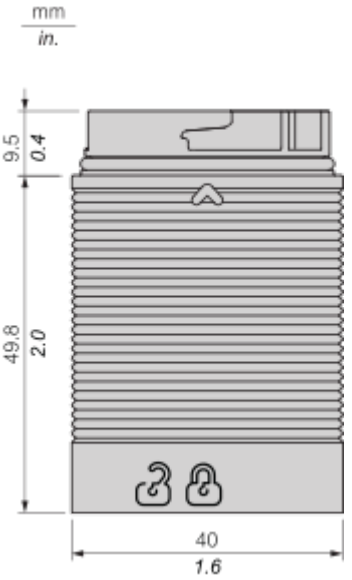

Mounting and Clearance

Mounting Overview

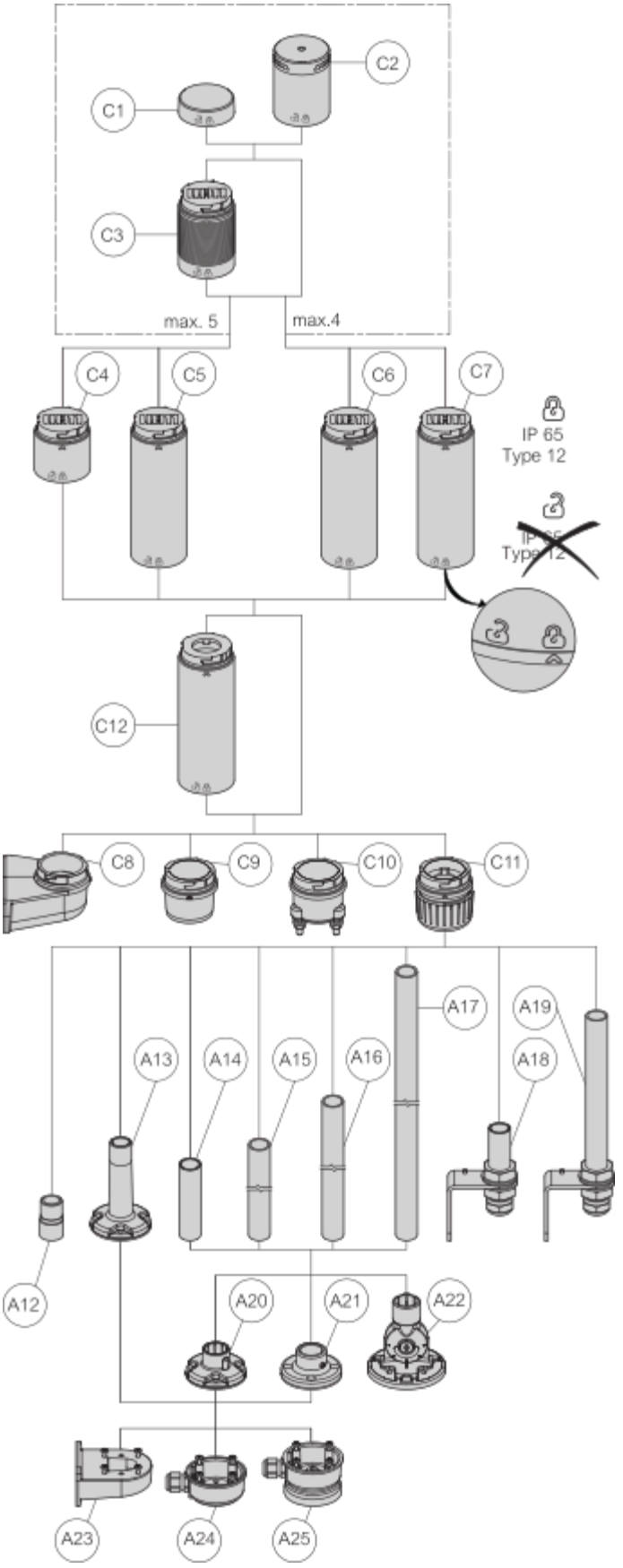

Configurations	Part Number	Part Description

C1, C4, C8	XV4C21BL	24V Base With Wall Mount & Cover
C1, C4, C9	XV4C21BG	24V Base Direct Mount & Cover
C1, C4, C10	XV4C21BP	24V Base With 3-Pin Adapter & Cover
C1, C4, C11	XV4C21BT	24V Base With Tube Adapter & Cover
C1, C5	XV4C21BFX	24V Blinking Base & Cover only
C1, C6	XV4C21MX	AC Base & Cover Without Adapter
C1, C7	XV4C21MFX	AC Blinking & Cover Without Adapter
C8	XV4C040	Wall Mount Adapter
C9	XV4C010	Direct Mount Adapter
C10	XV4C030	Direct Mount 3-Pin Adapter
C11	XV4C020	Tube Adapter
C12	XV4CT00	Body Extender
C2	XV4C9S	Buzzer 2 Tones
	XV4C9T	Buzzer 8 Tones
C3	XV4C2•	Steady Lens
	XV4C2•C	Steady Clear Lens
	XV4C5•	Blinking Lens
	XV4C29	Steady Clear Lens (Multi Colored)
A12	XVZ00	1/2" NPT Adapter
A13	XVZ02•	Plastic Fixing Plate With Pole
A14	XVZ100	Alu Ø25mm Pole 100mm Length
A15	XVZ250	Alu Ø25mm Pole 250mm Length
A16	XVZ400	Alu Ø25mm Pole 400mm Length
A17	XVZ800	Alu Ø25mm Pole 800mm Length
A18	XVZ100T	L Bracket Alu Ø25mm Pole 100mm
A19	XVZ250T	L Bracket Alu Ø25mm Pole 250mm
A20	XVZ01•	Plastic Fixing Plate
A21	XVZ11	Metal Fixing Plate

A22	XVZ06•	Plastic Foldable Bracket
A23	XVZ09	Plastic Wall Mount Bracket
A24	XVZ07	Side Entry Adapter
A25	XVZ08	Magnetic Adapter

Technical Illustration

Dimensions

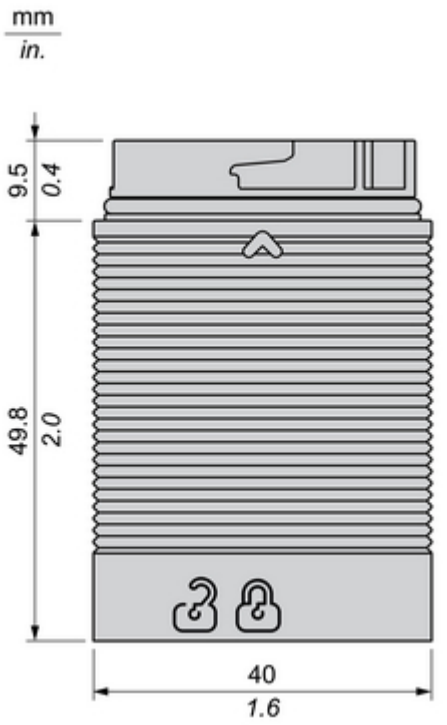

Offer Marketing Illustration

Product benefits / Features

Offer Marketing Illustration

Product benefits / Features

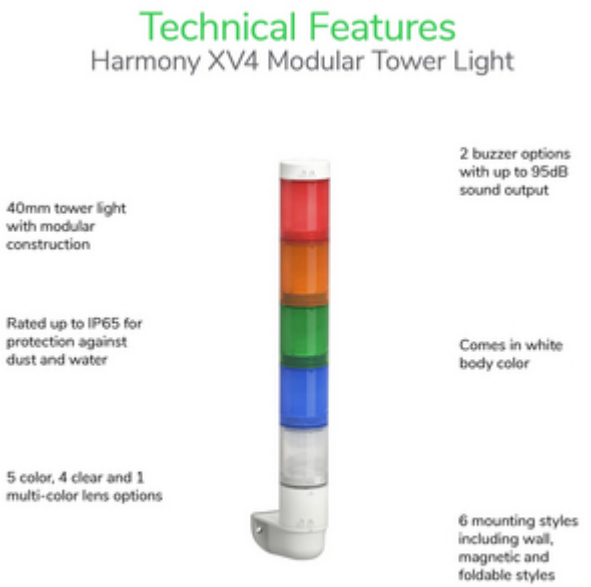

Image of product / Alternate images

Alternative

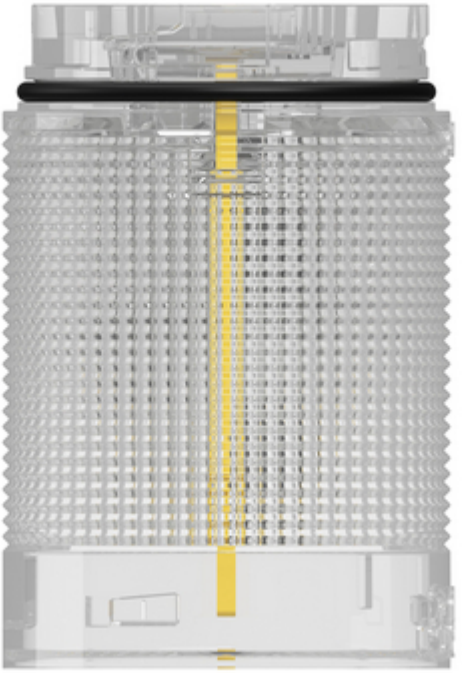

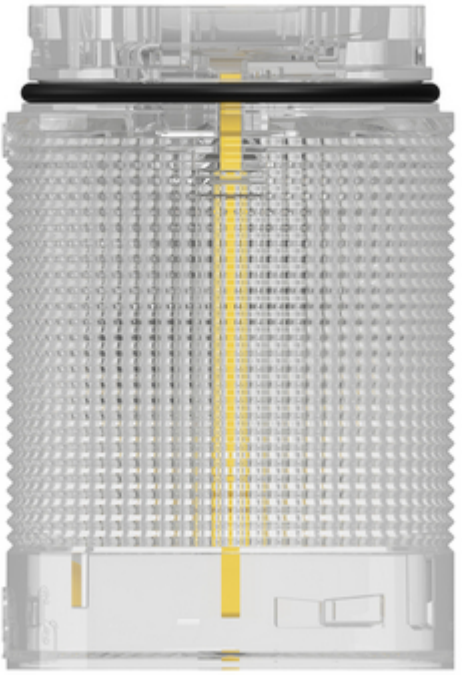

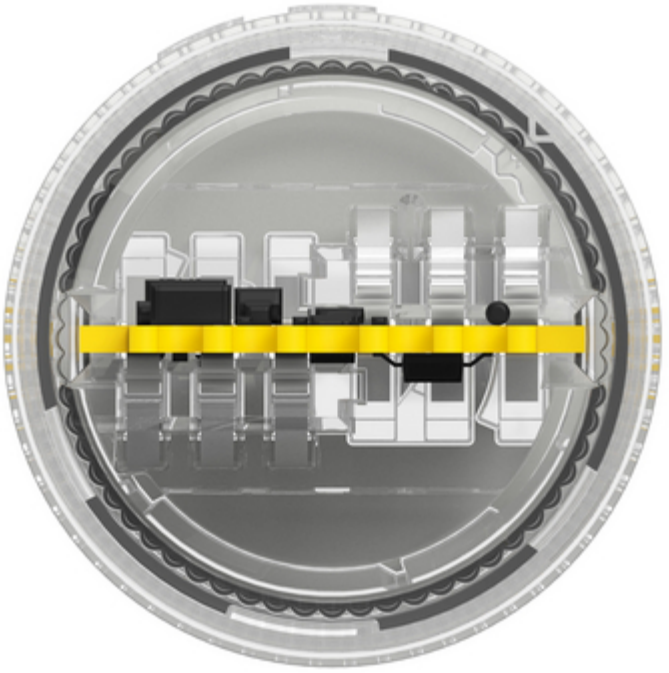

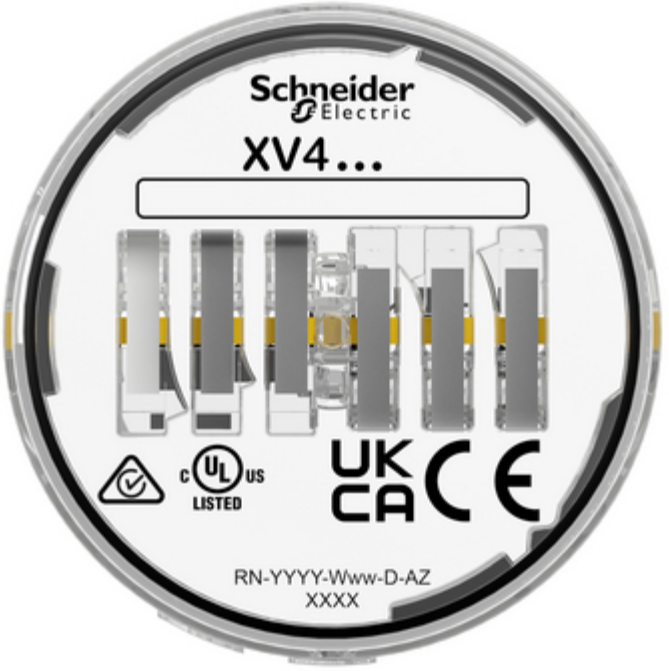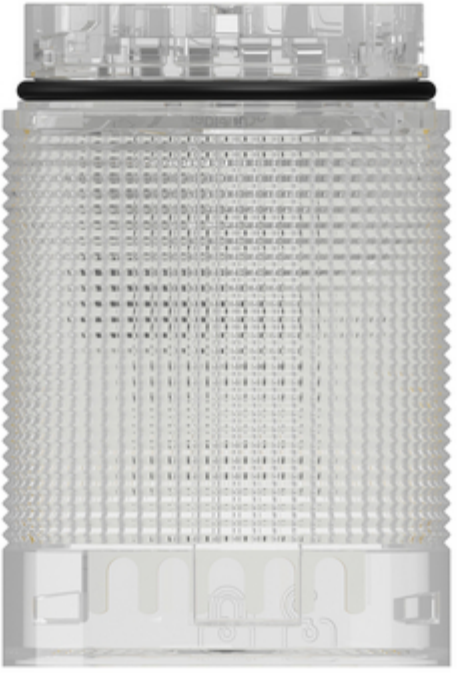
Schneider Electric
XV4...
c UL us
LISTED
UK CA
RN-YYYY-Www-D-AZ
XXXX