Product data sheet

Specifications

safety module, Harmony XPSU, Cat 4, features 2 x XPSUAF with enabling movement, 48 to 240V AC or DC, screw

XPSUS32AP

Product availability: Non-Stock - Not normally stocked in distribution facility

Main

Range of Product	Harmony Safety Automation
Product or Component Type	Safety module
Safety module name	XPSUS
Safety module application	For electrical monitoring of two-hand control stations Monitoring antivalent contacts For emergency stop, guard and light curtain monitoring For enabling switch monitoring
Function of module	Emergency stop button with 2 NC contacts Guard monitoring with 1 or 2 limit switches Monitoring 2 PNP sensors Magnetic switch monitoring Light curtain monitoring RFID switch Monitoring of electro-sensitive protection equipment (ESPE) Enabling switch monitoring Proximity sensor monitoring Monitoring two-hand control station
Safety level	Can reach PL e/category 4 ISO 13849-1 Can reach SILCL 3 IEC 62061 Can reach SIL 3 IEC 61508
Safety reliability data	MTTFd > 30 years ISO 13849-1 Dcavg >= 99 % ISO 13849-1 PFHd = 1.61E-09 ISO 13849-1 HFT = 1 IEC 62061 PFHd = 1.61E-09 IEC 62061 SFF > 99% IEC 62061 HFT = 1 IEC 61508-1 PFHd = 1.61E-09 IEC 61508-1 SFF > 99% IEC 61508-1 Type = B IEC 61508-1
Electrical circuit type	NC pair PNP pair Antivalent pair OSSD pair
Connections - terminals	Removable screw terminal block, 0.2...2.5 mm² solid or flexible Removable screw terminal block, 0.25...2.5 mm² flexible with ferrule single conductor Removable screw terminal block, 0.2...1.5 mm² solid or flexible twin conductor Removable screw terminal block, 2 x 0.25...1 mm² flexible with ferrule without cable end, with bezel Removable screw terminal block, 2 x 0.5...1.5 mm² flexible with ferrule with cable end, with bezel
[Us] Rated Supply Voltage	48...240 V AC/DC - 10...10 %

Complementary

Synchronisation time between inputs	0.5 s 2 s 4 s

Price is “List Price” and may be subject to a trade discount – check with your local distributor or retailer for actual price.

Disclaimer: This documentation is not intended as a substitute for and is not to be used for determining suitability or reliability of these products for specific user applications

Type of start	Automatic/manual/monitored
Power consumption in W	3 W 48 V DC
Power consumption in VA	8.5 VA 240 V AC 50/60 Hz
Input protection type	Internal, electronic
safety outputs	2 NO
safety inputs	2 safety input 24 V DC 5 mA
maximum wire resistance	500 Ohm
Input compatibility	Normally closed circuit ISO 14119 XC limit switch ISO 14119 Mechanical contact ISO 14119 Normally closed circuit ISO 13850 Antivalent pair ISO 14119 OSSD pair IEC 61496-1-2 Two-hand control EN 574/ISO 13851-III A Two-hand control EN 574/ISO 13851-III C 3-wire proximity sensors PNP
[Ie] rated operational current	5 A AC-1 for normally open relay contact 3 A AC-15 for normally open relay contact 5 A DC-1 for normally open relay contact 3 A DC-13 for normally open relay contact 3 A AC-1 for normally closed relay contact 1 A AC-15 for normally closed relay contact 3 A DC-1 for normally closed relay contact 1 A DC-13 for normally closed relay contact
control outputs	3 on/off configurable pulsed output
Input/output type	Semiconductor pulsed diagnostic output 24 V DC, 20 mA Z1, not safety-related
[Ith] conventional free air thermal current	8 A
Associated fuse rating	10 A gG NO relay output circuit IEC 60947-1
Minimum output current	10 mA relay output
Minimum output voltage	12 V relay output
Maximum response time on input open	20 ms
[Ui] rated insulation voltage	250 V 2)IEC 60947-1
[Uimp] rated impulse withstand voltage	4 kV II IEC 60947-1
Local signalling	LED (green) for power ON LED (red) for error LED (yellow) for safety output status LED (yellow) for start input LED (yellow) for safety input S12 LED (yellow) for safety input S13 LED (yellow) for safety input S22 LED (yellow) for safety input S23
Mounting Support	35 mm symmetrical DIN rail
Depth	4.7 in (120 mm)
Height	3.9 in (100 mm)
Width	0.9 in (22.5 mm)
Product Weight	0.441 lb(US) (0.200 kg)

Environment

Standards	IEC 60947-5-1 IEC 61508-1 functional safety standard IEC 61508-2 functional safety standard IEC 61508-3 functional safety standard IEC 61508-4 functional safety standard IEC 61508-5 functional safety standard IEC 61508-6 functional safety standard IEC 61508-7 functional safety standard ISO 13849-1 functional safety standard IEC 62061 functional safety standard
Product Certifications	TÜV cULus
IP degree of protection	IP20 terminals)IEC 60529 IP40 housing)IEC 60529 IP54 mounting area)IEC 60529
Ambient Air Temperature for Storage	-13…185 °F (-25…85 °C)
Relative Humidity	5…95 % non-condensing

Ordering and shipping details

Category	US1SAF222477
Discount Schedule	SAF2
GTIN	3606489601836
Returnability	No
Country of origin	ID

Packing Units

Unit Type of Package 1	PCE
Nbr. of units in pkg.	1
Package 1 Height	2.559 in (6.500 cm)
Package 1 Width	5.433 in (13.800 cm)
Package 1 Length	6.102 in (15.500 cm)
Package weight(Lbs)	10.335 oz (293.000 g)
Unit Type of Package 2	S03
Number of Units in Package 2	16
Package 2 Height	11.811 in (30.000 cm)
Package 2 Width	11.811 in (30.000 cm)
Package 2 Length	15.748 in (40.000 cm)
Package 2 Weight	11.691 lb(US) (5.303 kg)

Contractual warranty

Warranty (in months)	18

Environmental Data

Schneider Electric aims to achieve Net Zero status by 2050 through supply chain partnerships, lower impact materials, and circularity via our ongoing “Use Better, Use Longer, Use Again” campaign to extend product lifetimes and recyclability.

Environmental Data explained

How we assess product sustainability

Environmental footprint

Total lifecycle Carbon footprint	**103 kg CO2 eq.**
Carbon footprint of the manufacturing phase [A1 to A3]	**5 kg CO2 eq.**
Carbon footprint of the distribution phase [A4]	**0.1 kg CO2 eq.**
Carbon footprint of the installation phase [A5]	**0 kg CO2 eq.**
Carbon footprint of the use phase [B2, B3, B4, B6]	**97 kg CO2 eq.**
Carbon footprint of the end-of-life phase [C1 to C4]	**0.6 kg CO2 eq.**
Environmental Disclosure	**Product Environmental Profile**

Use Better

Materials and Substances

Packaging made with recycled cardboard	**Yes**
Packaging without single use plastic	**No**
SCIP Number	**152cf799-1df7-4892-81b4-4c890187f1d1**
EU RoHS Directive	**Compliant By Exemption**
REACh Regulation	**Reference contains Substances of Very High Concern above the threshold**
California proposition 65	**WARNING: This product can expose you to chemicals including: Lead and lead compounds, which is known to the State of California to cause cancer and birth defects or other reproductive harm. For more information go to www.P65Warnings.ca.gov**
PVC free	**Yes**

Use Longer

Lifetime extension

Repair	**No**

Use Again

Repack and remanufacture

Recyclability potential, in %	**0**
Circularity Profile	**End of Life Information**
Take-back	**No**
WEEE Label	**The product must be disposed on European Union markets following specific waste collection and never end up in rubbish bins.**

Dimensions Drawings

Dimensions

Front and Side Views

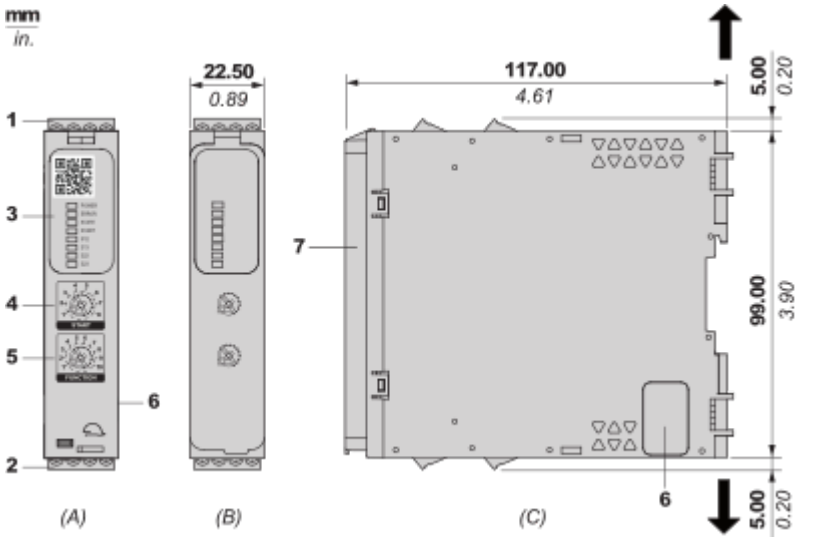

(A) : Product drawing
(B) : Screw clamp terminal
(C) : Side view
(1) : Removable terminal blocks, top
(2) : Removable terminal blocks, bottom
(3) : LED indicators
(4) : Start function selector
(5) : Function selector
(6) : Connector for optional output extension module (lateral)
(7) : Sealable transparent cover

mm / in. 7.0–8.0 / 0.28–0.31					
mm²	0,2... 2,5	0,25...2,5	0,2...1,5	0,25...1	0,5...1,5
AWG	24... 12	24...12	24...16	24...18	20...16
Ø 3,5 mm (0.14 in)				Nm	0.5... 0.6
				lb-in	4,4... 5,3

Mounting and Clearance

Mounting to DIN rail

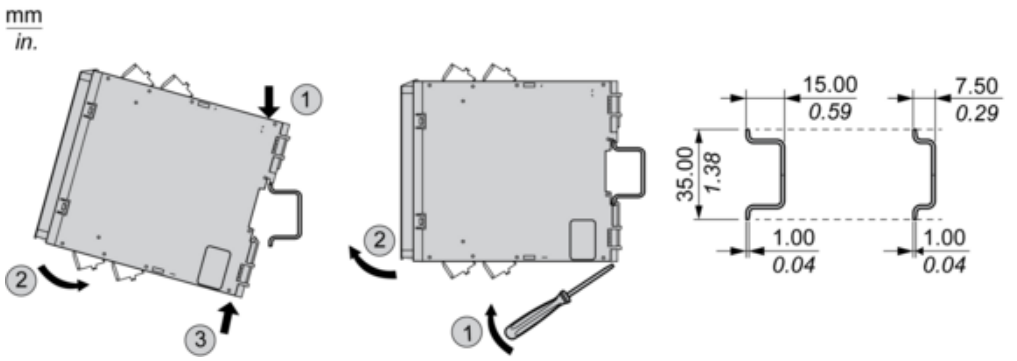

Screw-mounting

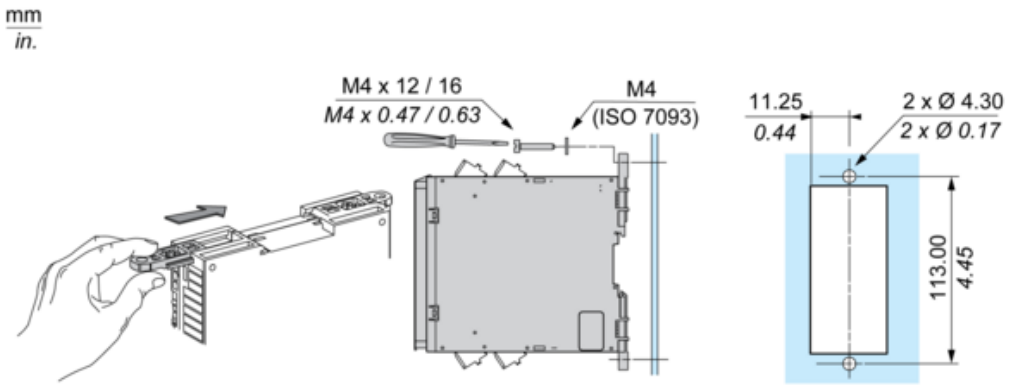

Connections and Schema

Wiring Drawing

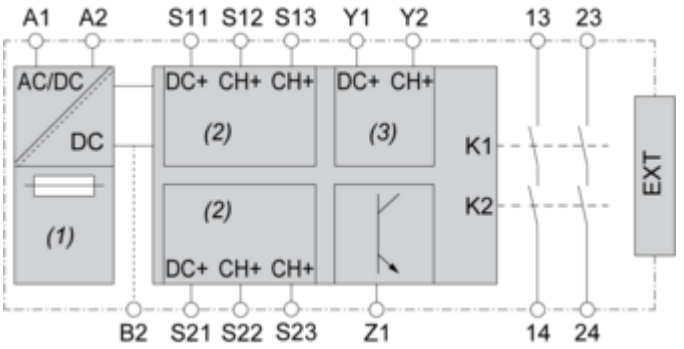

(1) : A1-A2 (Power supply)
(2) : S11-S12-S13-S21-S22-S23 (Single-channel safety input)
(3) : Y1-Y2 (Start)
13-23-14-24 : Output
EXT : Connector for optional extension module
B2 : Common ground terminal
Z1 : Pulsed output for diagnostics, not safety-related

Image of product / Alternate images

Alternative

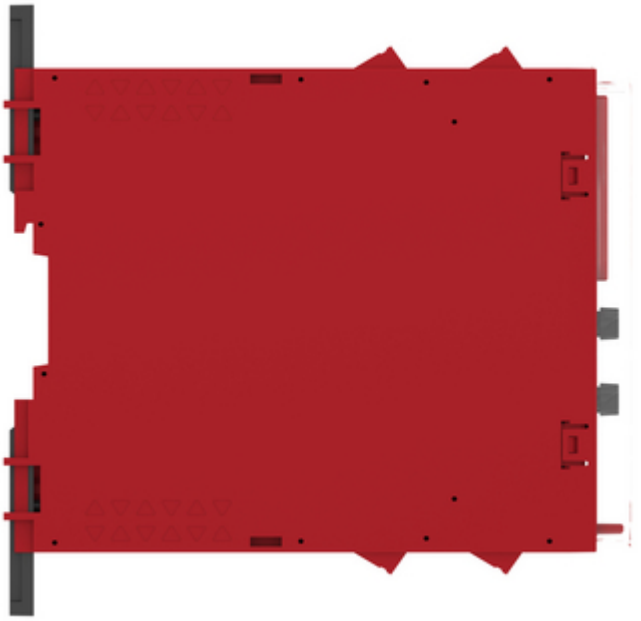

B2 Z1 S21 S22
A2 14 24 S23

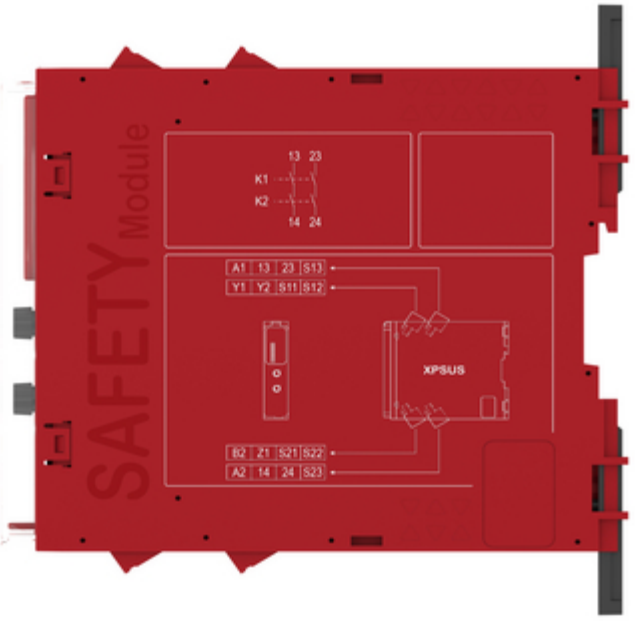
SAFETY Module
13 23
K1
K2
14 24
A1 13 23 S13
Y1 Y2 S11 S12
XPSUS
B2 Z1 S21 S22
A2 14 24 S23

Harmony
POWER
ERROR
STATE
START
S12
S13
S22
S23
START
FUNCTION
Schneider Electric
XPSUS