Product data sheet

Specifications

Pilot light, Harmony XB5, green flush mounted, grey bezel, 30mm, universal LED, plain lens, 230… 240V

XB5FVM3C0

Product availability: Non-Stock - Not normally stocked in distribution facility
Important message: A change in appearance may be noted on the product but does not affect its use in terms of function and safety. This makes it compatible with our Universal LED blocks

Main

Range of Product	Harmony XB5
Product or Component Type	Pilot light
Device short name	XB5F
Bezel material	Plastic colour plated grey
Fixing collar material	Plastic
Head type	Built-in-flush
Mounting diameter	1.2 in (30.5 mm)
Sale per indivisible quantity	1
Shape of signaling unit head	Round
Cap/operator or lens colour	Green
Operator additional information	With plain lens
Light source	Universal LED
Bulb base	Integral LED
Light source colour	Green
[Us] rated supply voltage	230...240 V AC 50/60 Hz
Device presentation	Complete product

Complementary

Height	1.7 in (42 mm)
Width	1.4 in (36.6 mm)
Depth	2.2 in (55 mm)
Terminals description ISO n°1	(X1-X2)PL
Product Weight	0.084 lb(US) (0.038 kg)
Resistance to high pressure washer	1015.3 psi (7000000 Pa) 131 °F (55 °C) 0.1 m
Connections - terminals	Screw clamp terminals, <= 2 x 1.5 mm² with cable end IEC 60947-1 Screw clamp terminals, 1 x 0.22...2 x 2.5 mm² without cable end IEC 60947-1
[Ui] rated insulation voltage	250 V 3)IEC 60947-1
[Uimp] rated impulse withstand voltage	4 kV IEC 60947-1
Signalling type	Steady

Price is “List Price” and may be subject to a trade discount – check with your local distributor or retailer for actual price.

Disclaimer: This documentation is not intended as a substitute for and is not to be used for determining suitability or reliability of these products for specific user applications

GCR BRIDGE	XB5FVCUST05
Supply voltage limits	195…264 V AC
Current Consumption	14 mA
Service life	100000 h at rated voltage and 25 °C
Surge withstand	1 kV IEC 61000-4-5

Environment

Protective treatment	TH
Ambient Air Temperature for Storage	-40…158 °F (-40…70 °C)
Ambient Air Temperature for Operation	-40…158 °F (-40…70 °C)
Overvoltage category	Class II conforming to IEC 60536
IP degree of protection	IP66 IEC 60529 IP67 IEC 60529
Enclosure Type	UL type 4X/13
IK degree of protection	IK03 conforming to IEC 50102
Standards	JIS C8201-5-1 CSA C22.2 No 14 UL 508 IEC 60947-1 IEC 60947-5-4 IEC 60947-5-1 JIS C8201-1
Product Certifications	UL Listed CSA
Vibration resistance	5 gn (f= 12…500 Hz) conforming to IEC 60068-2-6
Shock resistance	50 gn 18 ms) half sine wave acceleration IEC 60068-2-27 30 gn 11 ms) half sine wave acceleration IEC 60068-2-27
Resistance to fast transients	2 kV IEC 61000-4-4
Resistance to electromagnetic fields	9.1 V/m (10 V/m) IEC 61000-4-3
Electromagnetic compatibility	Electrostatic discharge - test level: 6 kV (on contact (on metal parts)) conforming to IEC 61000-4-2 Electrostatic discharge - test level: 8 kV (in free air (in insulating parts)) conforming to IEC 61000-4-2 Electromagnetic emission class B conforming to IEC 55011
Resistance to electrostatic discharge	6 kV on contact (on metal parts) IEC 61000-4-2 8 kV in free air (in insulating parts) IEC 61000-4-2
Electromagnetic emission	Class B IEC 55011

Ordering and shipping details

Category	US10CS222467
Discount Schedule	0CS2
GTIN	3606489761325
Returnability	Yes
Country of origin	FR

Packing Units

Unit Type of Package 1	PCE
Nbr. of units in pkg.	1

Package 1 Height	1.732 in (4.400 cm)
Package 1 Width	2.087 in (5.300 cm)
Package 1 Length	3.661 in (9.300 cm)
Package weight(Lbs)	1.481 oz (42.000 g)

Contractual warranty

Warranty (in months)	18

Environmental Data

Schneider Electric aims to achieve Net Zero status by 2050 through supply chain partnerships, lower impact materials, and circularity via our ongoing “Use Better, Use Longer, Use Again” campaign to extend product lifetimes and recyclability.

Environmental Data explained

How we assess product sustainability

Environmental footprint

Environmental Disclosure	Product Environmental Profile

Use Better

Materials and Substances

Average percentage of recycled plastic content	21 %
Average percentage of recycled metal content	7 %
Packaging made with recycled cardboard	Yes
Packaging without single use plastic	Yes
SCIP Number	3d14fd98-3859-4733-a5ee-a3016769973c
EU RoHS Directive	Compliant By Exemption
REACh Regulation	Reference contains Substances of Very High Concern above the threshold
California proposition 65	WARNING: This product can expose you to chemicals including: Lead and lead compounds, which is known to the State of California to cause cancer and birth defects or other reproductive harm. For more information go to www.P65Warnings.ca.gov

Use Longer

Lifetime extension

Repair	No
Product repairability index	A

Use Again

Repack and remanufacture

Circularity Profile	End of Life Information
Take-back	No
WEEE Label	The product must be disposed on European Union markets following specific waste collection and never end up in rubbish bins.

Dimensions Drawings

Dimensions

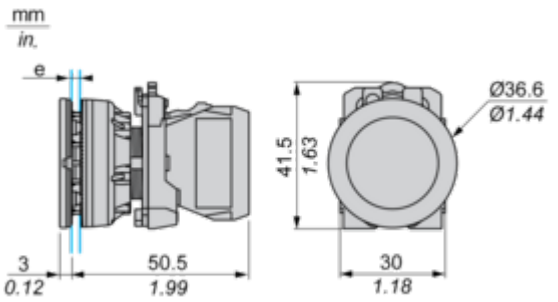

e: Clamping thickness: 1 to 6 mm / 0.04 to 0.24 in.

Mounting and Clearance

Panel Cut-out for Pushbuttons, Switches and Pilot Lights (Finished Holes, Ready for Installation)

Connection by Screw Clamp Terminals or Plug-in Connectors

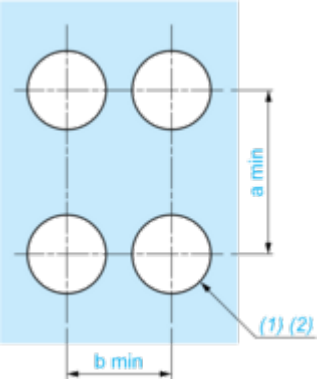

(1) Diameter on finished panel or support

(2) Ø30.75 mm recommended (Ø30.5 $_{0}^{+0.5}$) / Ø1.21 in. recommended (Ø1.20 in. $_{0}^{+0.0196}$)

Connections	a in mm	a in in.	b in mm	b in in.
By screw clamp terminals or plug-in connector	40	1.57	40	1.57
By Faston connectors	45	1.77	40	1.57

Technical Description

Electrical Composition Corresponding to Codes P1, P3, PF1, PR1 and PF2

Light block

Electrical Composition Corresponding to Code P4

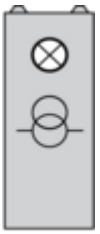

Legend

Single contact

Double contact

Light block

Possible location

Technical Illustration

Dimensions

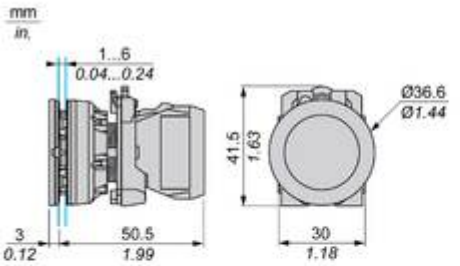

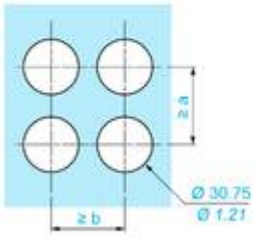

	a (mm)	a (in.)	b (mm)	b (in.)
ZBE●●●●● ZBV●●●●	40	1.57	40	1.57
ZBE●●●●●3 ZBV●●●●3	45	1.77	40	1.57
ZBE●●●●●4 ZBV●●●●4	40	1.57	40	1.57

Image of product / Alternate images

Alternative

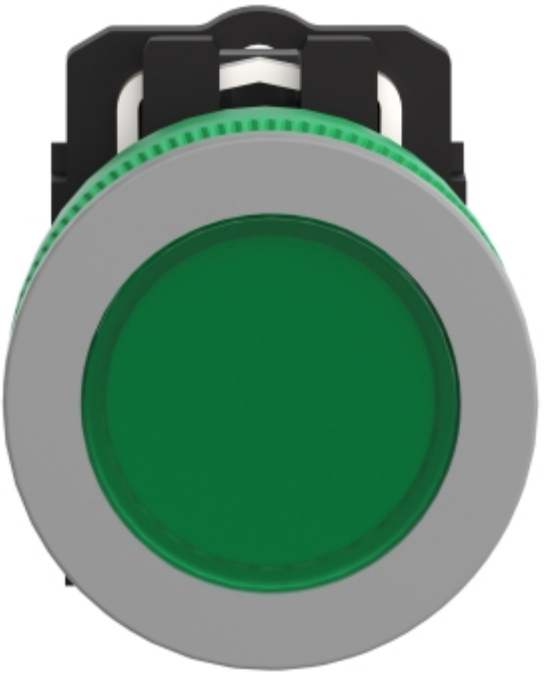

X 1
U N
X 2
XX V