Product data sheet

Specifications

Pilot light, Harmony XB4, metal, white, 22mm, universal LED, plain lens, 24V AC DC, compact push in terminals

XB4BVB15

Product availability: Stock - Normally stocked in distribution facility
Important message: A change in appearance may be noted on the product but does not affect its use in terms of function and safety. This makes it compatible with our Universal LED blocks

Main

Range of Product	Harmony XB4
Product or Component Type	Pilot light
Device short name	XB4
Bezel material	Chromium plated metal
Fixing collar material	Zamak
Mounting diameter	0.9 in (22.5 mm)
Sale per indivisible quantity	1
Shape of signaling unit head	Round
Cap/operator or lens colour	White
Operator additional information	With plain lens
Light source	Universal LED
Bulb base	Integral LED
Light source colour	White
[Us] rated supply voltage	24 V AC/DC 50/60 Hz

Complementary

Height	1.9 in (47 mm)
Width	1.2 in (30 mm)
Depth	1.8 in (45.2 mm)
Terminals description ISO n°1	(X1-X2)PL
Product Weight	0.168 lb(US) (0.076 kg)
Resistance to high pressure washer	1015.3 psi (7000000 Pa) 131 °F (55 °C) 0.1 m
Connections - terminals	Push-in, <= 2 x 1.5 mm² with wire end ferrule IEC 60947-1 Push-in, >= 1 x 0.34 mm² without wire end ferrule IEC 60947-1
[Ui] rated insulation voltage	300 V 3)IEC 60947-1
[Uimp] rated impulse withstand voltage	4 kV IEC 60947-1
Signalling type	Steady
Current Consumption	15 mA
Service life	100000 h at rated voltage and 25 °C

Price is “List Price” and may be subject to a trade discount – check with your local distributor or retailer for actual price.

Disclaimer: This documentation is not intended as a substitute for and is not to be used for determining suitability or reliability of these products for specific user applications

Surge withstand	1 kV IEC 61000-4-5
Device presentation	Complete product
Supply voltage limits	20.4…26.4 V DC 20.4…26.4 V AC

Environment

Protective treatment	TH
Ambient Air Temperature for Storage	-40…158 °F (-40…70 °C)
Ambient Air Temperature for Operation	-40…158 °F (-40…70 °C)
Electrical shock protection class	Class I conforming to IEC 60536
IP degree of protection	IP66 IEC 60529 IP67 IP69 IP69K
Enclosure Type	UL type 4X/13
IK degree of protection	IK06 conforming to IEC 50102
Standards	IEC 60947-1 IEC 60947-5-1 IEC 60947-5-4 IEC 60947-5-5 UL 60947-1 UL 60947-5-1 UL 60947-5-5 UL 1059 UL 486E CSA C22.2 No 60947-1 CSA C22.2 No 60947-5-1 CSA C22.2 No 158 CSA C22.2 No 65 IACS E10
Product Certifications	EAC IECEE CB Scheme CCC UL CSA
Vibration resistance	5 gn (f= 10…500 Hz) conforming to IEC 60068-2-6 25 mm peak to peak (f= 2…10 Hz) conforming to IEC 60068-2-6
Shock resistance	25 gn 6 ms) 1000 shocks on each axis IEC 60068-2-27 30 gn 18 ms) half sine wave acceleration IEC 60068-2-27 50 gn 11 ms) half sine wave acceleration IEC 60068-2-27
Resistance to fast transients	2 kV IEC 61000-4-4
Resistance to electromagnetic fields	9.1 V/m (10 V/m) IEC 61000-4-3
Resistance to electrostatic discharge	4 kV on contact (on metal parts) IEC 61000-4-2 8 kV in free air (in insulating parts) IEC 61000-4-2
Electromagnetic emission	Class B IEC 55011

Ordering and shipping details

Category	US10CS222469
Discount Schedule	0CS2
GTIN	3606480724015
Returnability	Yes
Country of origin	FR

Packing Units

Unit Type of Package 1	PCE
Nbr. of units in pkg.	1
Package 1 Height	1.3 in (3.3 cm)
Package 1 Width	2.05 in (5.2 cm)
Package 1 Length	3.4 in (8.6 cm)
Package weight(Lbs)	2.7 oz (76 g)

Contractual warranty

Warranty (in months)	18

Environmental Data

Schneider Electric aims to achieve Net Zero status by 2050 through supply chain partnerships, lower impact materials, and circularity via our ongoing “Use Better, Use Longer, Use Again” campaign to extend product lifetimes and recyclability.

Environmental Data explained

How we assess product sustainability

Environmental footprint

Total lifecycle Carbon footprint	**17 kg CO2 eq.**
Carbon footprint of the manufacturing phase [A1 to A3]	**0.6 kg CO2 eq.**
Carbon footprint of the distribution phase [A4]	**0 kg CO2 eq.**
Carbon footprint of the installation phase [A5]	**0 kg CO2 eq.**
Carbon footprint of the use phase [B2, B3, B4, B6]	**17 kg CO2 eq.**
Carbon footprint of the end-of-life phase [C1 to C4]	**0.1 kg CO2 eq.**

Use Better

Materials and Substances

Average percentage of recycled plastic content	**36 %**
Average percentage of recycled metal content	**17 %**
Packaging made with recycled cardboard	**Yes**
Packaging without single use plastic	**Yes**
SCIP Number	**3d14fd98-3859-4733-a5ee-a3016769973c**
EU RoHS Directive	**Compliant By Exemption**
REACh Regulation	**Reference contains Substances of Very High Concern above the threshold**
California proposition 65	**WARNING: This product can expose you to chemicals including: Lead and lead compounds, which is known to the State of California to cause cancer and birth defects or other reproductive harm. For more information go to www.P65Warnings.ca.gov**

Use Longer

Lifetime extension

Repair	**No**
Product repairability index	**A**

Use Again

Repack and remanufacture

Recyclability potential, in %	**32**
Circularity Profile	**End of Life Information**
Take-back	**No**

Dimensions Drawings

Dimensions

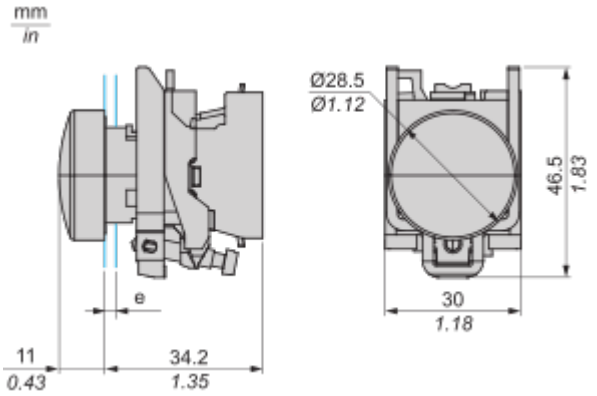

e : Clamping thickness: 1 to 6 mm / 0.04 to 0.24 in.

Mounting and Clearance

Mounting

Mounting and Unmounting

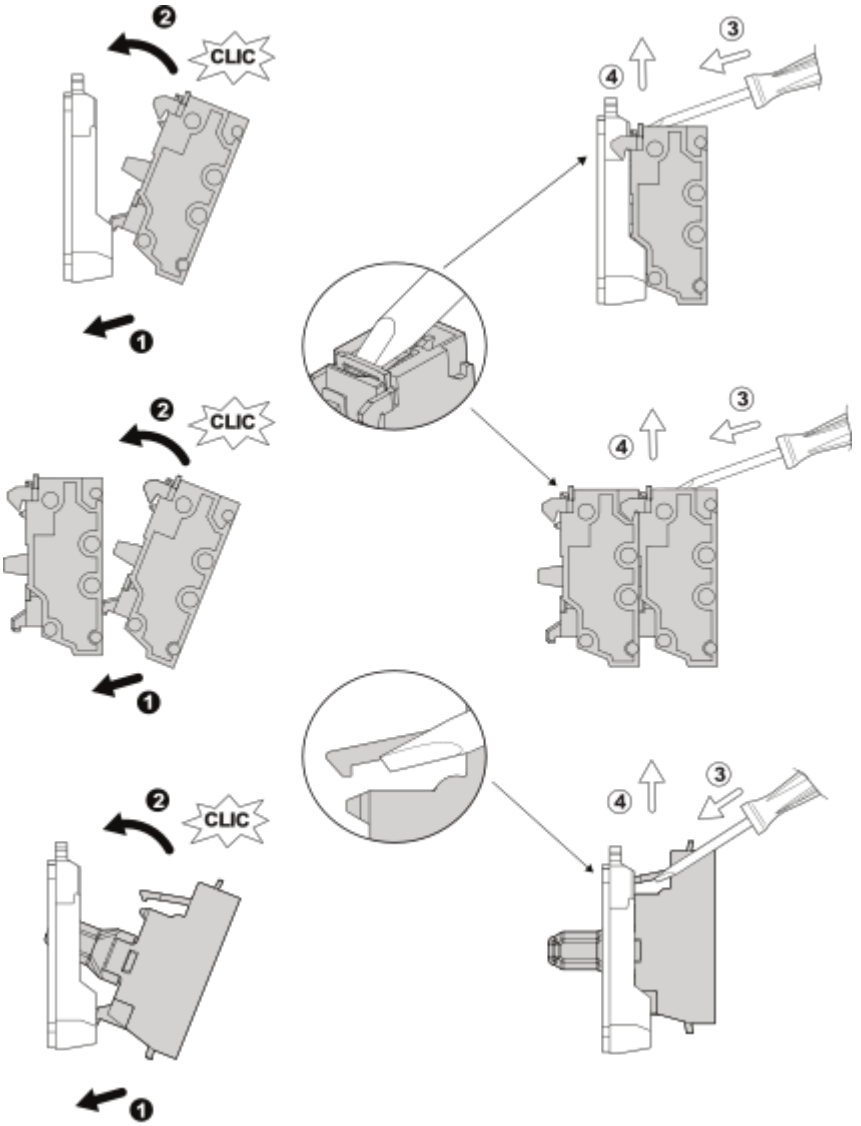

Panel cut-out Dimension

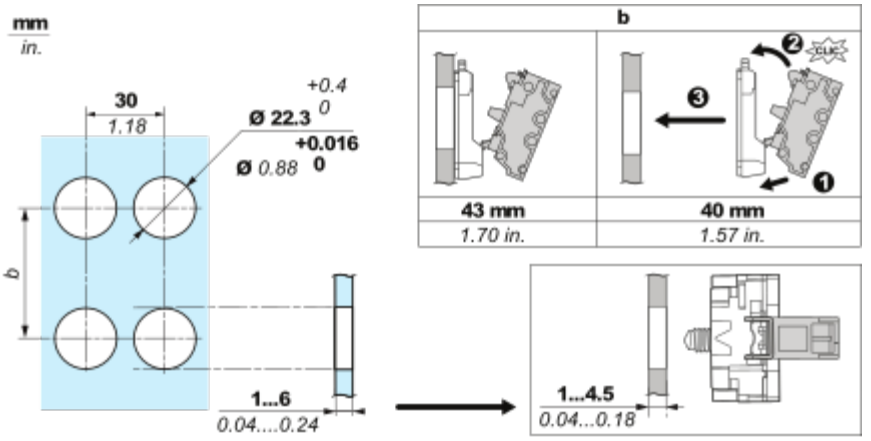
mm
in.
30
1.18
Ø 22.3 +0.4 0
Ø 0.88 +0.016 0
b
1...6
0.04....0.24
b
43 mm
1.70 in.
40 mm
1.57 in.
1...4.5
0.04...0.18

Connections and Schema

Wiring

Wiring and Unwiring

mm in.	8 0.32
mm² AWG	0.34...1.5 22...16

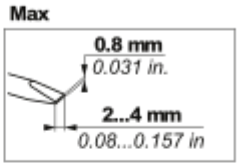

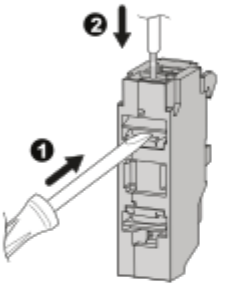

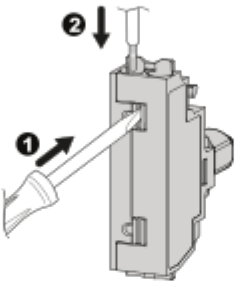

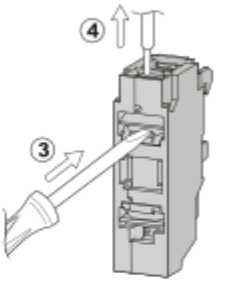

mm in.	8 0.32	8 0.32 (1)		8 0.32 (1)
mm² AWG	0.34...1.5 22...16	0.34...1 22...18	0.34...1.5 22...16	0.34...1.5 22...16

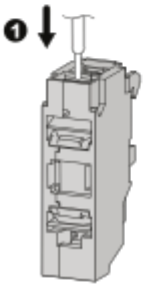

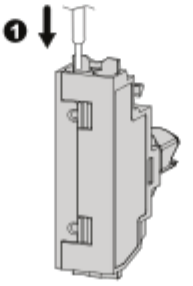

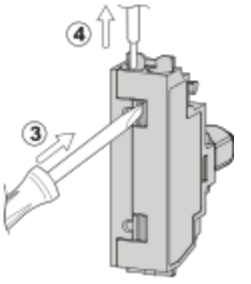

Technical Illustration

Dimensions

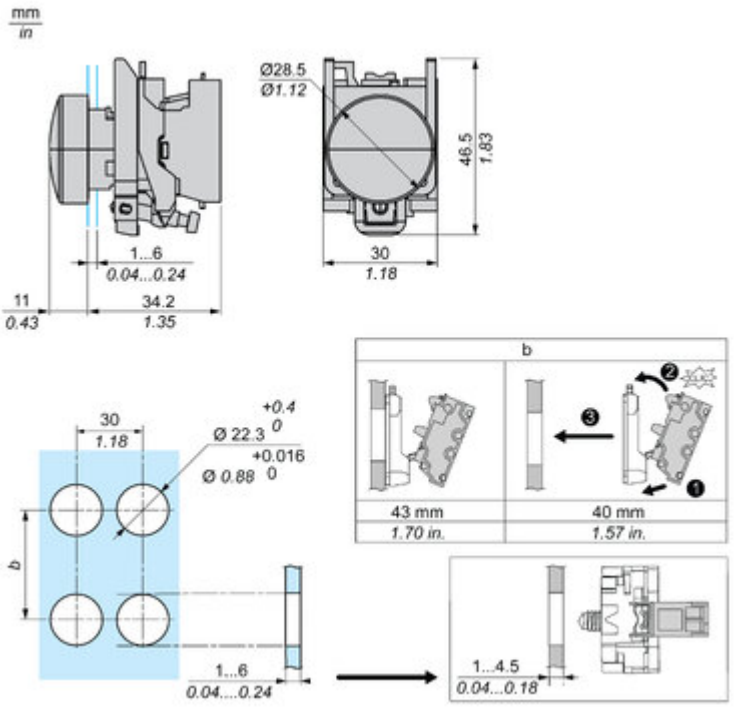

Technical Illustration

Wiring diagram

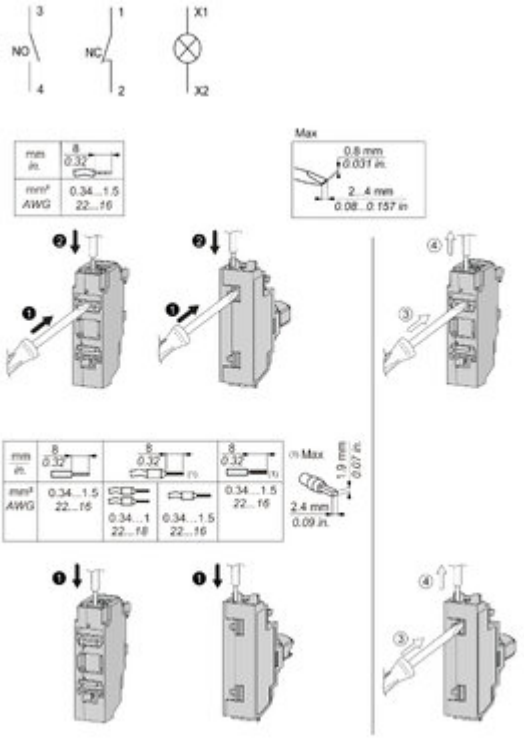

Offer Marketing Illustration

Product benefits / Features

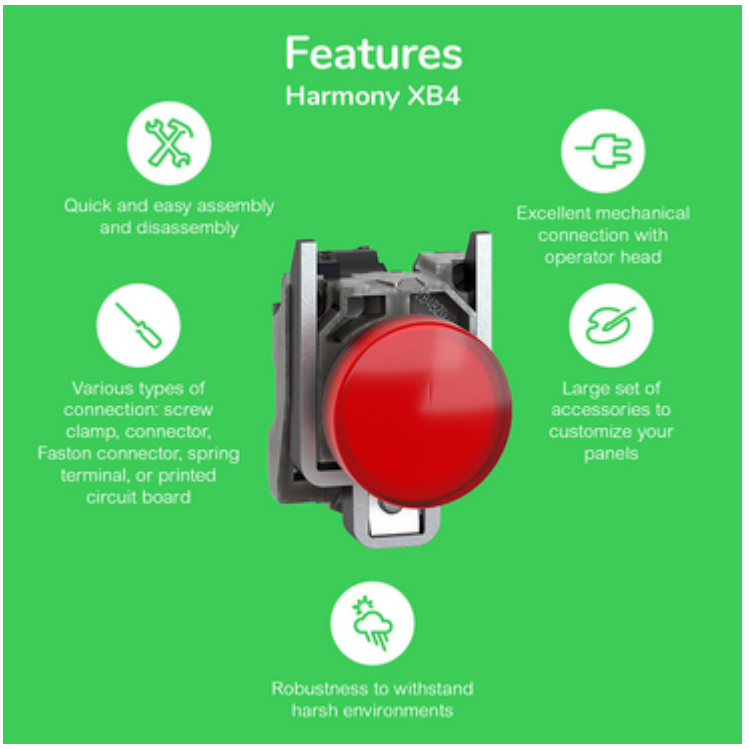

Offer Marketing Illustration

Product benefits / Features

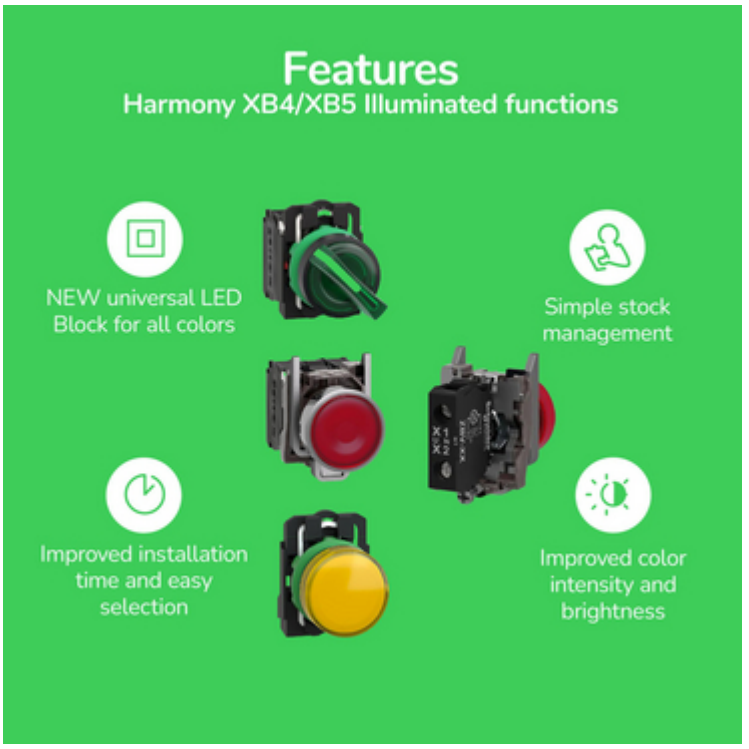

Offer Marketing Illustration

Product benefits / Features

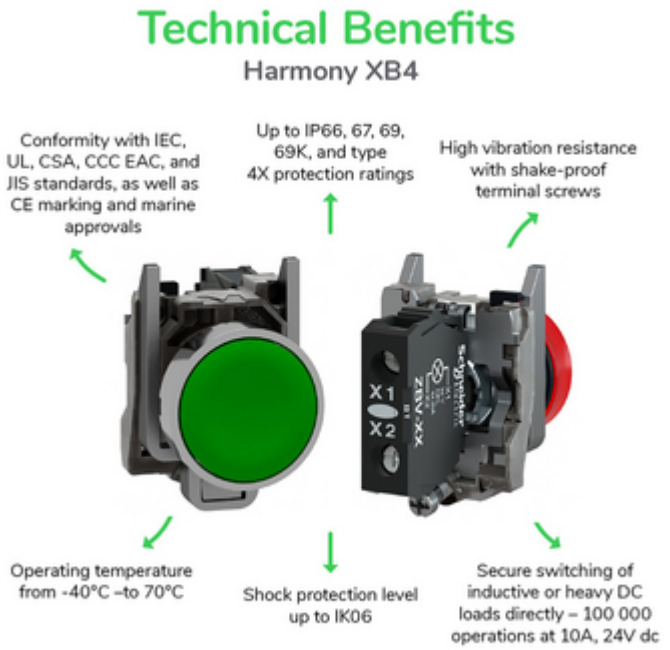

Image of product / Alternate images

Alternative

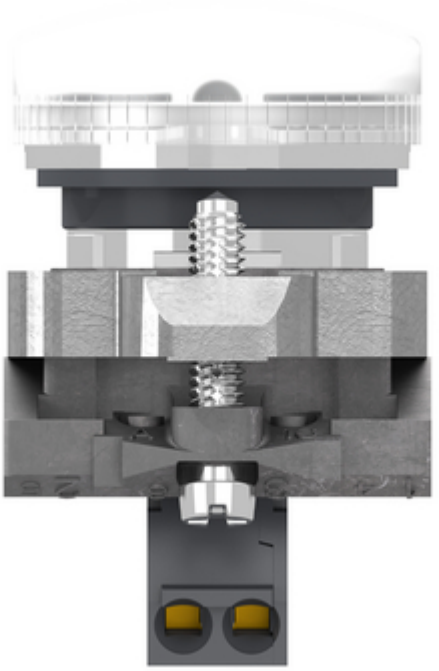

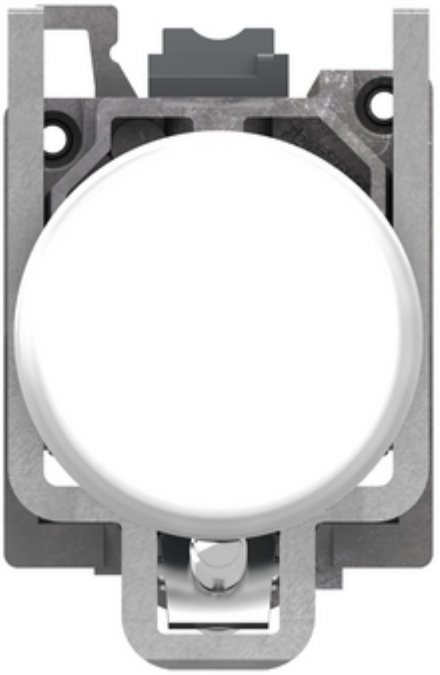

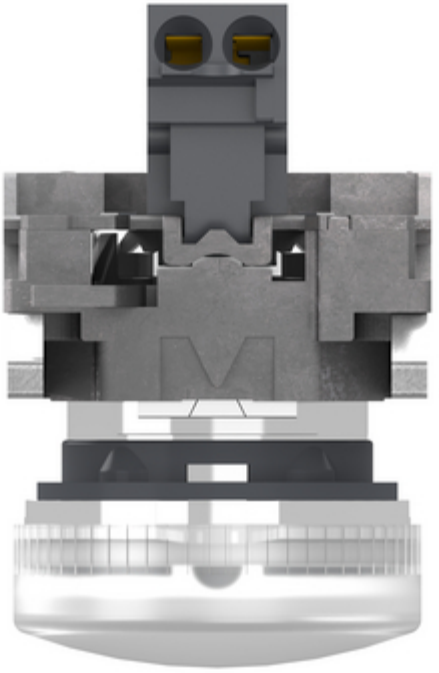

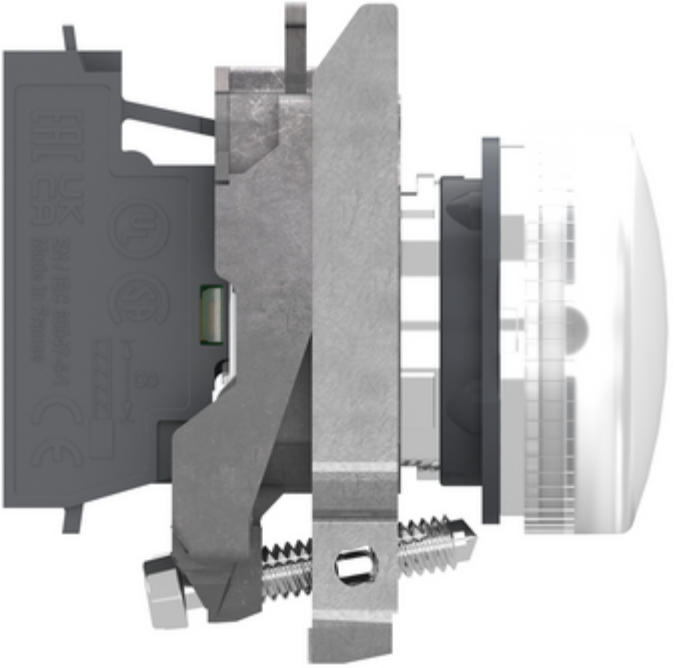

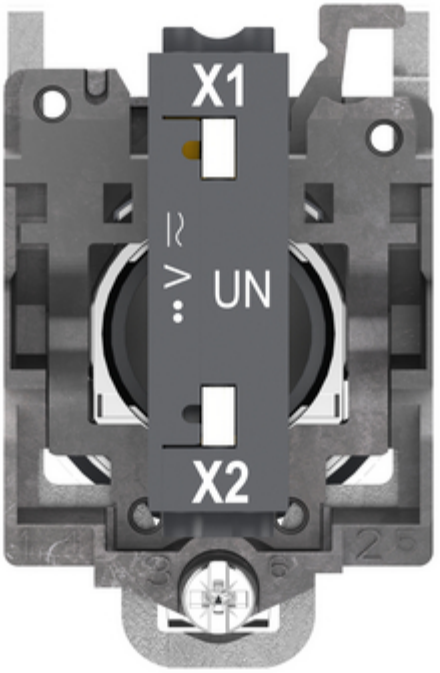
X1
UN
X2

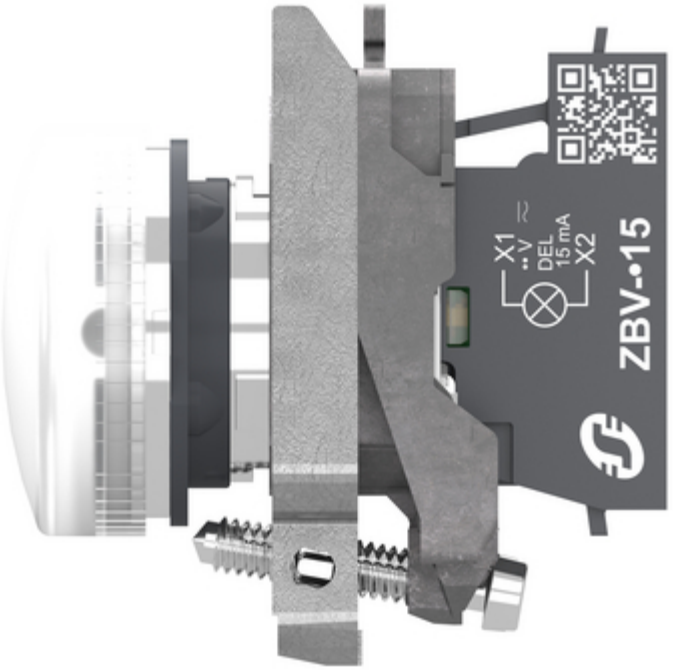
X1
DEL
15 mA
X2
ZBV-•15