Product data sheet

Specifications

Empty control station without hinges, Harmony XAP, XB2 SL, plastic, grey, 4 cut outs, 22mm

XAPA1104

Product availability: Non-Stock - Not normally stocked in distribution facility

Main

Range of Product	Harmony XAP
Product or Component Type	Empty control station without hinges
Device short name	XAPA
Product destination	For Ø 22 mm control and signalling units
Product front plate size	85 x 146 mm
Usable depth	3.3 in (83 mm)
Number of cut-out	4 cut-outs
Colour of base of enclosure	Grey
Colour of cover	Grey
Material	Glass reinforced polyester
Cable entry	Undrilled
Device mounting	Flush
IP degree of protection	IP65 IEC 60529 IP69 NF C 20-010 IP69K
Resistance to chemical agents	High resistant to acids High resistant to all solvents High resistant to bases High resistant to diesel High resistant to mineral salts High resistant to oils and greases High resistant to petrol High resistant to sea water

Complementary

Number of vertical rows	2
Flame retardance	M3 conforming to CSTB VO conforming to UL 94
Product Weight	1.04 lb(US) (0.47 kg)

Environment

Protective treatment	TH TC
Ambient Air Temperature for Storage	-40…158 °F (-40…70 °C)
Ambient Air Temperature for Operation	-40…158 °F (-40…70 °C)
Overvoltage category	Class II conforming to IEC 60536 Class II conforming to NF C 20-030

Price is “List Price” and may be subject to a trade discount – check with your local distributor or retailer for actual price.

Disclaimer: This documentation is not intended as a substitute for and is not to be used for determining suitability or reliability of these products for specific user applications

Fire resistance	1562 °F (850 °C) NF C 20-455 1760 °F (960 °C) IEC 92

Ordering and shipping details

Category	US10CS222475
Discount Schedule	0CS2
GTIN	3389110313192
Returnability	Yes
Country of origin	FR

Packing Units

Unit Type of Package 1	PCE
Nbr. of units in pkg.	1
Package 1 Height	5.118 in (13.000 cm)
Package 1 Width	3.543 in (9.000 cm)
Package 1 Length	6.181 in (15.700 cm)
Package weight(Lbs)	17.637 oz (500.000 g)
Unit Type of Package 2	S03
Number of Units in Package 2	12
Package 2 Height	11.811 in (30.000 cm)
Package 2 Width	11.811 in (30.000 cm)
Package 2 Length	15.748 in (40.000 cm)
Package 2 Weight	14.323 lb(US) (6.497 kg)
Unit Type of Package 3	P06
Number of Units in Package 3	96
Package 3 Height	29.528 in (75.000 cm)
Package 3 Width	23.622 in (60.000 cm)
Package 3 Length	31.496 in (80.000 cm)
Package 3 Weight	135.655 lb(US) (61.532 kg)

Contractual warranty

Warranty (in months)	18

Environmental Data

Schneider Electric aims to achieve Net Zero status by 2050 through supply chain partnerships, lower impact materials, and circularity via our ongoing “Use Better, Use Longer, Use Again” campaign to extend product lifetimes and recyclability.

Environmental Data explained >

How we assess product sustainability >

Environmental footprint

Total lifecycle Carbon footprint	**3 kg CO2 eq.**
Carbon footprint of the manufacturing phase [A1 to A3]	**2 kg CO2 eq.**
Carbon footprint of the distribution phase [A4]	**0.1 kg CO2 eq.**
Carbon footprint of the installation phase [A5]	**0.4 kg CO2 eq.**
Carbon footprint of the use phase [B2, B3, B4, B6]	**0 kg CO2 eq.**
Carbon footprint of the end-of-life phase [C1 to C4]	**0.1 kg CO2 eq.**
Environmental Disclosure	**Product Environmental Profile**

Use Better

Materials and Substances

Packaging made with recycled cardboard	**Yes**
Packaging without single use plastic	**Yes**
EU RoHS Directive	**Compliant**
REACh Regulation	**Free of Substances of Very High Concern above the threshold**
California proposition 65	**WARNING: This product can expose you to chemicals including: Di-isodecyl phthalate (DIDP), which is known to the State of California to cause birth defects or other reproductive harm. For more information go to www.P65Warnings.ca.gov**

Use Longer

Lifetime extension

Repair	**No**

Use Again

Repack and remanufacture

Recyclability potential, in %	**98**
Circularity Profile	**No need of specific recycling operations**
Take-back	**No**

Dimensions Drawings

Dimensions and Fixing

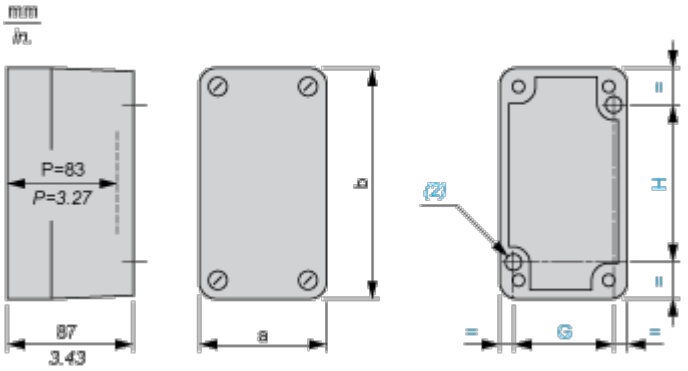

(2) 2 x Ø 5.6 mm/0.22 in. holes, depth 12 mm/0.47 in.

P Usable depth

a		b		G		H	
mm	in.	mm	in.	mm	in.	mm	in.
85	3.35	146	5.75	70	2.76	105	4.13

Refer to the product characteristics to get the number of cut-outs.

Cut-out interaxis dimensions (vertical mounting)

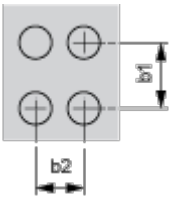

b1 Vertical interaxis: 40 mm/1.57 in.

b2 Horizontal interaxis: 30 mm/1.18 in.

Image of product / Alternate images

Alternative

>UP<