Catalog | April 2023

Altivar Process ATV900

Variable speed drives

www.se.com

Life Is On | Schneider Electric

Quick access to product information

Get technical information about your product

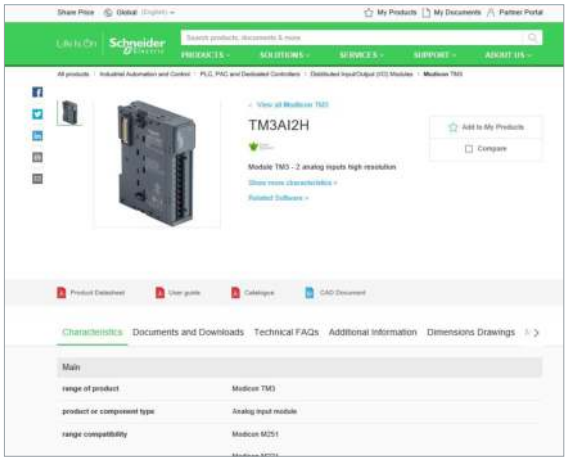

Each commercial reference presented in a catalog contains a hyperlink. Click on it to obtain the technical information of the product:

- Characteristics, Dimensions and drawings, Mounting and clearance, Connections and schemas, Performance curves
- Product image, Instruction sheet, User guide, Product certifications, End of life manual

Find your catalog

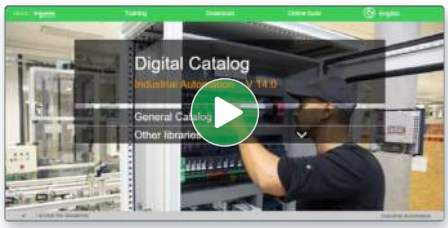

> With just 3 clicks, you can access the Industrial Automation and Control catalogs, in both English and French
> Consult digital automation catalogs at Digi-Cat Online

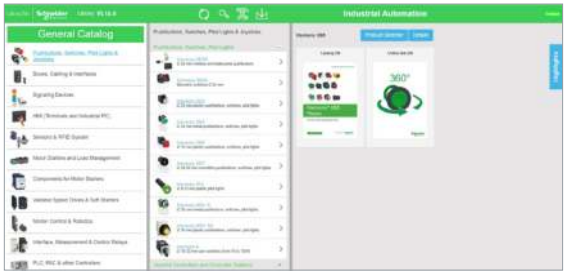

- Up-to-date catalogs
- Embedded product selectors,360° pictures
- Optimized search by commercial references

Select your training

> Find the right Training for your needs on our Global website
> Locate the training center with the selector tool, using this link

Life Is On | Schneider Electric

Altivar

Discover Altivar

Variable speed drives and soft starters

Altivar variable speed drives and soft starters deliver top performance in motor control applications across machines, processes, and buildings. With built-in intelligence, these smart connected devices gather and share data to improve operational efficiency, safety, and reliability.

Explore our offer

- Altivar Process
- Altivar Machine
- Altivar Building
- Altivar Soft Starters

Life Is On | Schneider Electric

Green Premium™

Enhance sustainability with Altivar™ Process drives

Superior environmental performance thanks to upgradability and modernization solutions.

Altivar Process is **RoHS** and **REACH** compliant
- Transparent environment information
- Life Cycle Analysis, compliant with ISO14025
- Circular instructions

Altivar Process drives brings key benefits to our end users in achieving superior sustainable performance by enhancing its functionality, performance of capacity, for both, hardware and software.

The additional hardware options and the firmware upgradability capabilities of the Altivar process help our customers to maximize the process continuity and operation, as well as reducing the operational expenses, by avoiding the change of their drive or the modification of the existing installation, as a retrofit.

Benefits

- Maximize process continuity and operation
- Reduce your OPEX
- Easy scalability of your Automation system
- Future-ready solution for Industry 4.0
- Improve power quality of your system with a low investment
- Improve the safety, integration, and performance of your application
- Optimize your maintenance cost and the Drives Lifetime

...SUSTAINABILITY READY

Green Premium™ Sustainable performance, by design

Communication & Wi Fi Modules

The additional communication modules allow our customers to easily integrate Altivar Process drives in their scalable Automation system. Together with the Wi Fi access point, brings easy access to the real data provided by the drive, helping the digitalization and the easy integration of the drive in the Industry 4 0 technologies.

Passive Filters*

The optional passive filter of the Altivar Process brings to customers the possibility to improve their installation's power quality by reducing the harmonics levels, even keeping their existing drives installed.

Additional I/O & Safety modules*

The additional I/O and the safety modules help our customers to extend the performance and integration of their application, enhancing at the same time the operators' and machines' safeness.

Firmware Update & Service expertise

Thanks to our global network of service experts, our customers have the possibility of upgrading the Drive's firmware and modernizing its hardware to extend the Drives lifetime.

Experience the difference today at

se.com/green-premium

* For more information regarding the compatibility of these options, please visit us in se.com/drives

General contents

Presentation 1

Drive products 2

Drives for integration. 3

Drive Systems 4

Drives Field Services, index 5

EcoStruxure™
Innovation At Every Level

Schneider Electric's IoT-enabled, plug-and-play, open, secure, interoperable architecture and platform, in Industries, Infrastructures, Data Centers, and Buildings.

Innovation at every level

EcoStruxure is based on a three-tiered technology stack delivering innovation at every level, from connected products to edge control and apps, analytics, and services.

Together with our hybrid segments approach, this enhances your value around safety, reliability, operational efficiency, sustainability, and connectivity across 6 domains of expertise:

- Power
- IT
- Building
- Machine
- Plant
- Grid

Dedicated architectures and IoT

We tailor our solutions in the form of dedicated reference architectures for plants:

- Management systems
- Power systems
- Data center systems
- Industrial plant and machine systems
- Smart grid systems

The Industrial Internet of Things (IIoT) gives an additional boost to technologies. That's why we provide our customers with an IoT-enabled architecture and platform offering simple, reliable, productive, and cost-efficient solutions.

Cybersecurity solutions

Robust cybersecurity protection is a must, and Schneider Electric's solutions can deliver it, regardless of business type or industry.

The vendor-agnostic services provided by our skilled professionals help to protect your entire critical infrastructure. We help to assess your risk, implement cyber-specific solutions, and maintain your onsite defenses over time, while integrating appropriate IT policies and requirements.

This is our difference and your advantage.

Enhanced safety

With the release of M580 Safety, Schneider Electric further expands the EcoStruxure platform.

This consolidates our position as one of the most trusted industrial safety vendor, with thousands of Modicon and Triconex safety systems protecting the most critical industrial processes globally.

EcoStruxure™ Innovation At Every Level for Industry

*The Schneider Electric industrial software business and AVEVA have merged to trade as AVEVA Group plc, a UK listed company. The Schneider Electric and Life is On trademarks are owned by Schneider Electric and are being licensed to AVEVA by Schneider Electric.

Contents

1 - Presentation

■ **General presentation** ..... *page 1/2*

Wall-mounting and floor-standing drives selection guide ..... *page 1/6*

Drives for integration selection guide ..... *page 1/8*

Drive Systems selection guide ..... *page 1/10*

■ **Altivar Process variable speed drives presentation** ..... *page 1/11*

Variable speed drives

Altivar Process

Process efficiency, real-time intelligence

Altivar Process

Provides the efficiency you deserve

Altivar Process is the new comprehensive range of variable speed drives from Schneider Electric, covering the majority of industrial applications with two series:

> ATV600: drives focused on fluid management and processing and energy saving

> ATV900: drives focused on maximum productivity with exceptional motor control and connectivity

Depending on customer requirements, Altivar Process drives are available as wall-mounting, floor-standing, and optimized solutions for integration in cabinets.

Wall-mounting drives
from 0.75 kW up to 315 kW
(1...500 HP)

Enclosed drive solutions
from 0.75 kWup to 2,600 kW
(1...2,600 HP)

Drives for cabinet integration
from 0.75 kW up to 2,600 kW
(1...2,600 HP)

Altivar Process range

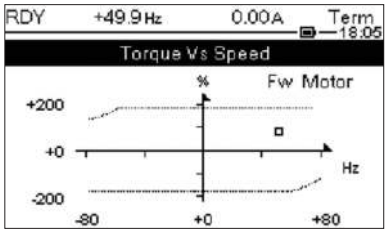

Torque Vs Speed display

Process efficiency

Motor performance and connectivity

> Excellent motor performance on any type of motor

> Ethernet dual port offers maximum services such as connection to the control room and process transparency

> Network service helps ensure operation continuity even in case of connection breakdown

> Web server and data logging help reduce downtime through fast troubleshooting and preventive maintenance

Complete control of your applications

> Maximize your application performance by using drive-to-drive communication: total control of any kind of coupling in master/slave applications

> Total management and flexibility of speed and torque on rigid and elastic coupling

> Asset monitoring functions to increase production and reduce downtime

Calculate your level of energy efficiency with the Altivar Efficiency Calculator

Altivar Efficiency Calculator

This tool calculates the level of energy efficiency of your variable speed drive according to the Ecodesign standard EN/IEC 61800-9-2.

> **Drive Efficiency (CDM Complete Drive Module)**
Drive performance is determined according to 8 operating points considering torque and speed

> **System Efficiency (PDS Power Drive System)**
System performance is determined according to 8 operating points considering torque and speed. This includes the efficiency of the variable speed drive and its motor.

Variable speed drives
Altivar Process
User-friendliness, green product

Configure your Altivar drive with the EcoStruxure™ Motor Control Configurator

Real-time intelligence
Web server and services via Ethernet

- Embedded Web server interface based on the Ethernet network gives you process monitoring with your daily working tools.
- Local and remote access to energy use and customized dashboards means your energy is visible anywhere, any time, on PC, tablet, or smartphone.

EtherNet/IP ODVA
ODVA organization: Supports network technologies based on EtherNet/IP

FDT Technology: A widely-accepted international standard in the automation industry

User-friendliness
Simple integration in PLC environments

- Easy integration thanks to standardized FDT/DTM and ODVA technology
- Supported by predefined EcoStruxure Control Expert libraries
- Easy access via PC, tablet, or smartphone
- Robust connection via Ethernet

Achilles™ Level 2 certified

Security

Scanning the QR code from a smartphone or tablet

Instant access to online help

Sophisticated service concept

- Modular design provides easy spare parts logistics
- Optimized maintenance costs due to dynamic maintenance schedule, with integrated monitoring of individual components
- Simple exchange of power modules and fans
- Quick assistance with dynamic QR codes and Customer Care App

Green Premium™ Product

Green product
Designed to have a smaller carbon footprint

- The Green Premium product label, Schneider Electric's eco-mark, indicates your compliance with international environmental standards such as:
  - RoHS according to European Directive 2011/65 and the delegated Directive (EU) 2015/863
  - REACH according to EU regulation 1907/2006
  - IEC 62635: The end-of-life instructions comply with the latest recycling rules, up to 85% of the product components can be recycled.

+ Best in class service concept

Variable speed drives

Altivar Process ATV900
Adaptive Cascade Vector Control

Adaptive
Cascade
Vector
Control

Altivar™

Adaptive Cascade Vector Control

New Motor Control method

ACVC provides better **torque accuracy** and **dynamic response**, it improves dynamic trajectory following and power consumption efficiency.
It enables:

- Improvement of torque limitation
- Precise torque control
- Smooth torque output
- Stable torque performance
- Faster the steady state, regardless the load
- Great torque performance in high speed
- Wider Speed/torque operation range

ACVC is improving all kinds of asynchronous motor applications

Energy
Efficiency

3 steps for improvements

New algorism enhancing the torque control

Mathematical improvement on torque control, motor fluxing and motor nonlinear model (including magnetic saturation).

Tune in Rotation by User commissioning

Enhance electrical control on field weakening and inductance online adaptation.

Cascade control by separated time scales

Different sampling time, optimizing the output performance and access better inductance in function of the rotor flux.

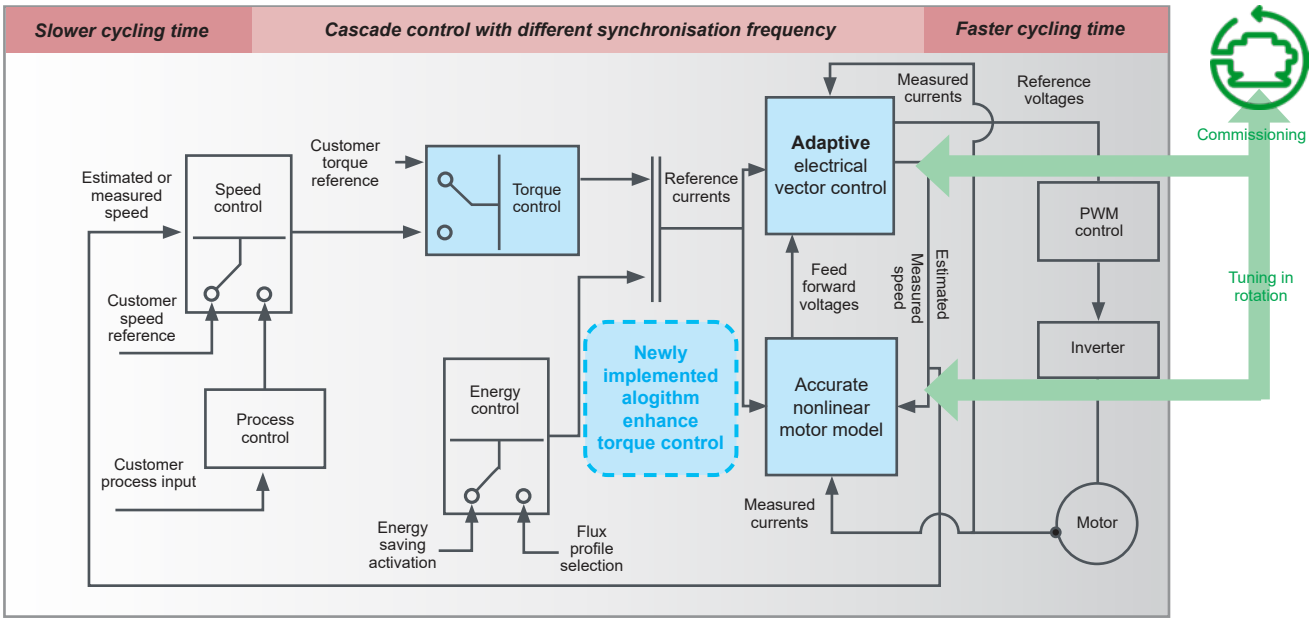

*Control mechanism with patent involved.

Variable speed drives

Altivar Process ATV900
Adaptive Cascade Vector Control

Graphic display shows the improvement byTorque & Speed curve

Customer values

Torque acuracy

Up to 0.5% of nominal torque error rate and improve 25 percentage points accuracy versus traditional control methods.

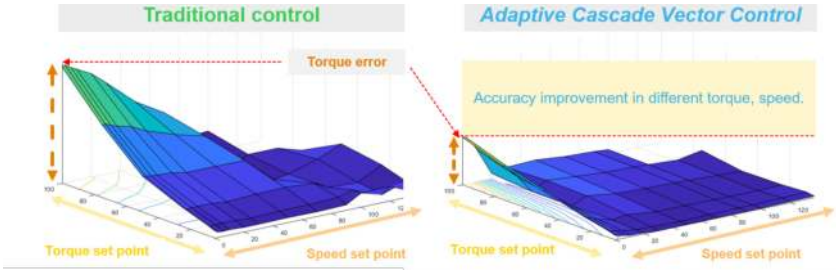

Reduce overall CAPEX and Material Cost :

- Improve manufacturing quality by ~ 5% on final products
- Reduce loss of raw material by ~5% during production
- Reduce installation cost by ~10% by decreasing the amount of additional torque sensor or additional controllers

Reduce overall OPEX and potential Maintainance :

- Less mechanical vibration damage on machines by smooth control and controllable response behavior
- Gain more energy saving by stable output from the motor to mechanical system
- Extend lifetime of mechanical parts, decrease OPEX and service cost

Altivar 340 range up to 75 kW

Dynamic Response

Rising time can be lower than 1ms, which is up to 40 % better than traditional control methods. It features:

- Optimized machine dynamic performance, for applications such as Material handling, Material working and crushing process that are requiring faster response.
- Improve manufacturing process efficiency and flexibility, it will be more adaptable within manufacturing process.
- Even in the field-weakening area, it can increase productivity on the machine, no need to increase size of drives and related system.
- Higher speed operational range provide machine builders more possibility.
- It can optimize machines without additional investment, and bring more options for OEM customers in their own product lines.

Altivar 900 range from 0.75 kW up to 2.6 MW

Variable speed drives

Altivar Process ATV900

Wall-mounting and floor-standing drives

Market segments		■ **Oil & gas** ■ **Mining, minerals & metals** ■ **Consumer packaged goods (CPG)** ■ **Water & wastewater**					
Mounting type		Wall-mounting				Floor-standing	
Degree of protection		IP20 and IP21/UL Type 1	IP21/UL Type 1 without braking unit	IP55	IP55 with Vario disconnect switch	IP21 without braking unit	IP54 with disconnect switch and without braking unit
Power range for 50...60 Hz line supply *(1)*	Three-phase: 200...240 V (kW/*HP*)	0.75...45/*1...60*	30...75/*40...100*	–	–	–	–
	Three-phase: 380...440 V (kW)	–	–	–	–	110...315	110...315
	Three-phase: 380...480 V (kW/*HP*)	0.75..220/*1...350*	55...315/*75...500*	0.75...90/*1...125*	0.75...90/*1...125*	–	–
	Three-phase: 500...690 V (kW/*HP*)	1.5...75/*2...100*	–	–	–	–	–
Drive	Output frequency	0.1...599 Hz					
	Control type: Asynchronous motor	Standard constant torque, optimized torque mode					
	Control type: Synchronous motor	PM (permanent magnet) motor, synchronous reluctance motor					
Functions	Advanced functions	■ High-performance motor control with an overload torque up to 180% Tn in an open or closed loop ■ Asynchronous, synchronous, special motors: all efficiency classes, brand independent, permanent magnet motors, torque motors, conical sliding rotor, reluctance motor ■ Integrated EtherNet/IP and Modbus TCP dual port, cybersecurity (Achilles Level 2) ■ Smart integration in PlantStruxure and Foxboro Evo process automation systems ■ Optimized energy efficiency, detection of energy consumption drift of the installation ■ Adaptation to the process by dedicated functions with modular design ■ Embedded safety functions STO SIL3 ■ Master/slave and load sharing with drive-to-drive capability: □ torque sharing on rigid coupling □ torque sharing on elastic coupling ■ Contextual access to technical documentation through dynamic QR code ■ Continuous and historical real-time measurements with customizable dashboards ■ Predictive maintenance (e.g. temperature with PT100/1000 probe, fan monitoring, etc.)					
	Integrated safety function	1: STO (Safe Torque Off) SIL3					
	Number of preset speeds	16					
Number of integrated I/O	Analog inputs	3: 2 configurable as voltage (0...10 V) or current (0-20 mA/4-20 mA), including probes (PTC, PT100, PT1000, or KTY84), and 1 configurable as (0...±10 V)					
	Digital inputs	8: Voltage 24 V ⎓ (positive or negative logic)					
	Digital output	1: Assignable can be used as pulse train output (PTO)					
	Analog outputs	2: Configurable as voltage (0...10 V) or current (0-20 mA)					
	Relay outputs	3: 1 with NO/NC contacts and 2 with NO contacts					
	Safety function inputs	2: For safety function STO					
Extended I/O module (optional)	Analog inputs	2 differential analog inputs configurable via software as current (0-20 mA/ 4-20 mA), or for PTC, PT100 or PT1000, 2 or 3-wire probes					
	Digital inputs	6: Voltage 24 V ⎓ (positive or negative logic)					
	Digital outputs	2: Assignable					
Extended relay module (optional)	Relay outputs	3: NO contacts					
Communication	Integrated	EtherNet/IP and Modbus/TCP dual port, Modbus serial link					
	Option modules	CANopen RJ45 daisy chain, SUB-D, and screw terminal block, PROFINET, PROFIBUS DP V1, DeviceNet, EtherCAT, and POWERLINK					
Configuration and runtime tools		Graphic display terminal, embedded Web server, DTM (Device Type Manager), SoMove software					
Standards and certifications		UL 508C and UL61800-5-1 *(2)*, EN/IEC 61800-3, EN/IEC 61800-3 environment 1 category C2, EN/IEC 61800-3 environment 2 category C3, EN/IEC 61800-5-1, IEC 61000-3-12, IEC 60721-3, IEC 61508 *(3)*, IEC 13849-1, REACH, SEMI F47-0706, ATEX 2/22, ATEX 1/21				EN/IEC 61800-3, EN/IEC 61800-3 environment 2 category C3, EN/IEC 61800-5-1, IEC 60721-3,IEC 61508 *(3)*, ATEX 2/22, ATEX 1/21	
References		**ATV930●●●●●**	**ATV930●●●●●C**	**ATV950●●●●●**	**ATV950●●●●●E**	**ATV930●●●●●F**	**ATV950●●●●●F**
Page		2/4		2/7	2/8	2/10	2/11

(1) In "Normal duty", power values are given for applications requiring a slight overload (up to 120%). For power values in "Heavy duty" applications requiring a significant overload (up to 150%), see page 2/2.
(2) Evaluated UL standards may differ per drive reference. Please refer to our website for more details.
(3) For marine product certificate please contact your Schneider Electric representative.

More technical Information on www.se.com

Variable speed drives

Altivar Process ATV900

Drives for integration

Market segments		■ **Oil & gas** ■ **Mining, minerals & metals** ■ **Consumer packaged goods (CPG)** ■ **Water & wastewater**		■ **Water & wastewater** ■ **Oil & gas** ■ **Mining, minerals & metals**
Mounting type		Cabinet integration			
Drive type		Drive products for cabinet integration	Modular Standard drives	Modular Low Harmonic/Regen drives	Modular Liquid-cooled drives
Degree of protection		IP20	IP00		
Power range for 50...60 Hz line supply	Three phase: 380…480 V (kW/*HP*)	0.75...90/*1...120*	–		–
	Three-phase: 400 V (kW)	–	110...1000		110...1800
	Three-phase: 440 V (kW)	–	110...1000		110...1800
	Three-phase: 480 V (*HP*)	–	150...1400		150...2500
	Three-phase: 500 (kW)	–	75...800		110...1900
	Three-phase: 600 (*HP*)	–	125…1200		150...2600
	Three-phase: 690 (kW)	–	110…1200		160...2600
Drive	Output frequency	0.1...599 Hz			
	Control type Asynchronous motor	Standard constant torque, variable standard torque, optimized torque mode			
	Synchronous motor	PM (permanent magnet) motor, synchronous reluctance motor			
Functions	Advanced functions	Including all the advanced features of ATV900 drives: ■ High-performance motor control with an overload torque up to 180% Tn in an open or closed loop ■ Asynchronous, synchronous, special motors: all efficiency classes, brand independent, permanent magnet motors, torque motors, conical sliding rotor, reluctance motor ■ Integrated EtherNet/IP and Modbus TCP dual port, cybersecurity (Achilles Level 2) ■ Smart integration in PlantStruxure and Foxboro Evo process automation systems ■ Optimized energy efficiency, detection of energy consumption drift of the installation ■ Adaptation to the process by dedicated functions with modular design ■ Embedded safety functions STO SIL3 ■ Master/slave and load sharing with drive-to-drive capability: □ torque sharing on rigid coupling □ torque sharing on elastic coupling ■ Contextual access to technical documentation through dynamic QR code ■ Continuous and historical real-time measurements with customizable dashboards ■ Predictive maintenance (e.g. temperature with PT100/1000 probe, fan monitoring, etc.) ■ Easy setting of drive identification			
	Integrated safety function	1: STO (Safe Torque Off) SIL3			
	Number of preset speeds	16			
Number of integrated I/O	Analog inputs	3: 2 configurable as voltage (0...10 V) or current (0-20 mA/4-20 mA), including probes (PTC, PT100, PT1000, or KTY84), and 1 configurable as voltage (0...±10 V)			
	Digital inputs	8: Voltage 24 V ⎓ (positive or negative logic)			
	Digital output	1: Assignable, can be used as PTO (pulse train output)			
	Analog outputs	2: Configurable as voltage (0...10 V) or current (0-20 mA)			
	Relay outputs	3: 1 with NO/NC contacts and 2 with NO contacts			
	Safety function inputs	2: For safety function STO			
Extended I/O module (optional)	Analog inputs	2 differential analog inputs configurable via software current (0-20 mA/4-20 mA), or for PTC, PT100, or PT1000 2- or 3-wire probes			
	Digital inputs	6: Voltage 24 V ⎓ (positive or negative logic)			
	Digital outputs	2: Assignable			
Extended relay module (optional)	Relay outputs	3: NO contacts			
Communication	Integrated	EtherNet/IP, Modbus/TCP dual port, Modbus serial link			
	Option modules	CANopen RJ45 daisy chain, SUB-D, and screw terminal block, PROFINET, PROFIBUS DP V1, DeviceNet, EtherCAT, and POWERLINK			
Configuration and runtime tools		Graphic display terminal, embedded Web server, DTM (Device Type Manager), SoMove software			
Standards and certifications		86/188/EEC, IEC 61000-4-2, IEC 61000-4-3, IEC 61000-4-4, IEC 61000-4-5, IEC 61000-4-6, EN/IEC 61800-3, EN/IEC 61800-5-1, IEC 61000-3-12, IEC 60721-3, IEC 61508, IEC 13849-1, TÜV certification, CE marking, ATEX 2/22, ATEX 1/21	86/188/EEC, IEC 61000-4-2, IEC 61000-4-3, IEC 61000-4-4, IEC 61000-4-5, IEC 61000-4-6, EN/IEC 61800-3, EN/IEC 61800-5-1, IEC 60721-3, IEC 61508, Marine certification (DNV-GL, ABS, RINA, BV, LR) *(1)*, IEC 13849-1, TÜV certification, CE marking, cULus, ATEX 2/22, ATEX 1/21		86/188/EEC, IEC 61000-4-2, IEC 61000-4-3, IEC 61000-4-4, IEC 61000-4-5, IEC 61000-4-6, EN/IEC 61800-3, EN/IEC 61800-5-1, IEC 60721-3, IEC 13849-1, TÜV certification, CE marking, cULus, IEC 61508, ATEX 2/22, ATEX 1/21
References		**ATV930●●●N4Z**	**ATV9A0●●●●●**	**ATV9B0●●●●●**	**ATV9L0●●●●●**
Page		3/6	3/8	3/14	3/20

(1) For marine product certificate, please contact your Schneider Electric representative.

More technical information on www.se.com

Market segments			■ **Water & wastewater** ■ **Oil & gas** ■ **Mining, minerals & metals** ■ **Consumer packaged goods (CPG)**	
Power range for 50...60 Hz line supply	Three-phase: 315...415 V, 480 V (kW)		90...800	
Main characteristics			Compact Drive Systems with an integrated line reactor to reduce the current harmonics THDi < 48%	Low Harmonic Drive Systems with 3-level technology to reach a total distortion factor THDi of around 2% which fulfills the requirements according to IEEE 519 of THDi < 5%
Variants			Compact Standard offer Modular with integrated options (CTO) User-definable on request (ETO, Full ETO)	Low Harmonic Standard offer Modular with integrated options (CTO) User-definable on request (ETO, Full ETO)
Degree of protection			IP23 IP54 with separate air flows as an option	
Drive	Output frequency		0.1...599 Hz	
	Type of control	Asynchronous motor	Standard constant torque, variable standard torque, optimized torque mode	
		Synchronous motor	PM (permanent magnet) motor, synchronous reluctance motor	
Communication	Integrated		Modbus/TCP Modbus serial link Ethernet	
	As an option		EtherNet/IP and Modbus/TCP dual port PROFINET CANopen RJ45 daisy chain, SUB-D9, and screw terminal block PROFIBUS DP V1 DeviceNet	
Interfaces and runtime tools			Graphic display terminal in the enclosure door Control terminals inside the enclosure Control terminals can be extended Reading of the parameters via USB interface on the keypad Embedded Web server, DTM (Device Type Manager), SoMove software	
Standards and certifications			CE, EAC, RCM, EN/IEC 61439, EN/IEC 61800-3, EN/IEC 61800-3 environment 2 category C3, EN/IEC 61800-5-1, IEC 60721-3, IEC 61508, ATEX 2/22, ATEX 1/21	CE, EAC, RCM, EN/IEC 61439, EN/IEC 61800-3, EN/IEC 61800-3 environment 2 category C3, EN/IEC 61800-5-1, IEC 60721-3, IEC 61508, ATEX 2/22, ATEX 1/21, IEEE 519
References			**ATV960●●●●4X1**	**ATV980●●●●4X1**
Page			4/8	4/14

Variable speed drives
Altivar Process ATV900

Altivar Process range

Process automation

Altivar Process drives are specifically designed to meet the requirements of the following market segments:
- Oil & gas
- Mining, minerals & metals
- Consumer packaged goods (CPG)
- Water & wastewater

The Altivar Process 900 series is focused on maximum productivity with exceptional motor control and connectivity.

It offers special functions for industrial process segments:
- Excellent motor performance on any type of motor
- Total control of any kind of coupling in master/slave applications
- Network services to help ensure operation continuity even in case of connection breakdown
- Web server and data logging to help reduce downtime through rapid troubleshooting and preventive maintenance

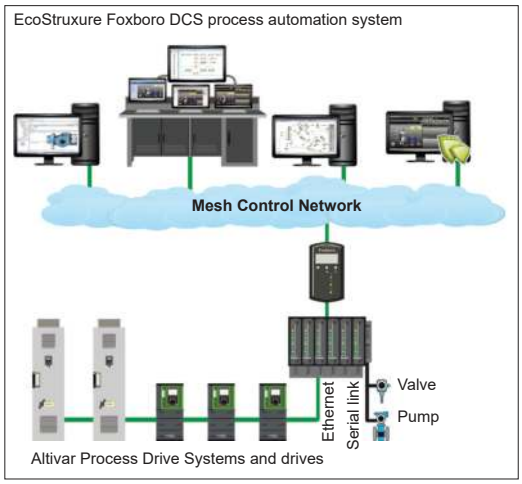

Altivar Process in EcoStruxure Foxboro DCS architecture

EcoStruxure Plant™ integration

The association of Altivar Process services with Schneider Electric process automation control systems like EcoStruxture Foxboro DCS (for process systems) or EcoStruxure Hybrid DCS (for hybrid systems) offers a high-performance, global automation and motor control solution with optimized total cost of ownership (TCO).

The solution provides operational integrity for people, processes, and assets, with improved maintenance support to help reduce downtime and ensure operation continuity.

It offers operational insight by accessing more information to optimize the process and control energy efficiency.

Based on market standards (FDT/DTM, Ethernet, etc.), it is a sustainable, scalable solution that enables processes to be adapted easily and affordably.

Oil & gas applications

- ■ Hydrocarbon production:
  - □ Drilling
  - □ Offshore and onshore extraction
  - □ Water treatment and re-injection
  - □ Crude oil storage
  - □ Separation
  - □ Pipeline pumping
  - □ Storage
  - □ Refining
  - □ DOF (digital oil field)

Use

- PCP (progressive cavity pump)
- ESP (electrical submersible pump)
- Rod pump
- Mud pump
- Rotary table, top drive
- Draw works
- Regasification compressor

Variable speed drives: page 2/2
Configuration and runtime tools: page 2/14
Combinations: page 2/18
Dimensions: page 2/69

Process automation (continued)

Mining, minerals & metals applications

- Open-pit or underground mining
- Stockpiling/homogenization
- Concentration/mineral separation
- Solid-liquid separation
- Final handling/transport
- Clinker production
- Cement production

Use

- Long-distance heavy conveying
- Bucket wheel excavator
- Special cranes:
  - Gantry cranes
  - Grab cranes
- Grinding mills (ball mills, SAG and AG mills)
- Spiral and magnetic separators
- Reclaimers and stackers
- Ship loaders
- Mobile mining machines
- Tunnel boring machines
- Vibro feeders
- Crushers
- Long belt conveyors
- Kiln main drives
- Separators for VRM (vertical roller mills)

Consumer packaged goods (CPG) applications

- Dairy beverage
- Agribusiness

Use

- Conveyors
- Mixers
- Shredders
- Centrifuges
- Hot rotary dryers
- Extruders

Water & wastewater applications

- Treatment plant
- Wastewater treatment

Use

- Decanter

1

Cooling system with two separate air flows

General presentation of the offer

Altivar Process drives can help improve equipment performance and reduce operating costs by optimizing energy consumption and user comfort.

Altivar Process drives provide a wide range of integrated functions, such as:
- Safety and automation functions that meet the requirements of some of the most demanding applications
- Various optional fieldbus modules available for seamless integration into the main automation architectures
- Numerous configurable I/O as standard to facilitate adaptation to specific applications
- Intuitive commissioning using the graphic display terminal
- Local and remote access and monitoring using the embedded Web server
- Energy savings and protection of the grid by means of integrated harmonic filters
- Installation EMC conformity by means of integrated EMC filters

Depending on the power range, Altivar Process is available with several mounting types, protection ratings, and cooling concepts for building air-cooled and liquid-cooled solutions in higher power ranges:
- Wall-mounting IP20 and 21/UL Type 1 from 0.75 kW to 315 kW/*1 HP to 500 HP*, ready-to-use for easy integration inside or without an enclosure in an electrical room
- Wall-mounting IP55 from 0.75 to 90 kW/*1 HP to 125 HP*, ready-to-use for easy integration in harsh environments and installations close to the system to reduce the length of the motor cable (the wall-mounting IP55 offer is available with and without a disconnect switch)
- Floor-standing IP21 and IP54 from 110 to 315 kW, ready-to-use with minimum dimensions for easy, optimized integration in an electrical room in a standard or harsh environment
- Floor-standing IP23 and IP54 from 110 to 800 kW, fully customizable by configuration tool, ready-to-use. Up to 2600 kW available as Engineered Drive System variant.
- Cabinet integration from 75 to 2600 kW/*125 to 2600 HP*, designed for easy and cost-effective integration of power-intensive drives into cabinets
- Cabinet integration IP20 from 0.75 to 90 kW/*1 to 125 HP*, for easy and cost-effective drive configuration inside enclosures

Cabinet integration

Get more than just a drive with the Altivar Process Modular offer for cabinet integration:
- Standardized and cost-effective integration with power rating through module paralleling up to 2600 kW/*2600 HP*
- Integrated category C3 EMC filter
- Reduced harmonics with integrated line choke for standard drives and less than 3% THDi for Low Harmonic (LH)/Regenerative drives
- Integrated highly efficient motor filter reducing the risk of motor winding insulation aging and motor damage even for longer motor cables
- Ready-to-connect line supply terminals on top and motor terminals at the bottom
- Reduced downtime of assets thanks to easily changeable electric core components such as power module with wheel (for standard drives) and power fan (for LH/Regen and standard drives) inside a drawer accessible from the front face

Enclosed drives solutions

The floor-standing IP21/IP54 fully customizable turnkey drive offers integrate:
- Drive power and control modules
- Semiconductor protection fuses
- Line chokes to limit THDi levels
- A filter to help protect the motor against the effects of dv/dt
- Accessible busbars to simplify the motor wiring and power wiring

The IP54 variant has additional equipment, such as:
- A main switch with external handle
- A system for separating the cooling air flow between the power and control sections, allowing operation in a very polluted environment as well as optimum management of thermal stress in the plant room

Altivar Process drives can be supplied as Engineered Drive System variants from 75 to 2600 kW/*125 to 2600 HP*, developed by Schneider Electric based on customer specifications. Engineered drives are available as standard with THDi level < 48% and as a Low Harmonic/Regen solution with THDi level < 3%.

Variable speed drives: page 2/2
Configuration and runtime tools: page 2/14
Combinations: page 2/18
Dimensions: page 2/69

ATV930D45Y6 equipped with IP20/UL Type 1 wall-mounting kit

General presentation of the offer (continued)

Rugged

Altivar Process drives are designed to adapt to the harshest environments.

- ■ Ambient operating temperature
- □ Wall-mounting drives:
  - IP20 and IP21: up to 160 kW/*250 HP*, -15...+50 °C/*5...122 °F* as standard, up to 60 °C/*140 °F* with derating; above 160 kW/*250 HP*, -10...+40 °C/*14...104 °F* as standard, up to 60 °C/*140 °F* with derating
  - IP55: -15...+40 °C/*5...104 °F* as standard, up to 50 °C/*122 °F* with derating
- □ Floor-standing IP21/IP23/IP54 and cabinet integration drives:
  - 0...40 °C/*32...104 °F* as standard
  - 40...50 °C/*104...122 °F* with derating
- ■ Relative humidity without condensing: 5...95%
- ■ Storage and transport temperature: -40…+70 °C/*-40…+158 °F*
- ■ Operating altitude:
- □ 0…1,000 m/*0…3,281 ft* without derating
- □ 1,000...4,800 m/*3,281…5,700 ft* with derating of 1% per 100 m/*328 ft (1)*
- ■ Withstand to harsh environments:
- □ Chemical class 3C3 conforming to IEC/EN 60721-3-3 *(1)*
- □ Mechanical class 3S3 conforming to IEC/EN 60721-3-3 *(1)*
- □ Climatic class 3K3 conforming to IEC/EN 60721-3-3
- □ Printed circuit boards with protective coating
- ■ Protection rating to suit requirements:
- □ IP00 for mounting in an enclosure, depending on the model
- □ IP20 and 21/UL Type 1 for wall mounting in a plant room and in an enclosure
- □ IP55 for wall mounting, with protection against dust and water jets
- □ Floor-standing IP21 or IP23
- □ Floor-standing IP54, with protection against dust and water jets
- □ Engineered Drive Systems variants up to IP66

A large number of external options can be combined with the Altivar 900:

- ■ Braking units and resistors
- ■ Line chokes (see page 2/52) and passive filters (see page 2/44)
- ■ Additional EMC input filters for reducing conducted emissions on the line (see pages 2/50 and 2/51)
- ■ Dv/dt and sinus filters for long cable runs or to remove the need for shielding (see pages 2/53 to 2/57)
- ■ Mounting options: The Altivar 900 drive can be mounted in a variety of ways to adapt to the various needs of an installation:
- □ Mounting without an enclosure: The Altivar 900 drive can be mounted directly on a wall without having to be installed inside an enclosure. IP20 and 21/UL Type 1 conformity can be achieved by using kits, for drives above 110 kW/*150 HP* at 380...480 V and for drives from 2.2 to 90 kW/*3 to 125 HP* at a 500...690 V supply voltage (see page 2/13).
- □ Optimized enclosures: A patented flange mounting kit is used to remove the heat generated by the power unit outside the enclosure when the variable speed drive is integrated in a cabinet (see page 2/13).

(1) Altivar Process ATV930C22...C31N4 drives are certified as chemical class 3C2 and mechanical class 3S2 conforming to IEC/EN 60721.

1

THDi ≤ 48% for 80...100% load
with Altivar Process

Altivar Process drive THDi

General presentation of the offer (continued)

Energy

Altivar Process drives help to optimize power consumption by reducing the rms input current for the same load.

- ■ Standard offer:
  - □ THDi ≤ 48% for 80 to 100% load, which is used to maintain an optimum power factor on the most common operating range
  - □ Embedded low harmonic DC choke technology complying with standard IEC 61000-3-12 for the 380…480 V offer
  - □ Embedded line choke for cabinet integration and floor-standing drive solutions
- ■ Passive filter options
  - □ Low Harmonic offer compatible with standard IEEE 519

Environment

The Altivar Process drive has been developed to meet the requirements of directives regarding protection of the environment and to anticipate future changes in regulations:

- ■ RoHS-2 *(1)*
- ■ REACH *(2)* + solution for REACH Substitute It Now (halogen-free wiring and plastics)
- ■ PEP (Product Environmental Profile) eco-passport program for reducing the carbon footprint and conserving raw materials
- ■ EoLI (end-of-life instruction) *(3)*
  - □ More than 70% recyclable materials (new ruling)
- ■ Efficient energy management: 30% reduction in consumption

Electromagnetic compatibility (EMC)

Compliance with electromagnetic compatibility requirements has been incorporated into the design of the Altivar Process Modular drives, which simplifies installation and provides an economical means of helping to ensure equipment meets CE marking requirements.
Altivar Process drives have a category C2 or C3 EMC filter, except ATV930●●●M3 and ATV930●●●M3C models that can be equiped with an additional filter to meet more stringent requirements (see page 2/50).
Altivar Process Modular drives have category C3 EMC filters that allow 300 m/*980 ft* of shielded motor cables.

Installation/Maintenance

Altivar Process drives are ergonomically designed to adapt to any type of installation:

- ■ Products, systems, or integrated in iMCC
- ■ IP00 modules that can be integrated in cabinets with a protection rating up to IP66 as a standard integration
- ■ IP20 and 21/UL Type 1, IP55, IP54
- ■ Easy installation of products and systems:
  - □ Cable entry equipped with Romex cable clamps to maintain an EMC connection for the power and control cable (optional for 500…690 V drives)
  - □ Color code for connections to the removable terminal blocks on the HMI block
  - □ Long cable for wall mounting: Up to 150 m /*492 ft* with category C3 EMC filter at 380…480V
  - □ Long cable for Altivar Process Modular and floor-standing offer: highly efficient integrated motor filters for dv/dt and common mode reduction and voltage peak limitation allow motor cable lengths up to 300 m/*980 ft* with shielded cable (category C3 environment) and 500 m/*1,640 ft* with unshielded cable (category C4 environment).
- ■ Asynchronous or synchronous motor in open loop or closed loop for 0.1...599 Hz output frequency
- ■ Special motors: Conical sliding rotor, reluctance motor
- ■ Lower maintenance costs due to drive's ergonomic design:
  - □ Fans can be replaced in less than 5 minutes
  - □ No maintenance tool required
  - □ Limited number of parts
- ■ Embedded Web server:
  - □ Compatible process elements for easier implementation
  - □ Direct worldwide access to monitoring and maintenance functions:
    - Reading values
    - Modifying data
    - Configuring parameters
    - Changing controller status

(1) European directive 2002/95/EC Restriction of Hazardous Substances.
(2) European regulation 1907/2006.
(3) According to IEC 62635 Enhanced Guidelines.

Integrated functions

Altivar Process drives include numerous advanced functions for the more complex applications in each market segment.

Advanced functions

- High-performance motor control with an overload torque up to 180% Tn in an open or closed loop
- Asynchronous, synchronous, special motors: all efficiency classes, brand independent, permanent magnet motors, torque motors, conical sliding rotor, reluctance motor
- Integrated EtherNet/IP and Modbus TCP dual port, cybersecurity(Achilles Level 2)
- Smart integration in PlantStruxure and Foxboro Evo process automation systems
- Optimized energy efficiency, detection of energy consumption drift of the installation
- Adaptation to the process by dedicated functions with modular design
- Embedded safety functions STO SIL3
- Master/slave and load sharing with drive-to-drive capability:
  - torque sharing on rigid coupling
  - torque sharing on elastic coupling
- Contextual access to technical documentation through dynamic QR code
- Continuous and historical real-time measurements with customizable dashboards
- Predictive maintenance (e.g. temperatures with PT100/1000 probe, fan monitoring, etc.)

Power measurement function

Altivar Process drives integrate a power measurement function accurate to within 5%, based on measurement of the motor voltage and the power supply:

- Process drift detection for installation reliability throughout its entire service life
- Useful system performance information provided by comparing the energy used with the energy produced:
  - Typical KPIs:
    - Specific energy consumption

Users are therefore able to monitor and analyze input power, energy produced, and the KPIs directly from the drive or from the process management system.

Safety and monitoring functions

The safety function STO and numerous monitoring functions are provided to help protect people and equipment.

- Advantages:
  - Time savings in terms of installation design and compliance
  - Fewer components and cables
  - Optimum space
  - Simplified setup of machines
  - Improved maintenance performance; limited machine intervention time and installation downtime
  - Optimized conditions for maintenance operations
- Conformity to standards EN/IEC 61508, EN/ISO 13849, and IEC 61800-5-2
- Integrated STO (Safe Torque Off) function, SIL3/Ple
- Monitoring function to help protect against premature wear

1

Altivar Process DTM in EcoStruxure Control Expert

Embedded Web server login screen

Integration

Fieldbus protocols

- ■ EtherNet/IP and Modbus/TCP dual port and Modbus serial link:
- □ Standard Modbus and Ethernet protocols
- □ Connection of configuration and runtime tools
- □ Control and supervision of the Altivar Process in process architectures (controllers, SCADA, HMIs, etc.) in industrial networks (read/write data)
- □ Diagnostic, supervision, and fieldbus management functions
- ■ Ethernet services:
- □ SNMP, SNTP, BootP & DHCP, IP v6, cybersecurity services, FDR
- □ Open Ethernet topologies

Integration of configuration and runtime tools

- ■ FDT/DTM technology (see page 2/17):
- □ Drive configuration, diagnostics, and control using EcoStruxure Control Expert or Foxboro Evo software

Configuration and runtime tools

- ■ Graphic display terminal (see page 2/14):
- □ Drive control, adjustment, and configuration
- □ Display of current values (motor, I/O, etc.)
- □ Configuration storage and download
- □ Duplication of one drive configuration on another drive from a PC or another drive
- □ Remote use by means of appropriate accessories (see page 2/15)
- □ Connection to several drives using multidrop link components (see page 2/15)
- ■ Embedded Web server (see page 2/16):
- □ Easily accessible from any PC, iPhone, iPad, Android system, and major Web browsers
- □ Network diagnostics in real time
- □ Read/write values
- ■ SoMove software (see page 2/17):
- □ Advanced functions for configuration, setup, and maintenance of Altivar Process drives

Integrated services

Altivar Process drives feature integrated services to achieve optimum time savings:

- ■ Simplified communication:
- □ Ethernet dual port with embedded Web server
- ■ Energy management (integrated power measurement)
- ■ Dynamic predictive maintenance
- ■ 3 QR codes:
  - Access to the Customer Care Center application and product data sheet
  - Direct access to description of the functions
  - QR code generated in the event of a detected error (red screen): Identification of the detected error, probable causes and remedies

Contents

2 - Drive products

Altivar Process ATV900 variable speed drives

- **Altivar Process variable speed drives presentation** ..... page 2/2
- **200...240 V 50/60 Hz wall-mounting drives** ..... page 2/4
- **380...480 V 50/60 Hz wall-mounting drives** ..... page 2/5
  - IP21/UL Type 1, with category C2 or C3 integrated EMC filter ..... page 2/5
  - IP55, with category C2 or C3 integrated EMC filter ..... page 2/7
  - IP55, with disconnect switch and category C2 or C3 integrated EMC filter ..... page 2/8
- **500...690 V 50/60 Hz wall-mounting drives** ..... page 2/9
- **380...440 V 50/60 Hz floor-standing drives** ..... page 2/10
  - IP21, with category C3 integrated EMC filter ..... page 2/10
  - IP54, with category C3 integrated EMC filter ..... page 2/11
- **Replacement parts** ..... page 2/12
- **Accessories** ..... page 2/13
- **Graphic display terminal** ..... page 2/14
- **Accessories for graphic display terminal** ..... page 2/15
- **Web server** ..... page 2/16
- **DTM libraries and SoMove setup software** ..... page 2/17

Options

- **Drive/option combinations** ..... page 2/18
- **Safety modules and additional module support** ..... page 2/25
- **Encoder interface modules and additional I/O modules** ..... page 2/28
- **Communication buses and networks** ..... page 2/30
- **Braking units and resistors** ..... page 2/36
- **Passive filters** ..... page 2/44
- **EMC filters** ..... page 2/50
- **Substitution kits for ATV61/71** ..... page 2/52
- **Line chokes** ..... page 2/52
- **dv/dt filters** ..... page 2/53
- **Sinus filters** ..... page 2/56
- **Common mode filters** ..... page 2/58
- **ATV Regenerative units** ..... page 2/61

Motor starters

- **200...240 V 50/60 Hz supply** ..... page 2/62
- **380...415 V 50/60 Hz supply** ..... page 2/63
- **440 V 50/60 Hz supply** ..... page 2/65
- **500...690 V 50/60 Hz supply** ..... page 2/67

Dimensions

- **Drives** ..... page 2/68
- **Options** ..... page 2/73

ATV930●●●N4F, ATV930●●●M3, ATV930●●●Y6, ATV950●●●N4, ATV950●●●N4E

Extensive offer

The Altivar Process wall-mounting and floor-standing products offer covers motor power ratings from 0.75...315 kW/*1...500 HP* for three-phase voltages between 200...240 V, 380...480 V, and 500...690 V.

Three-phase power supply	Motor power	Degree of protection	Reference
200...240 V (-15...10%)	0.75 kW...75 kW *1...100 HP*	IP21 UL Type 1	**ATV930U07M3...D45M3** **ATV930D30M3C...D75M3C**
380...480 V (-15...10%)	0.75 kW...315 kW *1...500 HP*	IP21 UL Type 1 IP21 UL Type 1 IP55	**ATV930U07N4...C22N4** *(1)* **ATV930D55N4C...C31N4C** *(2)* **ATV950U07N4...D90N4** **ATV950U07N4E...D90N4E** *(3)*
380...440 V (-15...10%)	110 kW...315 kW	IP21 IP54	**ATV930C11N4F...C31N4F** **ATV950C11N4F...C31N4F**
500...690 V (-15...10%)	2.2...90 kW *3...125 HP*	IP20 UL Type 1	**ATV930U22Y6...D90Y6**

(1) Also ATV930U07N4Z...D22N4Z (IP20 UL Type 1)
(2) Also ATV930D55N4Z...D90N4Z (IP00 UL Type 1)
(3) Integrated disconnect switch

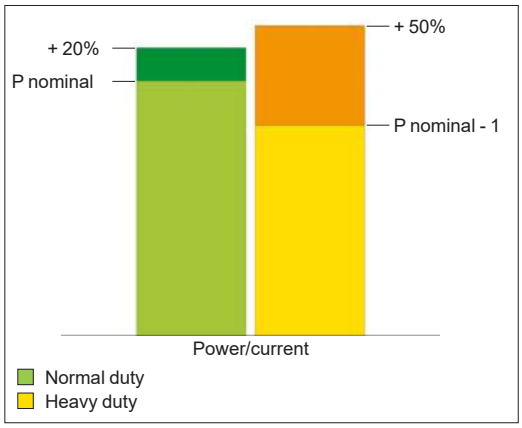

Normal duty and Heavy duty modes

Altivar Process variable speed drives are designed for use in two operating modes that can optimize the drive nominal rating according to the system constraints.

These two modes are:

- Normal duty (ND): Dedicated mode for applications requiring a slight overload (up to 120%) with a motor power no higher than the drive nominal power
- Heavy duty (HD): Dedicated mode for applications requiring a significant overload (up to 150%) with a motor power no higher than the drive nominal power derated by one rating

Accessories and options

Altivar Process drives are designed to take numerous accessories and options to increase their functionality and also their capacity for integration and adaptation.

Accessories

- ■ Drive:
- □ Fan kit (see page 2/12)
- ■ Graphic display terminal:
- □ Remote mounting kit for mounting on enclosure door (see page 2/15)
- □ Multidrop connection accessories for connecting several drives to the RJ45 terminal port (see page 2/15)

Options

- ■ Modules (see page 2/29):
- □ Extended I/O module:
  - 2 analog inputs
  - 6 digital inputs
  - 2 digital outputs
- □ Extended relay module:
  - 3 NO contacts
- □ Communication:
  - CANopen bus: RJ45 daisy chain, SUB-D, 5-way screw terminals
  - PROFINET bus
  - PROFIBUS DP V1 bus
  - EtherCAT
  - DeviceNet bus
- ■ Encoder modules (see page 2/28):
- □ Digital encoder interface module 5/12 V
- □ Analog encoder interface module
- □ Resolver interface module
- □ HTL encoder interface module
- ■ Safety modules
- □ Safety module advanced
- □ CIP safety
- ■ Braking units and braking resistors (see page 2/36)
- ■ Passive filters (see page 2/44)
- ■ Additional EMC input filters for reducing conducted emissions on the line (see page 2/50)
- ■ Output filters:
- □ dv/dt filters (see page 2/53)
- □ Sinus filters (see page 2/56)
- □ Common mode filters (see page 2/58)

Motor starters

Schneider Electric offers combinations of circuit breakers and contactors to be able to use Altivar Process drives in optimum conditions (see page 2/62). For prospective line short-circuit current up to 100 kA, please consult our Customer Care Teams.

Variable speed drives

Altivar Process ATV900

Three-phase supply voltage: 200...240 V 50/60 Hz
Wall-mounting drives

PF151200

ATV930D11M3

PF151201

ATV930D15M3

PF151202

ATV930D30M3

200...240 V (-15...10%) IP21/UL Type 1 drives - Wall mounting with braking unit

Motor			Line supply				Altivar Process			
Power indicated on rating plate (1)			Line current (2)		Apparent power	Prospective line Isc	Maximum continuous current (1)	Maximum transient current for 60 s	Reference (3)	Weight
			200 V	240 V	240 V					
ND:	Normal duty (4)									
HD:	Heavy duty (5)									
	kW	HP	A	A	kVA	kA	A	A		kg/lb
Without EMC filter (3)										
ND	0.75	1	3	2.6	1.1	50	4.6	5.5	ATV930U07M3	4.300/
HD	0.37	0.5	1.7	1.5	0.6	50	3.3	5		9.480
ND	1.5	2	5.9	5	2.1	50	8	9.6	ATV930U15M3	4.300/
HD	0.75	1	3.3	3	1.2	50	4.6	6.9		9.480
ND	2.2	3	8.4	7.2	3	50	11.2	13.4	ATV930U22M3	4.500/
HD	1.5	2	6	5.3	2.2	50	8	12		9.921
ND	3	–	11.5	9.9	4.1	50	13.7	16.4	ATV930U30M3	4.500/
HD	2.2	3	8.7	7.6	3.2	50	11.2	16.8		9.921
ND	4	5	15.1	12.9	5.4	50	18.7	22.4	ATV930U40M3	4.600/
HD	3	–	11.7	10.2	4.2	50	13.7	20.6		10.141
ND	5.5	7.5	20.2	17.1	7.1	50	25.4	30.5	ATV930U55M3	7.700/
HD	4	5	15.1	13	5.4	50	18.7	28.1		16.976
ND	7.5	10	27.1	22.6	9.4	50	32.7	39.2	ATV930U75M3	13.800/
HD	5.5	7.5	20.1	16.9	7	50	25.4	38.1		30.424
ND	11	15	39.3	32.9	13.7	50	46.8	56.2	ATV930D11M3	13.800/
HD	7.5	10	27.2	23.1	9.6	50	32.7	49.1		30.424
ND	15	20	52.6	45.5	18.9	50	63.4	76.1	ATV930D15M3	27.300/
HD	11	15	40.1	34.3	14.3	50	46.8	70.2		60.186
ND	18.5	25	66.7	54.5	22.7	50	78.4	94.1	ATV930D18M3	27.300/
HD	15	20	53.1	44.9	18.7	50	63.4	95.1		60.186
ND	22	30	76.0	64.3	26.7	50	92.6	111.1	ATV930D22M3	27.300/
HD	18.5	25	64.8	54.5	22.7	50	78.4	117.6		60.186
ND	30	40	104.7	88.6	36.8	50	123	147.6	ATV930D30M3	57.600/
HD	22	30	78.3	67.1	27.9	50	92.6	138.9		126.986
ND	37	50	128.0	107.8	44.8	50	149	178.8	ATV930D37M3	57.600/
HD	30	40	104.7	88.6	36.8	50	123	184.5		126.986
ND	45	60	155.1	130.4	54.2	50	176	211.2	ATV930D45M3	57.600/
HD	37	50	128.5	108.5	45.1	50	149	223.5		126.986

200...240 V (-15...10%) IP21/UL Type 1 drives - Wall mounting without braking unit

Motor			Line supply				Altivar Process			
Power indicated on rating plate (1)			Line current (2)		Apparent power	Prospective line Isc	Maximum continuous current (1)	Maximum transient current for 60 s	Reference (3)	Weight
			200 V	240 V	240 V					
ND:	Normal duty (4)									
HD:	Heavy duty (5)									
	kW	HP	A	A	kVA	kA	A	A		kg/lb
Without EMC filter (3)										
ND	30	40	104.7	88.6	36.8	50	123	147.6	ATV930D30M3C	56.600/
HD	22	30	78.3	67.1	27.9	50	92.6	138.9		124.782
ND	37	50	128.0	107.6	44.8	50	149	178.8	ATV930D37M3C	56.600/
HD	30	40	104.7	88.6	36.8	50	123	184.5		124.782
ND	45	60	155.1	130.4	54.2	50	175	211.2	ATV930D45M3C	56.600/
HD	37	50	128.5	108.5	45.1	50	149	223.5		124.782
ND	55	75	189	161	61.1	50	211	253.2	ATV930D55M3C	82.000/
HD	45	60	156	134	50	50	176	264	(6)	180.779
ND	75	100	256	215	83.7	50	282	338.4	ATV930D75M3C	82.000/
HD	55	75	189	161	61.1	50	211	316.5	(6)	180.779

*(1) These values are given for a nominal switching frequency of 4 kHz up to **ATV930D22M3** or 2.5 kHz for **ATV930D30M3...D45M3** and **ATV930D30M3C...D75M3C** drives, for use in continuous operation. The switching frequency is adjustable. Above 2.5 or 4 kHz (depending on the rating), the drive will automatically reduce the switching frequency in the event of an excessive temperature rise. For continuous operation above the nominal switching frequency, derate the nominal drive current (see derating curves in the Installation Manual).*

(2) Typical value for the indicated motor power and for the prospective line Isc.

*(3) Altivar Process **ATV930●●●M3** drives have been designed without an EMC filter. An additional filter can be added to help meet more stringent requirements and reduce electromagnetic emissions.*

(4) Values given for applications requiring a slight overload (up to 120%).

(5) Values given for applications requiring a significant overload (up to 150%).

*(6) The power section is accessible at the bottom of the drive. Product supplied as IP00 for mounting in an enclosure. For IP21 wall mounting, order the IP21/UL Type 1 conformity kit **VW3A9704** separately (see page 2/13).*

***Note**: Consult the summary tables of possible drive, option, and accessory combinations (see page 2/18).*

Presentation: page 1/11
Configuration and runtime tools: page 2/14
Combinations: page 2/18
Dimensions: page 2/68

Schneider Electric

Variable speed drives

Altivar Process ATV900

Three-phase supply voltage: 380...480 V 50/60 Hz
Wall-mounting drives

PF151202

ATV930D15N4

PF151203

ATV930D30N4

PF151204

ATV930D55N4

380...480 V (-15...10%) IP21/UL Type 1 drives - Wall mounting with braking unit

Motor			Line supply				Altivar Process			
Power indicated on rating plate (1)			Line current (2)		Apparent power	Prospective line Isc	Maximum continuous current (1)	Maximum transient current for 60 s	Reference (3)	Weight
			380 V	480 V	480 V					
ND:	Normal duty (4)									
HD:	Heavy duty (5)									
	kW	HP	A	A	kVA	kA	A	A		kg/lb
With category C2 or C3 integrated EMC filter (6)										
ND	0.75	1	1.5	1.3	1.1	50	2.2	2.6	ATV930U07N4	4.500/
HD	0.37	0.5	0.9	0.8	0.7	50	1.5	2.3		9.921
ND	1.5	2	3	2.6	2.2	50	4	4.8	ATV930U15N4	4.500/
HD	0.75	1	1.7	1.5	1.2	50	2.2	3.3		9.921
ND	2.2	3	4.3	3.8	3.2	50	5.6	6.7	ATV930U22N4	4.500/
HD	1.5	2	3.1	2.9	2.4	50	4	6		9.921
ND	3	–	5.8	5.1	4.2	50	7.2	8.6	ATV930U30N4	4.600/
HD	2.2	3	4.5	4	3.3	50	5.6	8.4		10.141
ND	4	5	7.6	6.7	5.6	50	9.3	11.2	ATV930U40N4	4.600/
HD	3	–	6	5.4	4.5	50	7.2	10.8		10.141
ND	5.5	7.5	10.4	9.1	7.6	50	12.7	15.2	ATV930U55N4	4.700/
HD	4	5	8	7.2	6.0	50	9.3	14		10.362
ND	7.5	10	13.8	11.9	9.9	50	16.5	19.8	ATV930U75N4	7.700/
HD	5.5	7.5	10.5	9.2	7.6	50	12.7	19.1		16.976
ND	11	15	19.8	17	14.1	50	23.5	28.2	ATV930D11N4	7.700/
HD	7.5	10	14.1	12.5	10.4	50	16.5	24.8		16.976
ND	15	20	27	23.3	19.4	50	31.7	38	ATV930D15N4	13.600/
HD	11	15	20.6	18.1	15.0	50	23.5	35.3		29.983
ND	18.5	25	33.4	28.9	24	50	39.2	47	ATV930D18N4	14.200/
HD	15	20	27.7	24.4	20.3	50	31.7	47.6		31.306
ND	22	30	39.6	34.4	28.6	50	46.3	55.6	ATV930D22N4	14.300/
HD	18.5	25	34.1	29.9	24.9	50	39.2	58.8		31.526
ND	30	40	53.3	45.9	38.2	50	61.5	73.8	ATV930D30N4	28.000/
HD	22	30	40.5	35.8	29.8	50	46.3	69.5		61.729
ND	37	50	66.2	57.3	47.6	50	74.5	89.4	ATV930D37N4	28.200/
HD	30	40	54.8	48.3	40.2	50	61.5	92.3		62.170
ND	45	60	79.8	69.1	57.4	50	88	105.6	ATV930D45N4	28.700/
HD	37	50	67.1	59.0	49.1	50	74.5	111.8		63.273
ND	55	75	97.2	84.2	70	50	106	127.2	ATV930D55N4	57.500/
HD	45	60	81.4	71.8	59.7	50	88	132		126.766
ND	75	100	131.3	112.7	93.7	50	145	174	ATV930D75N4	59.000/
HD	55	75	98.9	86.9	72.2	50	106	159		125.663
ND	90	125	156.2	135.8	112.9	50	173	207.6	ATV930D90N4	59.500/
HD	75	100	134.3	118.1	98.2	50	145	217.5		131.174
ND	110	150	201	165	121.8	50	211	253	ATV930C11N4	104.000/
HD	90	125	170	143	102.6	50	173	259.5	(7)	229.000
ND	132	200	237	213	161.4	50	250	300	ATV930C13N4	104.000/
HD	110	150	201	165	121.8	50	211	317	(7)	229.000
ND	160	250	284	262	201.3	50	302	362	ATV930C16N4	104.000/
HD	132	200	237	213	161.4	50	250	375	(7)	229.000
ND	220	350	397	324	247	50	427	512	ATV930C22N4	172.000/
HD	160	250	296	246	187	50	302	453	(8)	379.195

*(1) These values are given for an adjustable nominal switching frequency of 4 kHz for **ATV930U07N4...ATV930D45N4** drives or 2.5 kHz for **ATV930D55N4...C22N4** drives, for use in continuous operation.*
Above 2.5 or 4 kHz (depending on the rating), the drive will automatically reduce the switching frequency in the event of an excessive temperature rise. For continuous operation above the nominal switching frequency, derate the nominal drive current (see derating curves in the Installation Manual).
(2) Typical value for the indicated motor power and for the prospective line Isc.
*(3) For **ATV930●●●N4Z** cabinet integration drives, see pages 3/6 and 3/7 in the cabinet integration section.*
(4) Values given for applications requiring a slight overload (up to 120%).
(5) Values given for applications requiring a significant overload (up to 150%).
*(6) Category C2 EMC filter for **ATV930U07N4...D45N4** drives. Category C3 EMC filter above **ATV930D45N4**.*
(7) Product supplied as IP20/UL Type 1 with braking unit for wall mounting and cabinet mounting.
(8) Product supplied as IP00 for mounting in an enclosure. For IP21/UL Type 1 wall mounting, a conformity kit should be ordered separately (see page 2/13).

***Note**: Consult the summary tables of possible drive, option, and accessory combinations (see page 2/18).*

Variable speed drives

Altivar Process ATV900

Three-phase supply voltage: 380...480 V 50/60 Hz
Wall-mounting drives

PF151205

ATV930C11N4C

ATV930-950_63124_CPSCTT16004

ATV930C25N4C

380...480 V (-15...10%) IP21/UL Type 1 drives - Wall mounting without braking unit										
Motor			Line supply				Altivar Process			
Power indicated on rating plate (1)			Line current (2)		Apparent power	Prospective line Isc	Maximum continuous current (1)	Maximum transient current for 60 s	Reference (3)	Weight
			380 V	480 V	480 V					
ND:	Normal duty (4)									
HD:	Heavy duty (5)									
	kW	HP	A	A	kVA	kA	A	A		kg/lb
With category C3 integrated EMC filter										
ND	55	75	97.2	84.2	70.0	50	106	127.2	ATV930D55N4C	56.500/ 124.561
HD	45	60	81.4	71.8	59.7	50	88	132		
ND	75	100	131.3	112.7	93.7	50	145	174.0	ATV930D75N4C	58.000/ 127.868
HD	55	75	98.9	86.9	72.2	50	106	159		
ND	90	125	156.2	135.8	112.9	50	173	207.6	ATV930D90N4C	58.500/ 128.970
HD	75	100	134.3	118.1	98.2	50	145	217.5		
ND	110	150	201	165	121.8	50	211	253	ATV930C11N4C (6)	82.000/ 180.779
HD	90	125	170	143	102.6	50	173	259.5		
ND	132	200	237	213	161.4	50	250	300	ATV930C13N4C (6)	82.000/ 180.779
HD	110	150	201	165	121.8	50	211	317		
ND	160	250	284	262	201.3	50	302	362	ATV930C16N4C (6)	82.000/ 180.779
HD	132	200	237	213	161.4	50	250	375		
ND	220	350	397	324	247	50	427	512	ATV930C22N4C (6)	172.000/ 319.195
HD	160	250	296	246	187	50	302	453		
ND	250	400	451	366	279	50	481	577	ATV930C25N4C (6)	203.000/ 447.538
HD	200	300	365	301	229	50	387	581		
ND	315	500	569	461	351	50	616	739	ATV930C31N4C (6)	203.000/ 447.538
HD	250	400	457	375	286	50	481	722		

(1) These values are given for a nominal switching frequency of 2.5 kHz for use in continuous operation.
The switching frequency is adjustable for all ratings.
Above 2.5 kHz, the drive will automatically reduce the switching frequency in the event of an excessive temperature rise. For continuous operation above the nominal switching frequency, derate the nominal drive current (see derating curves in the Installation Manual).

(2) Typical value for the indicated motor power and for the maximum prospective line Isc.

(3) For **ATV930●●●N4Z** cabinet integration drives, see pages 3/6 and 3/7 in the cabinet integration section.

(4) Values given for applications requiring a slight overload (up to 120%).

(5) Values given for applications requiring a significant overload (up to 150%).

(6) Product supplied as IP00 for mounting in an enclosure. For IP21/UL Type 1 wall mounting, a conformity kit should be ordered separately (see page 2/13).

***Note**: Consult the summary tables of possible drive, option, and accessory combinations (see page 2/18).*

Variable speed drives

Altivar Process ATV900

Three-phase supply voltage: 380...480 V 50/60 Hz
Wall-mounting drives

PF151214A

ATV950D15N4

PF151215A

ATV950D30N4

PF151216A

ATV950D55N4

380...480 V (-15...10%) IP55 drives - Wall mounting with braking unit

Motor			Line supply				Altivar Process			
Power indicated on rating plate (1)			Line current (2)		Apparent power	Prospective line Isc	Maximum continuous current (1)	Maximum transient current for 60 s	Reference (3)	Weight
			380 V	480 V	480 V					
ND:	Normal duty (4)									
HD:	Heavy duty (5)									
	kW	HP	A	A	kVA	kA	A	A		kg/lb
With category C2 or C3 integrated EMC filter (6)										
ND	0.75	1	1.5	1.3	1.1	50	2.2	2.6	ATV950U07N4	10.500/ 23.149
HD	0.37	0.5	0.9	0.8	0.7	50	1.5	2.3		
ND	1.5	2	3	2.6	2.2	50	4	4.8	ATV950U15N4	10.500/ 23.149
HD	0.75	1	1.7	1.5	1.2	50	2.2	3.3		
ND	2.2	3	4.3	3.8	3.2	50	5.6	6.7	ATV950U22N4	10.500/ 23.149
HD	1.5	2	3.1	2.9	2.4	50	4	6		
ND	3	–	5.8	5.1	4.2	50	7.2	8.6	ATV950U30N4	10.600/ 23.369
HD	2.2	3	4.5	4	3.3	50	5.6	8.4		
ND	4	5	7.6	6.7	5.6	50	9.3	11.2	ATV950U40N4	10.600/ 23.369
HD	3	–	6	5.4	4.5	50	7.2	10.8		
ND	5.5	7.5	10.4	9.1	7.6	50	12.7	15.2	ATV950U55N4	10.700/ 23.589
HD	4	5	8	7.2	6.0	50	9.3	14		
ND	7.5	10	13.8	11.9	9.9	50	16.5	19.8	ATV950U75N4	13.700/ 30.203
HD	5.5	7.5	10.5	9.2	7.6	50	12.7	19.1		
ND	11	15	19.8	17	14.1	50	23.5	28.2	ATV950D11N4	13.700/ 30.203
HD	7.5	10	14.1	12.5	10.4	50	16.5	24.8		
ND	15	20	27	23.3	19.4	50	31.7	38	ATV950D15N4	19.600/ 43.211
HD	11	15	20.6	18.1	15	50	23.5	35.3		
ND	18.5	25	33.4	28.9	24	50	39.2	47	ATV950D18N4	20.600/ 45.415
HD	15	20	27.7	24.4	20.3	50	31.7	47.6		
ND	22	30	39.6	34.4	28.6	50	46.3	55.6	ATV950D22N4	20.600/ 45.415
HD	18.5	25	34.1	29.9	24.9	50	39.2	58.8		
ND	30	40	53.3	45.9	38.2	50	61.5	73.8	ATV950D30N4	50.000/ 110.231
HD	22	30	40.5	35.8	29.8	50	46.3	69.5		
ND	37	50	66.2	57.3	47.6	50	74.5	89.4	ATV950D37N4	50.000/ 110.231
HD	30	40	54.8	48.3	40.2	50	61.5	92.3		
ND	45	60	79.8	69.1	57.4	50	88	105.6	ATV950D45N4	50.000/ 110.231
HD	37	50	67.1	59	49.1	50	74.5	111.8		
ND	55	75	97.2	84.2	70	50	106	127.2	ATV950D55N4	87.000/ 191.802
HD	45	60	81.4	71.8	59.7	50	88	132		
ND	75	100	131.3	112.7	93.7	50	145	174	ATV950D75N4	87.000/ 191.802
HD	55	75	98.9	86.9	72.2	50	106	159		
ND	90	125	156.2	135.8	112.9	50	173	207.6	ATV950D90N4	87.700/ 193.345
HD	75	100	134.3	118.1	98.2	50	145	217.5		

*(1) These values are given for an adjustable nominal switching frequency of 4 kHz up to **ATV950D45N4** or 2.5 kHz for **ATV950D55N4...D90N4** drives, for use in continuous operation.*
Above 2.5 or 4 kHz (depending on the rating), the drive will automatically reduce the switching frequency in the event of an excessive temperature rise. For continuous operation above the nominal switching frequency, derate the nominal drive current (see derating curves in the Installation Manual).
(2) Typical value for the indicated motor power and for the prospective line Isc.
(3) Supplied with cable gland.
(4) Values given for applications requiring a slight overload (up to 120%).
(5) Values given for applications requiring a significant overload (up to 150%).
*(6) Category C2 EMC filter for **ATV950U07N4...D45N4** drives. Category C3 EMC filter above **ATV950D45N4**.*

***Note**: Consult the summary tables of possible drive, option and accessory combinations (see page 2/18).*

Variable speed drives

Altivar Process ATV900

Three-phase supply voltage: 380...480 V 50/60 Hz
Wall-mounting drives

PF130881

ATV950D15N4E

PF130884

ATV950D30N4E

PF130887

ATV950D55N4E

380...480 V (-15...10%) IP55 drives - Wall mounting with braking unit										
Motor			Line supply				Altivar Process			
Power indicated on rating plate (1)			Line current (2)		Apparent power	Prospective line Isc	Maximum continuous current (1)	Maximum transient current for 60 s	Reference (3)	Weight
			380 V	480 V	480 V					
ND:	Normal duty (4)									
HD:	Heavy duty (5)									
	kW	HP	A	A	kVA	kA	A	A		kg/lb
With disconnect switch and category C2 or C3 integrated EMC filter (6)										
ND	0.75	1	1.5	1.3	1.1	50	2.2	2.6	ATV950U07N4E	10.500/ 23.149
HD	0.37	0.5	0.9	0.8	0.7	50	1.5	2.3		
ND	1.5	2	3	2.6	2.2	50	4	4.8	ATV950U15N4E	10.500/ 23.149
HD	0.75	1	1.7	1.5	1.2	50	2.2	3.3		
ND	2.2	3	4.3	3.8	3.2	50	5.6	6.7	ATV950U22N4E	10.500/ 23.149
HD	1.5	2	3.1	2.9	2.4	50	4	6		
ND	3	–	5.8	5.1	4.2	50	7.2	8.6	ATV950U30N4E	10.600/ 23.369
HD	2.2	3	4.5	4	3.3	50	5.6	8.4		
ND	4	5	7.6	6.7	5.6	50	9.3	11.2	ATV950U40N4E	10.600/ 23.369
HD	3	–	6	5.4	4.5	50	7.2	10.8		
ND	5.5	7.5	10.4	9.1	7.6	50	12.7	15.2	ATV950U55N4E	10.700/ 23.589
HD	4	5	8	7.2	6.0	50	9.3	14		
ND	7.5	10	13.8	11.9	9.9	50	16.5	19.8	ATV950U75N4E	13.700/ 30.203
HD	5.5	7.5	10.5	9.2	7.6	50	12.7	19.1		
ND	11	15	19.8	17	14.1	50	23.5	28.2	ATV950D11N4E	13.700/ 30.203
HD	7.5	10	14.1	12.5	10.4	50	16.5	24.8		
ND	15	20	27	23.3	19.4	50	31.7	38	ATV950D15N4E	19.600/ 43.211
HD	11	15	20.6	18.1	15	50	23.5	35.3		
ND	18.5	25	33.4	28.9	24	50	39.2	47	ATV950D18N4E	20.600/ 45.415
HD	15	20	27.7	24.4	20.3	50	31.7	47.6		
ND	22	30	39.6	34.4	28.6	50	46.3	55.6	ATV950D22N4E	20.600/ 45.415
HD	18.5	25	34.1	29.9	24.9	50	39.2	58.8		
ND	30	40	53.3	45.9	38.2	50	61.5	73.8	ATV950D30N4E	52.000/ 114.640
HD	22	30	40.5	35.8	29.8	50	46.3	69.5		
ND	37	50	66.2	57.3	47.6	50	74.5	89.4	ATV950D37N4E	52.000/ 114.640
HD	30	40	54.8	48.3	40.2	50	61.5	92.3		
ND	45	60	79.8	69.1	57.4	50	88	105.6	ATV950D45N4E	52.000/ 114.640
HD	37	50	67.1	59	49.1	50	74.5	111.8		
ND	55	75	97.2	84.2	70	50	106	127.2	ATV950D55N4E	89.300/ 196.873
HD	45	60	81.4	71.8	59.7	50	88	132		
ND	75	100	131.3	112.7	93.7	50	145	174	ATV950D75N4E	89.300/ 196.872
HD	55	75	98.9	86.9	72.2	50	106	159		
ND	90	125	156.2	135.8	112.9	50	173	207.6	ATV950D90N4E	90.000/ 198.416
HD	75	100	134.3	118.1	98.2	50	145	217.5		

*(1) These values are given for an adjustable nominal switching frequency of 4 kHz up to **ATV950D45N4E** or 2.5 kHz for **ATV950D55N4E...D90N4E** drives, for use in continuous operation.*
Above 2.5 or 4 kHz (depending on the rating), the drive will automatically reduce the switching frequency in the event of an excessive temperature rise. For continuous operation above the nominal switching frequency, derate the nominal drive current (see derating curves in the Installation Manual).
(2) Typical value for the indicated motor power and for the prospective line Isc.
(3) Supplied with cable gland.
(4) Values given for applications requiring a slight overload (up to 120%).
(5) Values given for applications requiring a significant overload (up to 150%).
*(6) Category C2 EMC filter for **ATV950U07N4E...D45N4E** drives. Category C3 EMC filter above **ATV950D45N4E**.*

***Note**: Consult the summary tables of possible drive, option, and accessory combinations (see page 2/18).*

Variable speed drives

Altivar Process ATV900

Three-phase supply voltage: 500...690 V 50/60 Hz
Wall-mounting drives

ATV930D11Y6

ATV930D90Y6

500...690 V (-15...10%) IP00 drives - Wall mounting with braking unit (1)

Motor					Line supply				Altivar Process			
Power indicated on rating plate (2)					Line current (3)		Apparent power	Maximum prospective line Isc	Max. continuous current (2)	Max. transient current for 60 s	Reference	Weight
ND:	Normal duty (4)				500 V	690 V	690 V					
HD:	Heavy duty (5)											
Supply voltage	500 V		690 V									
	kW	HP	kW	HP	A	A	kVA	kA	A	A		kg/lb
With category C3 integrated EMC filter												
ND	1.5	2	2.2	3	3.4	3.6	4.3	70	3.1	3.7	ATV930U22Y6	22.000/48.502
HD	1.1	1.5	1.5	2	2.6	2.6	3.1	70	2.4	3.6		
ND	2.2	3	3	–	4.7	4.8	5.7	70	4.2	5.0	ATV930U30Y6	22.000/48.502
HD	1.5	2	2.2	3	3.4	3.6	4.3	70	3.1	4.7		
ND	3	–	4	5	6.2	6.1	7.3	70	5.4	6.5	ATV930U40Y6	22.000/48.502
HD	2.2	3	3	–	4.7	4.8	5.7	70	4.2	6.3		
ND	4	5	5.5	7.5	7.9	8	9.6	70	7.2	8.6	ATV930U55Y6	22.000/48.502
HD	3	–	4	5	6.2	6.1	7.3	70	5.4	8.1		
ND	5.5	7.5	7.5	10	10.4	10.5	12.5	70	9.5	11.4	ATV930U75Y6	22.000/48.502
HD	4	5	5.5	7.5	7.9	8	9.6	70	7.2	10.8		
ND	7.5	10	11	15	13.6	14.7	17.6	70	13.5	16.2	ATV930D11Y6	22.000/48.502
HD	5.5	7.5	7.5	10	10.4	10.5	12.5	70	9.5	14.3		
ND	11	15	15	20	18.4	19.2	22.9	70	18	21.6	ATV930D15Y6	22.000/48.502
HD	7.5	10	11	15	13.6	14.7	17.6	70	13.5	20.3		
ND	15	20	18.5	25	23.1	23	27.5	70	24	28.8	ATV930D18Y6	22.000/48.502
HD	11	15	15	20	18.4	19.2	22.9	70	18	27.0		
ND	18.5	25	22	30	27.6	26	31.1	70	29	34.8	ATV930D22Y6	22.000/48.502
HD	15	20	18.5	25	23.2	23	27.5	70	24	36.0		
ND	22	30	30	40	32.1	32.8	39.2	70	34	40.8	ATV930D30Y6	22.000/48.502
HD	18.5	25	22	30	27.6	26	31.1	70	29	43.5		
ND	30	40	37	50	47.2	46.2	55.2	70	45	54.0	ATV930D37Y6	53.000/116.845
HD	22	30	30	40	37.7	38.5	46.0	70	34	51.0		
ND	37	50	45	60	55.6	54.4	65.0	70	55	66.0	ATV930D45Y6	53.000/116.845
HD	30	40	37	50	47.2	46.2	55.2	70	45	67.5		
ND	45	60	55	75	65.5	62.5	74.7	70	66	79.2	ATV930D55Y6	53.000/116.845
HD	37	50	45	60	55.6	54.4	65.0	70	55	82.5		
ND	55	75	75	100	82.7	87.7	104.8	70	83	99.6	ATV930D75Y6	53.000/116.845
HD	45	60	55	75	71	68.5	81.9	70	66	99.0		
ND	75	100	90	125	108.3	99.4	118.8	70	108	129.6	ATV930D90Y6	53.000/116.845
HD	55	75	75	100	82.7	87.7	104.8	70	83	124.5		

(1) Product supplied as IP00 for mounting in an enclosure. For IP20/UL Type 1 wall mounting, an adaptation kit should be ordered separately.

*(2) These values are given for use in continuous operation with a nominal switching frequency between 2.5 kHz (**ATV930D37Y6**...**D90Y6**) and 4 kHz (**ATV930U22Y6**...**D30Y6**). The switching frequency is adjustable from 1…4.9 kHz (**ATV930D37Y6**...**D90Y6**) to 2…8 kHz (**ATV930U22Y6**...**D30Y6**).*
Above the nominal switching frequency, the drive will automatically reduce it in the event of an excessive temperature rise.
For continuous operation above the nominal switching frequency, nominal drive current should be derated according to the derating curves in the Installation Manual.

(3) Typical value for the indicated motor power and for the maximum prospective line Isc.

(4) Values given for applications requiring a slight overload (up to 120%).

(5) Values given for applications requiring a significant overload (up to 150%).

***Note:** Consult the summary tables of possible drive, option, and accessory combinations (see page 2/18).*

Variable speed drives

Altivar Process ATV900

Three-phase supply voltage: 380...440 V 50/60 Hz
Floor-standing drives without braking unit

PF151206

ATV930C16N4F

380...440 V (-15...10%) IP21 drives - Floor standing without braking unit

Motor			Line supply				Altivar Process			
Power indicated on rating plate (1)			Line current (2)		Apparent power	Maximum prospective line Isc	Maximum continuous current (1)	Maximum transient current for 60 s	Reference	Weight
			380 V	400 V	400 V					
ND:	Normal duty (3)									
HD:	Heavy duty (4)									
	kW	HP	A	A	kVA	kA	A	A		kg/lb
With category C3 integrated EMC filter (5)										
ND	110	–	207	195	135	50	211	253	ATV930C11N4F	300/661
HD	90	–	174	164	113	50	173	260		
ND	132	–	250	232	161	50	250	300	ATV930C13N4F	300/661
HD	110	–	207	197	136	50	211	317		
ND	160	–	291	277	192	50	302	362	ATV930C16N4F	300/661
HD	132	–	244	232	161	50	250	375		
ND	200	–	369	349	242	50	370	444	ATV930C20N4F	400/881
HD	160	–	302	286	198	50	302	453		
ND	250	–	453	432	299	50	477	572	ATV930C25N4F	400/882
HD	200	–	369	353	244	50	370	555		
ND	315	–	566	538	373	50	590	708	ATV930C31N4F	400/882
HD	250	–	453	432	299	50	477	716		

(1) These values are given for a nominal switching frequency of 2.5 kHz for use in continuous operation.
The switching frequency is adjustable for all ratings.
Above 2.5 kHz, the drive will automatically reduce the switching frequency in the event of an excessive temperature rise. For continuous operation above the nominal switching frequency, derate the nominal drive current (see derating curves in the Installation Manual).

(2) Typical value for the indicated motor power and for the maximum prospective line Isc.

(3) Values given for applications requiring a slight overload (up to 120%).

(4) Values given for applications requiring a significant overload (up to 150%).

(5) Integrated motor chokes allowing a shielded motor cable length up to 300 m/984 ft in category C3 and an unshielded cable length up to 450 m/1,476 ft in category C4.

***Note**: Consult the summary tables of possible drive, option, and accessory combinations (see page 2/18).*

Variable speed drives

Altivar Process ATV900

Three-phase supply voltage: 380...440 V 50/60 Hz
Floor-standing drives without braking unit

PF151221

ATV950C31N4F

380...440 V (-15...10%) IP54 drives - Floor standing without braking unit

Motor			Line supply				Altivar Process			
Power indicated on rating plate			Line current (1)		Apparent power	Maximum prospective line Isc	Maximum continuous current	Maximum transient current for 60 s	Reference	Weight
			380 V	400 V	400 V					
ND:	Normal duty (2)									
HD:	*Heavy duty (3)*									
	kW	*HP*	A	A	kVA	kA	A	A		kg/*lb*
With disconnect switch and category C3 integrated EMC filter *(4)*										
ND	110	–	207	195	135	50	211	253	ATV950C11N4F	310/ *683*
HD	*90*	*–*	*174*	*164*	*113*	*50*	*173*	*260*		
ND	132	–	250	232	161	50	250	300	ATV950C13N4F	310/ *683*
HD	*110*	*–*	*207*	*197*	*136*	*50*	*211*	*317*		
ND	160	–	291	277	192	50	302	362	ATV950C16N4F	310/ *683*
HD	*132*	*–*	*244*	*232*	*161*	*50*	*250*	*375*		
ND	200	–	369	349	242	50	370	444	ATV950C20N4F	420/ *926*
HD	*160*	*–*	*302*	*286*	*198*	*50*	*302*	*453*		
ND	250	–	453	432	299	50	477	572	ATV950C25N4F	420/ *926*
HD	*200*	*–*	*369*	*353*	*244*	*50*	*370*	*555*		
ND	315	–	566	538	373	50	590	708	ATV950C31N4F	420/ *926*
HD	*250*	*–*	*453*	*432*	*299*	*50*	*477*	*716*		

(1) Typical value for the indicated motor power and for the maximum prospective line Isc.
(2) Values given for applications requiring a slight overload (up to 120%).
(3) Values given for applications requiring a significant overload (up to 150%).
(4) Integrated motor chokes allowing a shielded motor cable length up to 300 m/984 ft in category C3 and an unshielded cable length up to 450 m/1,476 ft in category C4.

***Note**: Consult the summary tables of possible drive, option, and accessory combinations (see page 2/18).*

Variable speed drives

Altivar Process ATV900

Replacement parts

F19_FAN_CPSCT17001

VX5VPS3002

F19_FAN_CPSCT17002

VX5VPS5002

Description	Corresponding drive	Reference	Weight kg/*lb*
Fan kit for wall-mounting drives			
Power fan for IP21 and IP55 drives, bracket, instruction sheets	ATV930U07M3...U40M3, ATV930U07N4...U55N4, ATV950U07N4...U55N4, ATV950U07N4E...U55N4E	VX5VPS1001	–
	ATV930U55M3, ATV930U75N4...D11N4, ATV950U75N4...D11N4, ATV950U75N4E...D11N4E	VX5VPS2001	–
	ATV930U75M3...D11M3, ATV930D15N4...D22N4, ATV950D15N4...D22N4, ATV950D15N4E...D22N4E	VX5VPS3001	–
	ATV930U22Y6...D30Y6	VX5VPS3002	–
	ATV930D15M3...D22M3, ATV930D30N4...D45N4, ATV950D30N4...D45N4, ATV950D30N4E...D45N4E	VX5VPS4001	–
	ATV930D30M3...D45M3, ATV930D30M3C...D45M3C, ATV930D55N4...D90N4, ATV950D55N4...D90N4, ATV950D55N4E...D90N4E	VX5VPS5001	–
	ATV930D37Y6...D90Y6	VX5VPS5002	–
	ATV930D55M3C...D75M3C, ATV930C11N4...C16N4, ATV930C11N4C...C16N4C	VX5VPS6001	–
	ATV930C22N4, ATV930C22N4C...ATV930C31N4C	VZ3V1212 *(1)*	
		VZ3V1213 *(2)*	
Control fan for IP55 drives, bracket, instruction sheets	ATV950U07N4...D22N4, ATV950U07N4E...D22N4E	VX5VP50A001	–
	ATV950D30N4...D90N4, ATV950D30N4E...D90N4E	VX5VP50BC001	–
Fan kit for floor-standing drives			
Power fan, bracket, instruction sheets	ATV930C11N4F...C31N4F, ATV950C11N4F...C31N4F	VX5VPM001	–
Door fan, bracket, instruction sheets	ATV930C11N4F...C31N4F, ATV950C11N4F...C31N4F	VX5VPM002	–
Enclosure grid filter pads			
223 x 223 mm/ *8.78 x 8.78 in.* enclosure grid filter pad	ATV950C11N4F...C16N4F	NSYCAF223	–
291 x 291 mm/ *11.46 x 11.46 in.* enclosure grid filter pad	ATV950C20N4F...C31N4F	NSYCAF291	–

(1) Electronic power fan for drive, with 1 unit for ATV930C22N4(C), 2 units for ATV930C25N4C, and 3 units for ATV930C31N4C.

(2) Internal fan for drive, with 1 unit for ATV930C22N4(C), 2 units for ATV930C25N4C, and 3 units for ATV930C31N4C.

Universal Enclosures catalog

Accessories for flange mounting

Description	Corresponding kit or drive *(1)*	Use	Enclosure max.height (mm/*in.*)	Enclosure max. width (mm/*in.*)	Reference	Weight kg/*lb*
Flange-mounting kit for separate air flow *(2)* For details of kit contents please consult the product page on our website.	ATV930U07M3...U40M3, ATV930U07N4...U55N4	–	360/ *14.17*	235/ *9.25*	NSYPTDS1	1.400/ *3.086*
	ATV930U55M3, ATV930U75N4...D11N4	–	420/ *16.54*	265/ *10.43*	NSYPTDS2	1.700/ *3.748*
	ATV930U75M3...D11M3, ATV930D15N4...D22N4	–	555/ *21.85*	295/ *11.61*	NSYPTDS3	2.100/ *4.630*
	ATV930D15M3...D22M3, ATV930D30N4...D45N4	–	800/ *31.50*	385/ *15.16*	NSYPTDS4	8.102/ *17.862*
	ATV930D30M3...D45M3 ATV930D55N4...D90N4	–	975/ *38.39*	427/ *16.81*	NSYPTDS5	11.086/ *24.440*
	ATV930C11N4...C16N4 ATV930C11N4C...C16N4C ATV930D55M3...D75M3	–	–	–	VW3A95116	–
	ATV930C22N4 ATV930C22N4C	–	–	–	VW3A9513	4.700/ *10.362*
	ATV930C25N4C ATV930C31N4C	Without braking unit	–	–	VW3A9514	4.700/ *10.362*
		With braking unit	–	–	VW3A9515	4.700/ *10.362*
	ATV930D18S6...D22S6 ATV930U22Y6...D30Y6	–	–	–	VW3A95117	–
	ATV930D30S6...D75S6 ATV930D37Y6...D90Y6	–	–	–	VW3A95118	–

ATV340_OP2073

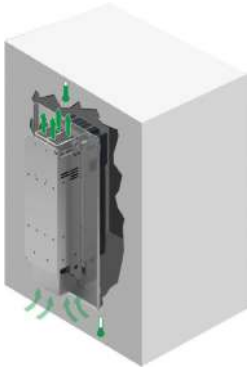

Flange-mounting kit installed inside cabinet

IP20 and IP21/UL Type 1 conformity kits

Description	Corresponding drive	Use	Reference	Weight kg/*lb*
IP20/UL Type 1 conformity kit: housing, fixing accessories, instruction sheet	ATV930U22Y6...D30Y6	–	VW3A9705	–
	ATV930D37Y6...D90Y6	–	VW3A9706	–
IP21/UL Type 1 conformity kit: metal conduit box, fixing accessories, instruction sheet	ATV930D55M3...D75M3 ATV930C11N4C...C16N4C	–	VW3A9704	9.000/ *19.842*
UL Type 1 conformity kit: cover, casing, plates, fixing accessories, instruction sheet	ATV930C22N4	–	VW3A9212	14.600/ *32.187*
	ATV930C25N4C ATV930C31N4C	Without braking unit	VW3A9213	19.500/ *42.990*

F19_ACC_CPSCT17006

VW3A9705

IP31 conformity kit

Description	Corresponding drive	Use	Reference	Weight kg/*lb*
IP31 conformity kit: EMC plate, cover, casing, fixing accessories, instruction sheet	ATV930C22N4, ATV930C22N4C	–	VW3A9112	14.600/ *32.187*
	ATV930C25N4C, ATV930C31N4C	Without braking unit	VW3A9113	19.500/ *42.990*
		With braking unit	VW3A9114	19.500/ *42.990*

(1) All accessories designed for use with N4 suffix products ATV930...U75N4 and ATV930D11N4...D90N4 can also be used with their ..N4Z suffix equivalent products.

(2) RUE-2192 patented system.

Graphic display terminal (example shows dynamic speed and torque)

Detected fault: The screen's red backlight is activated automatically

Embedded dynamic QR codes for contextual, instantaneous access to online help

Scanning the QR code from a smartphone or tablet

Instant access to online help

Graphic display terminal (supplied with the drive)

This terminal can be:
- Connected and mounted on the front of the drive
- Connected and mounted on an enclosure door using a remote mounting accessory
- Connected to a PC to exchange files via a Mini USB/USB connection *(1)*
- Connected to several drives in multidrop mode (see page 2/15)

This terminal is used to:
- Control, adjust, and configure the drive
- Display current values (motor, I/O, and process data)
- Display graphic dashboards such as the energy consumption monitoring dashboard
- Store and download configurations (several configuration files can be stored in the 16 MB memory)
- Duplicate the configuration of one powered-up drive on another powered-up drive
- Copy configurations from a PC or drive and duplicate them on another drive (the drives must be powered on for the duration of the duplication operations)

Other characteristics:
- 24 integrated languages (complete alphabets) covering the majority of countries around the world (other languages can be added; consult the graphic display terminal page on our website)
- 2-color backlit display (white and red); if an error is detected, the red backlight is activated automatically (function can be disabled)
- Operating range: -15…50 °C/*5…122 °F*
- Degree of protection: IP65
- Trend curves: Graphic display of changes over time in monitoring variables, energy data, and process data
- Embedded dynamic QR codes for contextual, instantaneous access to online help (diagnostics and settings, etc.) using a smartphone or tablet
- Real-time clock with 10-year backup battery providing data acquisition and event timestamping functions even when the drive is stopped

Description

Display:
- 8 lines, 240 x 160 pixels
- Displays bar charts, gauges, and trend charts
- 4 function keys to facilitate navigation and provide contextual links for enabling functions
- "STOP/RESET" button: Local control of motor stop command/clearing detected errors
- "RUN" button: Local control of motor run command
- Navigation buttons:
  - OK button: Saves the current value (ENT)
  - Turn ±: Increases or decreases the value, goes to the next or previous line
  - "ESC" button: Aborts a value, parameter, or menu to return to the previous selection
  - Home: Root menu
  - Information (i): Contextual help

References

Description	Reference	Weight kg/ *lb*
Graphic display terminal	VW3A1111	0.200/ *0.441*

Communication accessory

Description	Reference	Weight kg/ *lb*
Wi-Fi dongle Portable battery powered Wi-Fi access point for Wi-Fi equipment (PC, tablet, smartphone, etc.)	TCSEGWB131W	0.134/ *0.295*

(1) Graphic display terminal used only as a handheld terminal.

Remote mounting kit for mounting graphic display terminal on enclosure door (front panel)

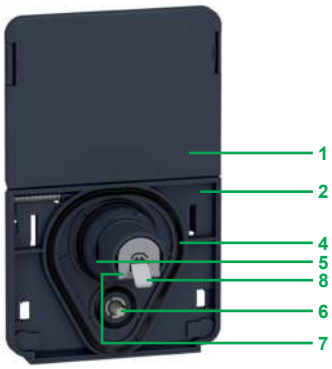

Remote mounting kit for graphic display terminal (rear panel)

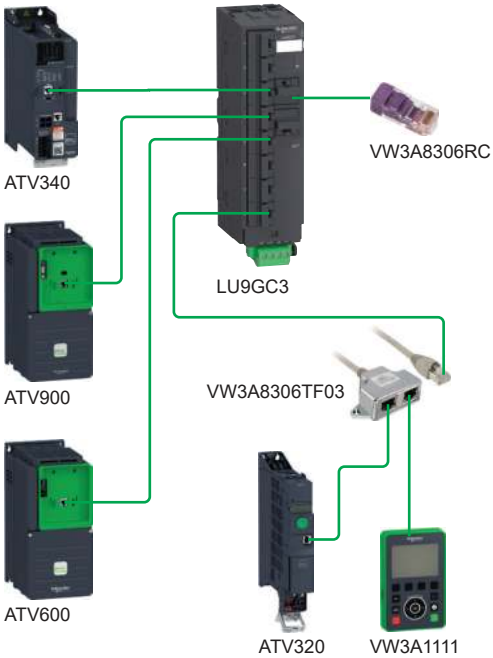

Example of multidrop architecture for graphic display terminal

Accessories for graphic display terminal

■ Remote mounting kit for mounting on enclosure door with IP65 protection rating as standard

The kit comprises:

– Tightening tool (also sold separately under the reference ZB5AZ905)
1 Cover plate to maintain IP65 protection when there is no terminal connected
2 Mounting plate
3 RJ45 port for the graphic display terminal
4 Seal
5 Fixing nut
6 Anti-rotation pin
7 RJ45 port for connecting the remote-mounting cordset (10 m/*33 ft* maximum). Cordsets should be ordered separately depending on the length required
8 Grounding connector

Drilling a hole with a standard Ø 22 tool, as used for a pushbutton, allows the unit to be mounted without needing a cut-out in the enclosure (Ø 22.5 mm/*Ø 0.89 in.* drill hole).

References

Description	Length m/ *ft*	IP rating	Reference	Weight kg/ *lb*
Remote mounting kit Order with remote-mounting cordset VW3A1104R●●●	–	65/UL Type 12	VW3A1112	–
Tightening tool for remote mounting kit	–	–	ZB5AZ905	0.016/ *0.035*
Remote-mounting cordset equipped with 2 RJ45 connectors	1/ *3.28*	–	VW3A1104R10	0.050/ *0.110*
	3/ *9.84*	–	VW3A1104R30	0.150/ *0.331*
	5/ *16.40*	–	VW3A1104R50	0.250/ *0.551*
	10/ *32.81*	–	VW3A1104R100	0.500/ *1.102*
USB/Mini B USB cable for connecting the display terminal to a PC	–	–	TCSXCNAMUM3P	–
IP65 remote mounting kit for Ethernet port *(1)* Ø 22 RJ45 female/female adapter with seal	–	65	VW3A1115	0.018/ *0.040*
Set of 10 x IP55 shutters: To maintain IP55 protection when the graphic display terminal is removed *(2)*	–	55	VW3A1116	0.640/ *1.411*

Multidrop connection accessories

These accessories are used to connect a graphic display terminal to several drives via a multidrop link. This multidrop connection uses the RJ45 terminal port on the front of the drive.

Connection accessories

Description			Sold in lots of	Unit reference	Weight kg/ *lb*
Modbus splitter box 10 RJ45 connectors and 1 screw terminal block			–	LU9GC3	0.500/ *1.102*
Modbus T-junction boxes	With 0.3 m/*0.98 ft* integrated cable		–	VW3A8306TF03	0.190/ *0.419*
	With 1 m/*3.28 ft* integrated cable		–	VW3A8306TF10	0.210/ *0.463*
Modbus line terminator	For RJ45 connector	R = 120 Ω C = 1 nf	2	VW3A8306RC	0.010/ *0.022*

Cordsets (equipped with 2 RJ45 connectors)

Used for	Length m/ *ft*	Reference	Weight kg/ *lb*
Serial link	0.3/ *0.98*	VW3A8306R03	0.025/ *0.055*
	1/ *3.28*	VW3A8306R10	0.060/ *0.132*
	3/ *9.84*	VW3A8306R30	0.130/ *0.287*

(1) Used to connect a remote PC to the RJ45 port on an IP21 drive mounted in an enclosure or on a wall. Drill hole with a standard Ø 22 tool, as used for a pushbutton. (Requires a remote-mounting cordset VW3A1104R●0● equipped with 2 RJ45 connectors).
(2) Only compatible with ATV950 drives.

2

Login screen

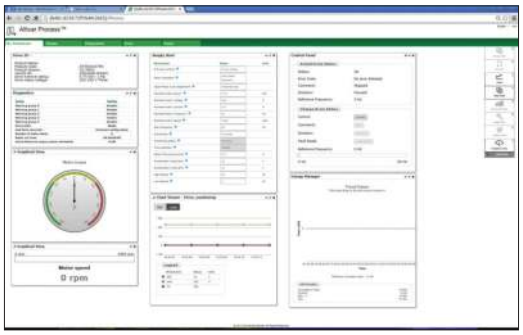

Customizable widgets

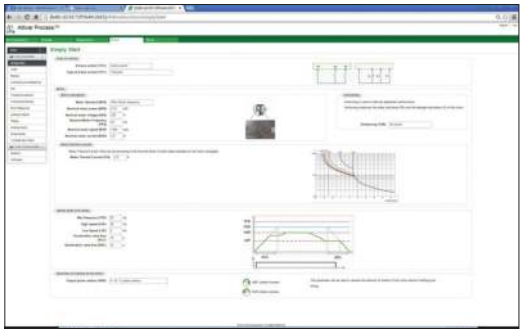

Drive adjustment parameters

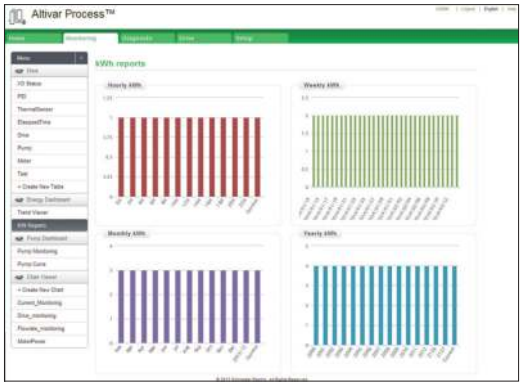

Energy dashboard

Web server

Presentation

- ■ The Web server can be accessed:
  - □ For a drive not connected to an Ethernet network
    - Via an Ethernet cable or the Schneider Electric WiFi dongle (the drive then appears as a network device)
  - □ For a drive connected to an Ethernet network
    - From any point on the network by entering the drive IP address

- ■ The Web server is used for:
  - □ Commissioning the drive (setting configuration parameters and enabling the main functions)
  - □ Monitoring energy and process data, as well as drive and motor data
  - □ Diagnostics (drive status, file transfer, detected error and warning logs)

Description

The Web server is structured around 5 tabs.

- ■ “My dashboard” tab:
  - □ Configurable using a wide choice of widgets; groups all the information and dashboards selected by the user on one page

- ■ “Display” tab:
  - □ Monitors energy indicators, efficiency, and performance
  - □ Displays process data
  - □ Monitors drive parameters and status
  - □ Shows the I/O state and assignment

- ■ “Diagnostics” tab:
  - □ Drive status
  - □ Time- and date-stamped detected error and warning logs
  - □ Network diagnostics
  - □ Access to drive self-tests

- ■ “Drive” tab:
  - □ Access to the main drive adjustment parameters with contextual help

- ■ “Setup” tab:
  - □ Network configuration
  - □ Access management
  - □ Transferring and retrieving drive configurations
  - □ Exporting data acquisition files and logs
  - □ Customizing pages (colors, logos, etc.)

Other characteristics:
- ■ Ease of connection via the RJ45 port or Wi-Fi connection
- ■ Password-protected authentication (modifiable password; access rights can be configured by administrator)
- ■ No downloads or installation necessary
- ■ Web server can be disabled
- ■ Works in a similar way on PCs, iPhones, iPads, Android systems, and the following major Web browsers:
  - □ Internet Explorer® (version 8 or higher)
  - □ Google Chrome® (version 11 or higher)
  - □ Mozilla Firefox® (version 4 or higher)
  - □ Safari® (version 5.1.7 or higher)

DTM

Presentation

Using FDT/DTM technology it is possible to configure, control, and diagnose Altivar Process drives directly in EcoStruxure Control Expert and SoMove software by means of the same software brick (DTM).
FDT/DTM technology standardizes the communication interface between field devices and host systems. The DTM contains a uniform structure for managing drive access parameters.

Altivar Process DTM in EcoStruxure Control Expert

Specific functions of the Altivar Process DTM

- Offline or online access to drive data
- Transfer of configuration files from and to the drive
- Customization (dashboard, My Menu, etc.)
- Access to drive parameters and option cards
- Oscilloscope function
- Graphic interface to assist with configuration of the Altivar Process functions
- Energy and process dashboards
- Graphic display of system operation and comparison with optimum operation (dynamic speed and torque curves)
- Detected error and warning logs (with timestamping)

Advantages of the DTM library in EcoStruxure Control Expert:
- Single tool for configuration, setup, and diagnostics
- Network scan for automatic recognition of network configuration
- Ability to add/remove, copy/paste configuration files from other drives in the same architecture
- Single input point for all parameters shared between the ePAC (programmable controller) and the Altivar Process drive
- Creation of drive profiles for implicit communication with the ePAC as well as dedicated profiles for programs with DFBs (derived function blocks)
- Integration in the fieldbus topology
- Drive configuration is an integral part of the EcoStruxure Control Expert project file (STU) and the archive file (STA)
- Configuration, transfer, and monitoring of the functional safety functions

Advantages of the DTM library in SoMove:
- Drive-oriented software environment
- Wired connection to the Ethernet communication port
- Standard cable (file transfer performance)
- Function block library for EcoStruxure Control Expert
- Display blocks for Vijeo Citect

Third-party software and downloads:
- The Altivar Process DTM library is a flexible, open, and interactive tool that can be used in a third-party FDT.
- DTMs can be downloaded from our website.

SoMove software

SoMove software

Presentation

SoMove software for PC is used to configure, set up, and maintain Altivar Process drives.

In addition to the functions offered by the Web server, SoMove software features the oscilloscope function for accurate display of data samples, as well as access to multi-drive applications.

The software can be connected to Altivar Process variable speed drives via:
- Ethernet Modbus and Wi-Fi connection with the Wi-Fi dongle TCSEGWB131W
- Ethernet Modbus TCP connection

For more information on SoMove setup software, please consult the SoMove Setup software for motor control devices catalog.

Variable speed drives

Altivar Process ATV900

Options for ATV930●●●M3/M3C and ATV930●●●N4/N4C drives

Table showing possible combinations of options for ATV930●●●M3/M3C, ATV930●●●N4/N4C, and ATV930●●●N4Z drives

Motor		Drive	Accessories			Options										
			Fan kit	Flange-mounting kit	UL Type 1 (IP2X) conformity kit	Passive filters (50 Hz)		Passive filters (60 Hz)		EMC filters		dv/dt filters		Sinus filter		Common mode filters *(2)*
kW	*HP*					THDi < 10%	THDi < 5%	THDi < 10%	THDi < 5%	Filter	IP21 kit	Filter	IP21 kit	Filter	IP21 kit	
Three-phase supply voltage: 200…240 V 50/60 Hz - IP21/UL Type 1																
0.75	*1*	**ATV930U07M3**	VX5VPS1001	NSYPTDS1	–	–	–	–	–	VW3A4701	VW3A47901	VW3A5301	VW3A53902	VW3A5401	VW3A53901	VW3A5502
1.5	*2*	**ATV930U15M3**	VX5VPS1001	NSYPTDS1	–	–	–	–	–	VW3A4701	VW3A47901	VW3A5302	VW3A53902	VW3A5402	VW3A53901	VW3A5502
2.2	*3*	**ATV930U22M3**	VX5VPS1001	NSYPTDS1	–	–	–	–	–	VW3A4702	VW3A47902	VW3A5302	VW3A53902	VW3A5402	VW3A53901	VW3A5502
3	–	**ATV930U30M3**	VX5VPS1001	NSYPTDS1	–	–	–	–	–	VW3A4702	VW3A47902	VW3A5302	VW3A53902	VW3A5402	VW3A53901	VW3A5502
4	*5*	**ATV930U40M3**	VX5VPS1001	NSYPTDS1	–	–	–	–	–	VW3A4703	VW3A47903	VW3A5303	VW3A53902	VW3A5403	VW3A53902	VW3A5502
5.5	*7.5*	**ATV930U55M3**	VX5VPS2001	NSYPTDS2	–	–	–	–	–	VW3A4703	VW3A47903	VW3A5304	VW3A53903	VW3A5404	VW3A53903	VW3A5502
7.5	*10*	**ATV930U75M3**	VX5VPS3001	NSYPTDS3	–	–	–	–	–	VW3A4703	VW3A47903	VW3A5304	VW3A53903	VW3A5404	VW3A53903	VW3A5504
11	*15*	**ATV930D11M3**	VX5VPS3001	NSYPTDS3	–	–	–	–	–	VW3A4704	VW3A47904	VW3A5304	VW3A53903	VW3A5404	VW3A53903	VW3A5504
15	*20*	**ATV930D15M3**	VX5VPS4001	NSYPTDS4	–	–	–	–	–	VW3A4705	VW3A47905	VW3A5305	VW3A53905	VW3A5405	VW3A53904	VW3A5504
18.5	*25*	**ATV930D18M3**	VX5VPS4001	NSYPTDS4	–	–	–	–	–	VW3A4706	VW3A47906	VW3A5305	VW3A53905	VW3A5405	VW3A53904	VW3A5504
22	*30*	**ATV930D22M3**	VX5VPS4001	NSYPTDS4	–	–	–	–	–	VW3A4706	VW3A47906	VW3A5305	VW3A53905	VW3A5405	VW3A53904	VW3A5504
30	*40*	**ATV930D30M3**	VX5VPS5001	NSYPTDS5	–	–	–	–	–	VW3A4707	VW3A47907	VW3A5306	–	VW3A5406	–	VW3A5504
37	*50*	**ATV930D37M3**	VX5VPS5001	NSYPTDS5	–	–	–	–	–	VW3A4707	VW3A47907	VW3A5306	–	VW3A5406	–	VW3A5504
45	*60*	**ATV930D45M3**	VX5VPS5001	NSYPTDS5	–	–	–	–	–	VW3A4708	VW3A47908	VW3A5306	–	VW3A5406	–	VW3A5504
Three-phase supply voltage: 200…240 V 50/60 Hz - IP21/UL Type 1 without braking unit																
45	*60*	**ATV930D30M3C**	VX5VPS5001	NSYPTDS5	–	–	–	–	–	VW3A4707	VW3A47907	VW3A5306	–	VW3A5406	–	VW3A5504
45	*60*	**ATV930D37M3C**	VX5VPS5001	NSYPTDS5	–	–	–	–	–	VW3A4707	VW3A47907	VW3A5306	–	VW3A5406	–	VW3A5504
45	*60*	**ATV930D45M3C**	VX5VPS5001	NSYPTDS5	–	–	–	–	–	VW3A4708	VW3A47908	VW3A5306	–	VW3A5406	–	VW3A5504
55	*75*	**ATV930D55M3C**	VX5VPS6001	VW3A95116	VW3A9704	–	–	–	–	VW3A4709	–	VW3A5307	–	–	–	VW3A5506
75	*100*	**ATV930D75M3C**	VX5VPS6001	VW3A95116	VW3A9704	–	–	–	–	VW3A4710	–	VW3A5307	–	VW3A5407 *(1)*	–	VW3A5506
Three-phase supply voltage: 380...480 V 50/60 Hz - IP21/UL Type 1 with braking unit																
0.75	–	**ATV930U07N4**	VX5VPS1001	NSYPTDS1	–	VW3A46101	VW3A46120	VW3A46139	VW3A46158	VW3A4701	VW3A47901	VW3A5301	VW3A53902	VW3A5401	VW3A53901	VW3A5502
1.5	*2*	**ATV930U15N4**	VX5VPS1001	NSYPTDS1	–	VW3A46101	VW3A46120	VW3A46139	VW3A46158	VW3A4701	VW3A47901	VW3A5301	VW3A53902	VW3A5401	VW3A53901	VW3A5502
2.2	*3*	**ATV930U22N4**	VX5VPS1001	NSYPTDS1	–	VW3A46101	VW3A46120	VW3A46139	VW3A46158	VW3A4701	VW3A47901	VW3A5301	VW3A53902	VW3A5401	VW3A53901	VW3A5502
3	–	**ATV930U30N4**	VX5VPS1001	NSYPTDS1	–	VW3A46101	VW3A46120	VW3A46139	VW3A46158	VW3A4702	VW3A47902	VW3A5302	VW3A53902	VW3A5402	VW3A53901	VW3A5502
4	*5*	**ATV930U40N4**	VX5VPS1001	NSYPTDS1	–	VW3A46102	VW3A46121	VW3A46140	VW3A46159	VW3A4702	VW3A47902	VW3A5302	VW3A53902	VW3A5402	VW3A53901	VW3A5502
5.5	*7.5*	**ATV930U55N4**	VX5VPS1001	NSYPTDS1	–	VW3A46102	VW3A46121	VW3A46140	VW3A46159	VW3A4702	VW3A47902	VW3A5302	VW3A53902	VW3A5402	VW3A53901	VW3A5502
7.5	*10*	**ATV930U75N4**	VX5VPS2001	NSYPTDS2	–	VW3A46103	VW3A46122	VW3A46141	VW3A46160	VW3A4703	VW3A47903	VW3A5303	VW3A53902	VW3A5403	VW3A53902	VW3A5502
11	*15*	**ATV930D11N4**	VX5VPS2001	NSYPTDS2	–	VW3A46104	VW3A46123	VW3A46142	VW3A46161	VW3A4703	VW3A47903	VW3A5303	VW3A53902	VW3A5403	VW3A53902	VW3A5502
15	*20*	**ATV930D15N4**	VX5VPS3001	NSYPTDS3	–	VW3A46105	VW3A46124	VW3A46143	VW3A46162	VW3A4703	VW3A47903	VW3A5304	VW3A53903	VW3A5404	VW3A53903	VW3A5504
18.5	*25*	**ATV930D18N4**	VX5VPS3001	NSYPTDS3	–	VW3A46106	VW3A46125	VW3A46144	VW3A46163	VW3A4704	VW3A47904	VW3A5304	VW3A53903	VW3A5404	VW3A53903	VW3A5504
22	*30*	**ATV930D22N4**	VX5VPS3001	NSYPTDS3	–	VW3A46107	VW3A46126	VW3A46145	VW3A46164	VW3A4704	VW3A47904	VW3A5304	VW3A53903	VW3A5404	VW3A53903	VW3A5504
30	*40*	**ATV930D30N4**	VX5VPS4001	NSYPTDS4	–	VW3A46108	VW3A46127	VW3A46146	VW3A46165	VW3A4705	VW3A47905	VW3A5305	VW3A53905	VW3A5405	VW3A53904	VW3A5504
37	*50*	**ATV930D37N4**	VX5VPS4001	NSYPTDS4	–	VW3A46109	VW3A46128	VW3A46147	VW3A46166	VW3A4706	VW3A47906	VW3A5305	VW3A53905	VW3A5405	VW3A53904	VW3A5504
45	*60*	**ATV930D45N4**	VX5VPS4001	NSYPTDS4	–	VW3A46110	VW3A46129	VW3A46148	VW3A46167	VW3A4706	VW3A47906	VW3A5305	VW3A53905	VW3A5405	VW3A53904	VW3A5504
55	*75*	**ATV930D55N4**	VX5VPS5001	NSYPTDS5	–	VW3A46111	VW3A46130	VW3A46149	VW3A46168	VW3A4707	VW3A47907	VW3A5306	–	VW3A5406	–	VW3A5504
75	*100*	**ATV930D75N4**	VX5VPS5001	NSYPTDS5	–	VW3A46112	VW3A46131	VW3A46150	VW3A46169	VW3A4708	VW3A47908	VW3A5306	–	VW3A5406	–	VW3A5504
90	*125*	**ATV930D90N4**	VX5VPS5001	NSYPTDS5	–	VW3A46113	VW3A46132	VW3A46151	VW3A46170	VW3A4708	VW3A47908	VW3A5306	–	VW3A5406	–	VW3A5504
110	*150*	**ATV930C11N4**	VX5VPS6001	VW3A95116	–	VW3A46114	VW3A46133	VW3A46152	VW3A46171	VW3A4709	–	VW3A5307	–	–	–	VW3A5505, VW3A5506
132	*200*	**ATV930C13N4**	VX5VPS6001	VW3A95116	–	VW3A46115	VW3A46134	VW3A46153	VW3A46172	VW3A4709	–	VW3A5307	–	VW3A5406	–	VW3A5505, VW3A5506
160	*250*	**ATV930C16N4**	VX5VPS6001	VW3A95116	–	VW3A46116	VW3A46135	VW3A46154	VW3A46173	VW3A4710	–	VW3A5307	–	VW3A5406	–	VW3A5505, VW3A5506
220	*350*	**ATV930C22N4**	VZ3V1212 *(3)*	VW3A9513	VW3A9212	VW3A46118	VW3A46137	VW3A46155	VW3A46174	VW3A4411	–	VW3A5106	–	VW3A5209	–	–
Three-phase supply voltage: 380...480 V 50/60 Hz - IP21/UL Type 1 without braking unit																
55	*75*	**ATV930D55N4C**	VX5VPS5001	NSYPTDS5	–	VW3A46111	VW3A46130	VW3A46149	VW3A46168	VW3A4707	VW3A47907	VW3A5306	–	VW3A5406	–	VW3A5504
75	*100*	**ATV930D75N4C**	VX5VPS5001	NSYPTDS5	–	VW3A46112	VW3A46131	VW3A46150	VW3A46169	VW3A4708	VW3A47908	VW3A5306	–	VW3A5406	–	VW3A5504
90	*125*	**ATV930D90N4C**	VX5VPS5001	NSYPTDS5	–	VW3A46113	VW3A46132	VW3A46151	VW3A46170	VW3A4708	VW3A47908	VW3A5306	–	VW3A5406	–	VW3A5504
110	*150*	**ATV930C11N4C**	VX5VPS6001	VW3A95116	VW3A9704	VW3A46114	VW3A46133	VW3A46152	VW3A46171	VW3A4709	–	VW3A5307	–	–	–	VW3A5505, VW3A5506
132	*200*	**ATV930C13N4C**	VX5VPS6001	VW3A95116	VW3A9704	VW3A46115	VW3A46134	VW3A46153	VW3A46172	VW3A4709	–	VW3A5307	–	VW3A5407 *(1)*	–	VW3A5505, VW3A5506
160	*250*	**ATV930C16N4C**	VX5VPS6001	VW3A95116	VW3A9704	VW3A46116	VW3A46135	VW3A46154	VW3A46173	VW3A4710	–	VW3A5307	–	VW3A5407 *(1)*	–	VW3A5505, VW3A5506
220	*350*	**ATV930C22N4C**	VZ3V1212 *(3)*	VW3A9513	VW3A9212	VW3A46118	VW3A46137	VW3A46155	VW3A46174	VW3A4411	–	VW3A5106	–	VW3A5209 *(1)*	–	–
250	*400*	**ATV930C25N4C**	VZ3V1212 *(3)*	VW3A9514 VW3A9515 *(4)*	VW3A9213 *(5)*	VW3A46119	VW3A46138	VW3A46157	VW3A46176	VW3A4411	–	VW3A5107	–	VW3A5210 *(1)*	–	–
315	*500*	**ATV930C31N4C**	VZ3V1212 *(3)*	VW3A9514 VW3A9515 *(4)*	VW3A9213 *(5)*	2 x VW3A46116	2 x VW3A46135	2 x VW3A46153	2 x VW3A46172	VW3A4411	–	VW3A5107	–	VW3A5210 *(1)*	–	–
Pages		2/2	2/12	2/13	2/13	2/44	2/46	2/49	2/50	2/51	2/52	2/54	2/55	2/56	2/57	2/58

(1) In "Normal Duty", apply a derating of Pn-1 to the drive nominal power with a minimum switching frequency of 4 kHz. For example: an ATV630D75M3 drive with sinus filter can be used on a 55 kW motor.
(2) Maximum length of unshielded cable: 300 m/984 ft. For other lengths or for shielded cables, see page 2/58.
(3) Electronic power fan for drive, with 1 unit for ATV930C22N4(C), 2 units for ATV930C25N4C, and 3 units for ATV930C31N4C.
(4) With braking unit.
(5) Without braking unit.

Variable speed drives

Altivar Process ATV900

Options for ATV930●●●Y6 and ATV930●●●N4Z drives

Table showing possible combinations of options for ATV930●●●Y6 drives

Motor		Drive	Accessories			Options												
			Fan kit	Flange-mounting kit	UL Type 1 conformity kit	Passive filters (50 Hz)		Passive filters (60 Hz)		Line chokes	EMC filters		dv/dt filters		Sinus filter		Common mode filter
kW	*HP*					THDi < 10%	THDi < 5%	THDi < 10%	THDi < 5%	THDi < 48%	Filter	IP21 kit	Filter	IP20 kit	Filter	IP21 kit	
Three-phase supply voltage: 500…690 V 50/60 Hz - IP20/UL Type 1																	
1.5	*2*	**ATV930U22Y6**	VX5VPS3002	–	VW3A9705	–	–	–	–	VW3A4551	*(1)*	–	VW3A5103, 5104	–	VW3A5215	–	–
2.2	*3*	**ATV930U30Y6**	VX5VPS3002	–	VW3A9705	–	–	–	–	VW3A4551	*(1)*	–	VW3A5103, 5104	–	VW3A5215	–	–
3	–	**ATV930U40Y6**	VX5VPS3002	–	VW3A9705	–	–	–	–	VW3A4551	*(1)*	–	VW3A5103, 5104	–	VW3A5215	–	–
4	*5*	**ATV930U55Y6**	VX5VPS3002	–	VW3A9705	–	–	–	–	VW3A4552	*(1)*	–	VW3A5103, 5104	–	VW3A5215	–	–
5.5	*7.5*	**ATV930U75Y6**	VX5VPS3002	–	VW3A9705	–	–	–	–	VW3A4552	*(1)*	–	VW3A5103, 5104	–	VW3A5215	–	–
7.5	*10*	**ATV930D11Y6**	VX5VPS3002	–	VW3A9705	–	–	–	–	VW3A4553	*(1)*	–	VW3A5104	–	VW3A5216	–	–
11	*15*	**ATV930D15Y6**	VX5VPS3002	–	VW3A9705	–	–	–	–	VW3A4553	*(1)*	–	VW3A5104	–	VW3A5216	–	–
15	*20*	**ATV930D18Y6**	VX5VPS3002	–	VW3A9705	–	–	–	–	VW3A4554	*(1)*	–	VW3A5104	–	VW3A5216	–	–
18.5	*25*	**ATV930D22Y6**	VX5VPS3002	–	VW3A9705	–	–	–	–	VW3A4554	*(1)*	–	VW3A5104	–	VW3A5216	–	–
22	*30*	**ATV930D30Y6**	VX5VPS3002	–	VW3A9705	–	–	–	–	VW3A4555	*(1)*	–	VW3A5104	–	VW3A5217	–	–
30	*40*	**ATV930D37Y6**	VX5VPS5002	–	VW3A9706	–	–	–	–	VW3A4555	*(1)*	–	VW3A5104	–	VW3A5217	–	–
37	*50*	**ATV930D45Y6**	VX5VPS5002	–	VW3A9706	–	–	–	–	VW3A4555	*(1)*	–	VW3A5104	–	VW3A5218	–	–
45	*60*	**ATV930D55Y6**	VX5VPS5002	–	VW3A9706	–	–	–	–	VW3A4556	*(1)*	–	VW3A5104	–	VW3A5218	–	–
55	*75*	**ATV930D75Y6**	VX5VPS5002	–	VW3A9706	–	–	–	–	VW3A4556	*(1)*	–	VW3A5104	–	VW3A5219	–	–
75	*100*	**ATV930D90Y6**	VX5VPS5002	–	VW3A9706	–	–	–	–	VW3A4556	*(1)*	–	VW3A5104	–	VW3A5219	–	–
Three phase supply voltage: 380…480 V 50/60 Hz - IP20																	
0.75	–	**ATV930U07N4Z**	VX5VPS1001	NSYPTDS1	–	VW3A46101	VW3A46120	VW3A46139	VW3A46158	–	VW3A4701	VW3A47901	VW3A5301	VW3A53902	VW3A5401	VW3A53901	VW3A5502
1.5	*2*	**ATV930U15N4Z**	VX5VPS1001	NSYPTDS1	–	VW3A46101	VW3A46120	VW3A46139	VW3A46158	–	VW3A4701	VW3A47901	VW3A5301	VW3A53902	VW3A5401	VW3A53901	VW3A5502
2.2	*3*	**ATV930U22N4Z**	VX5VPS1001	NSYPTDS1	–	VW3A46101	VW3A46120	VW3A46139	VW3A46158	–	VW3A4701	VW3A47901	VW3A5301	VW3A53902	VW3A5401	VW3A53901	VW3A5502
3	–	**ATV930U30N4Z**	VX5VPS1001	NSYPTDS1	–	VW3A46101	VW3A46120	VW3A46139	VW3A46158	–	VW3A4702	VW3A47902	VW3A5302	VW3A53902	VW3A5402	VW3A53901	VW3A5502
4	*5*	**ATV930U40N4Z**	VX5VPS1001	NSYPTDS1	–	VW3A46102	VW3A46121	VW3A46140	VW3A46159	–	VW3A4702	VW3A47902	VW3A5302	VW3A53902	VW3A5402	VW3A53901	VW3A5502
5.5	*7.5*	**ATV930U55N4Z**	VX5VPS1001	NSYPTDS1	–	VW3A46102	VW3A46121	VW3A46140	VW3A46159	–	VW3A4702	VW3A47902	VW3A5302	VW3A53902	VW3A5402	VW3A53901	VW3A5502
7.5	*10*	**ATV930U75N4Z**	VX5VPS2001	NSYPTDS2	–	VW3A46103	VW3A46122	VW3A46141	VW3A46160	–	VW3A4703	VW3A47903	VW3A5303	VW3A53902	VW3A5403	VW3A53902	VW3A5502
11	*15*	**ATV930D11N4Z**	VX5VPS2001	NSYPTDS2	–	VW3A46104	VW3A46123	VW3A46142	VW3A46161	–	VW3A4703	VW3A47903	VW3A5303	VW3A53902	VW3A5403	VW3A53902	VW3A5502
15	*20*	**ATV930D15N4Z**	VX5VPS3001	NSYPTDS3	–	VW3A46105	VW3A46124	VW3A46143	VW3A46162	–	VW3A4703	VW3A47903	VW3A5304	VW3A53903	VW3A5404	VW3A53903	VW3A5504
18.5	*25*	**ATV930D18N4Z**	VX5VPS3001	NSYPTDS3	–	VW3A46106	VW3A46125	VW3A46144	VW3A46163	–	VW3A4704	VW3A47904	VW3A5304	VW3A53903	VW3A5404	VW3A53903	VW3A5504
22	*30*	**ATV930D22N4Z**	VX5VPS3001	NSYPTDS3	–	VW3A46107	VW3A46126	VW3A46145	VW3A46164	–	VW3A4704	VW3A47904	VW3A5304	VW3A53903	VW3A5404	VW3A53903	VW3A5504
Three phase supply voltage: 380…480 V 50/60 Hz - IP00																	
30	*40*	**ATV930D30N4Z**	VX5VPS4001	NSYPTDS4	–	VW3A46108	VW3A46127	VW3A46146	VW3A46165	–	VW3A4705	VW3A47905	VW3A5305	VW3A53905	VW3A5405	VW3A53904	VW3A5504
37	*50*	**ATV930D37N4Z**	VX5VPS4001	NSYPTDS4	–	VW3A46109	VW3A46128	VW3A46147	VW3A46166	–	VW3A4706	VW3A47906	VW3A5305	VW3A53905	VW3A5405	VW3A53904	VW3A5504
45	*60*	**ATV930D45N4Z**	VX5VPS1001	NSYPTDS4	–	VW3A46110	VW3A46129	VW3A46148	VW3A46167	–	VW3A4706	VW3A47906	VW3A5305	VW3A53905	VW3A5405	VW3A53904	VW3A5504
55	*75*	**ATV930D55N4Z**	VX5VPS5001	NSYPTDS5	–	VW3A46111	VW3A46130	VW3A46149	VW3A46168	–	VW3A4707	VW3A47907	VW3A5306	–	VW3A5406	–	VW3A5504
75	*100*	**ATV930D75N4Z**	VX5VPS5001	NSYPTDS5	–	VW3A46112	VW3A46131	VW3A46150	VW3A46169	–	VW3A4708	VW3A47908	VW3A5306	–	VW3A5406	–	VW3A5504
90	*125*	**ATV930D90N4Z**	VX5VPS5001	NSYPTDS5	–	VW3A46113	VW3A46132	VW3A46151	VW3A46170	–	VW3A4708	VW3A47908	VW3A5306	–	VW3A5406	–	VW3A5504
Pages			2/2	2/12	2/13	2/13	2/44	2/46	2/48	2/49	2/52	2/50	2/51	2/53	2/55	2/56	2/57	2/58

(1) Please consult our Customer Care Teams.

Variable speed drives

Altivar Process ATV900

Options for ATV950●●●N4/N4E drives

Table showing possible combinations of options for ATV950●●●N4/N4E drives

Motor		Drive	Accessories			Options										
			Fan kit	Flange-mounting kit	IP21/UL Type 1 conformity kit	Passive filters (50 Hz)		Passive filters (60 Hz)		EMC filters		dv/dt filters		Sinus filter		Common mode filters *(2)*
kW	*HP*					THDi < 10%	THDi < 5%	THDi < 10%	THDi < 5%	Filter	IP21 kit	Filter	IP21 kit	Filter	IP21 kit	
Three-phase supply voltage: 380...480 V 50/60 Hz - IP55																
0.75	*1*	**ATV950U07N4**	VX5VPS1001	–	–	VW3A46101 *(1)*	VW3A46120 *(1)*	VW3A46139 *(1)*	VW3A46158 *(1)*	VW3A4701	–	VW3A5301	–	VW3A5401 *(1)*	–	VW3A5502
1.5	*2*	**ATV950U15N4**	VX5VPS1001	–	–	VW3A46101 *(1)*	VW3A46120 *(1)*	VW3A46139 *(1)*	VW3A46158 *(1)*	VW3A4701	–	VW3A5301	–	VW3A5401 *(1)*	–	VW3A5502
2.2	*3*	**ATV950U22N4**	VX5VPS1001	–	–	VW3A46101 *(1)*	VW3A46120 *(1)*	VW3A46139 *(1)*	VW3A46158 *(1)*	VW3A4701	–	VW3A5301	–	VW3A5401 *(1)*	–	VW3A5502
3	–	**ATV950U30N4**	VX5VPS1001	–	–	VW3A46101 *(1)*	VW3A46120 *(1)*	VW3A46139 *(1)*	VW3A46158 *(1)*	VW3A4702	–	VW3A5302	–	VW3A5402 *(1)*	–	VW3A5502
4	*5*	**ATV950U40N4**	VX5VPS1001	–	–	VW3A46102 *(1)*	VW3A46121 *(1)*	VW3A46140 *(1)*	VW3A46159 *(1)*	VW3A4702	–	VW3A5302	–	VW3A5402 *(1)*	–	VW3A5502
5.5	*7.5*	**ATV950U55N4**	VX5VPS1001	–	–	VW3A46102 *(1)*	VW3A46121 *(1)*	VW3A46140 *(1)*	VW3A46159 *(1)*	VW3A4702	–	VW3A5302	–	VW3A5402 *(1)*	–	VW3A5502
7.5	*10*	**ATV950U75N4**	VX5VPS2001	–	–	VW3A46103 *(1)*	VW3A46122 *(1)*	VW3A46141 *(1)*	VW3A46160 *(1)*	VW3A4703	–	VW3A5303	–	VW3A5403 *(1)*	–	VW3A5502
11	*15*	**ATV950D11N4**	VX5VPS2001	–	–	VW3A46104 *(1)*	VW3A46123 *(1)*	VW3A46142 *(1)*	VW3A46161 *(1)*	VW3A4703	–	VW3A5303	–	VW3A5403 *(1)*	–	VW3A5502
15	*20*	**ATV950D15N4**	VX5VPS3001	–	–	VW3A46105 *(1)*	VW3A46124 *(1)*	VW3A46143 *(1)*	VW3A46162 *(1)*	VW3A4703	–	VW3A5304	–	VW3A5404 *(1)*	–	VW3A5504
18.5	*25*	**ATV950D18N4**	VX5VPS3001	–	–	VW3A46106 *(1)*	VW3A46125 *(1)*	VW3A46144 *(1)*	VW3A46163 *(1)*	VW3A4704	–	VW3A5304	–	VW3A5404 *(1)*	–	VW3A5504
22	*30*	**ATV950D22N4**	VX5VPS3001	–	–	VW3A46107 *(1)*	VW3A46126 *(1)*	VW3A46145 *(1)*	VW3A46164 *(1)*	VW3A4704	–	VW3A5304	–	VW3A5404 *(1)*	–	VW3A5504
30	*40*	**ATV950D30N4**	VX5VPS4001	–	–	VW3A46108 *(1)*	VW3A46127 *(1)*	VW3A46146 *(1)*	VW3A46165 *(1)*	VW3A4705	–	VW3A5305	–	VW3A5405 *(1)*	–	VW3A5504
37	*50*	**ATV950D37N4**	VX5VPS4001	–	–	VW3A46109 *(1)*	VW3A46128 *(1)*	VW3A46147 *(1)*	VW3A46166 *(1)*	VW3A4706	–	VW3A5305	–	VW3A5405 *(1)*	–	VW3A5504
45	*60*	**ATV950D45N4**	VX5VPS4001	–	–	VW3A46110 *(1)*	VW3A46129 *(1)*	VW3A46148 *(1)*	VW3A46167 *(1)*	VW3A4706	–	VW3A5305	–	VW3A5405 *(1)*	–	VW3A5504
55	*75*	**ATV950D55N4**	VX5VPS5001	–	–	VW3A46111 *(1)*	VW3A46130 *(1)*	VW3A46149 *(1)*	VW3A46168 *(1)*	VW3A4707	–	VW3A5306	–	VW3A5406 *(1)*	–	VW3A5504
75	*100*	**ATV950D75N4**	VX5VPS5001	–	–	VW3A46112 *(1)*	VW3A46131 *(1)*	VW3A46150 *(1)*	VW3A46169 *(1)*	VW3A4708	–	VW3A5306	–	VW3A5406 *(1)*	–	VW3A5504
90	*125*	**ATV950D90N4**	VX5VPS5001	–	–	VW3A46113 *(1)*	VW3A46132 *(1)*	VW3A46151 *(1)*	VW3A46170 *(1)*	VW3A4708	–	VW3A5306	–	VW3A5406 *(1)*	–	VW3A5504
Three-phase supply voltage: 380...480 V 50/60 Hz - IP55 with Vario disconnect switch																
0.75	*1*	**ATV950U07N4E**	VX5VPS1001	–	–	VW3A46101 *(1)*	VW3A46120 *(1)*	VW3A46139 *(1)*	VW3A46158 *(1)*	VW3A4701	–	VW3A5301	–	VW3A5401 *(1)*	–	VW3A5502
1.5	*2*	**ATV950U15N4E**	VX5VPS1001	–	–	VW3A46101 *(1)*	VW3A46120 *(1)*	VW3A46139 *(1)*	VW3A46158 *(1)*	VW3A4701	–	VW3A5301	–	VW3A5401 *(1)*	–	VW3A5502
2.2	*3*	**ATV950U22N4E**	VX5VPS1001	–	–	VW3A46101 *(1)*	VW3A46120 *(1)*	VW3A46139 *(1)*	VW3A46158 *(1)*	VW3A4701	–	VW3A5301	–	VW3A5401 *(1)*	–	VW3A5502
3	–	**ATV950U30N4E**	VX5VPS1001	–	–	VW3A46101 *(1)*	VW3A46120 *(1)*	VW3A46139 *(1)*	VW3A46158 *(1)*	VW3A4702	–	VW3A5302	–	VW3A5402 *(1)*	–	VW3A5502
4	*5*	**ATV950U40N4E**	VX5VPS1001	–	–	VW3A46102 *(1)*	VW3A46121 *(1)*	VW3A46140 *(1)*	VW3A46159 *(1)*	VW3A4702	–	VW3A5302	–	VW3A5402 *(1)*	–	VW3A5502
5.5	*7.5*	**ATV950U55N4E**	VX5VPS1001	–	–	VW3A46102 *(1)*	VW3A46121 *(1)*	VW3A46140 *(1)*	VW3A46159 *(1)*	VW3A4702	–	VW3A5302	–	VW3A5402 *(1)*	–	VW3A5502
7.5	*10*	**ATV950U75N4E**	VX5VPS2001	–	–	VW3A46103 *(1)*	VW3A46122 *(1)*	VW3A46141 *(1)*	VW3A46160 *(1)*	VW3A4703	–	VW3A5303	–	VW3A5403 *(1)*	–	VW3A5502
11	*15*	**ATV950D11N4E**	VX5VPS2001	–	–	VW3A46104 *(1)*	VW3A46123 *(1)*	VW3A46142 *(1)*	VW3A46161 *(1)*	VW3A4703	–	VW3A5303	–	VW3A5403 *(1)*	–	VW3A5502
15	*20*	**ATV950D15N4E**	VX5VPS3001	–	–	VW3A46105 *(1)*	VW3A46124 *(1)*	VW3A46143 *(1)*	VW3A46162 *(1)*	VW3A4703	–	VW3A5304	–	VW3A5404 *(1)*	–	VW3A5504
18.5	*25*	**ATV950D18N4E**	VX5VPS3001	–	–	VW3A46106 *(1)*	VW3A46125 *(1)*	VW3A46144 *(1)*	VW3A46163 *(1)*	VW3A4704	–	VW3A5304	–	VW3A5404 *(1)*	–	VW3A5504
22	*30*	**ATV950D22N4E**	VX5VPS3001	–	–	VW3A46107 *(1)*	VW3A46126 *(1)*	VW3A46145 *(1)*	VW3A46164 *(1)*	VW3A4704	–	VW3A5304	–	VW3A5404 *(1)*	–	VW3A5504
30	*40*	**ATV950D30N4E**	VX5VPS4001	–	–	VW3A46108 *(1)*	VW3A46127 *(1)*	VW3A46146 *(1)*	VW3A46165 *(1)*	VW3A4705	–	VW3A5305	–	VW3A5405 *(1)*	–	VW3A5504
37	*50*	**ATV950D37N4E**	VX5VPS4001	–	–	VW3A46109 *(1)*	VW3A46128 *(1)*	VW3A46147 *(1)*	VW3A46166 *(1)*	VW3A4706	–	VW3A5305	–	VW3A5405 *(1)*	–	VW3A5504
45	*60*	**ATV950D45N4E**	VX5VPS4001	–	–	VW3A46110 *(1)*	VW3A46129 *(1)*	VW3A46148 *(1)*	VW3A46167 *(1)*	VW3A4706	–	VW3A5305	–	VW3A5405 *(1)*	–	VW3A5504
55	*75*	**ATV950D55N4E**	VX5VPS5001	–	–	VW3A46111 *(1)*	VW3A46130 *(1)*	VW3A46149 *(1)*	VW3A46168 *(1)*	VW3A4707	–	VW3A5306	–	VW3A5406 *(1)*	–	VW3A5504
75	*100*	**ATV950D75N4E**	VX5VPS5001	–	–	VW3A46112 *(1)*	VW3A46131 *(1)*	VW3A46150 *(1)*	VW3A46169 *(1)*	VW3A4708	–	VW3A5306	–	VW3A5406 *(1)*	–	VW3A5504
90	*125*	**ATV950D90N4E**	VX5VPS5001	–	–	VW3A46113 *(1)*	VW3A46132 *(1)*	VW3A46151 *(1)*	VW3A46170 *(1)*	VW3A4708	–	VW3A5306	–	VW3A5406 *(1)*	–	VW3A5504
Pages		2/2	2/12	–	–	2/44	2/46	2/48	2/49	2/50	–	2/53	–	2/56	–	2/58

(1) When used with ATV950U07N4/N4E...D90N4/N4E drives, the filter must be mounted in a separate enclosure to maintain IP55 protection for the installation.

(2) Maximum length of unshielded cable: 300 m/984 ft. For other lengths or for shielded cables, see page 2/58.

2

Module compatibility table

Description	Reference	Slot	Page
Safety modules			
Description	**Reference**	**Slot**	**Page**
Safety module advanced	VW3A3802	C *(2)*	2/25
CIP safety module	VW3A3809	C *(2)*	2/26
Encoder interface modules			
Description	**Reference**	**Slot**	**Page**
Digital encoder interface module	VW3A3420	B	2/28
Analog encoder interface module	VW3A3422	B	2/28
Resolver interface module	VW3A3423	B	2/28
HTL encoder interface module	VW3A3424	B	2/28
Additional I/O modules			
Description	**Reference**	**Slot**	**Page**
Extended I/O module *(1)*	VW3A3203	A or B	2/29
Extended relay module *(1)*	VW3A3204	A or B	2/29
Fieldbus modules			
Description	**Reference**	**Slot**	**Page**
CANopen daisy chain	VW3A3608	A	2/33
CANopen SUB-D	VW3A3618	A	2/33
CANopen screw terminal block	VW3A3628	A	2/34
PROFINET	VW3A3627	A	2/35
PROFIBUS DP V1	VW3A3607	A	2/35
POWERLINK Network	VW3A3619	A	2/35
EtherCAT	VW3A3601	A	2/35
DeviceNet	VW3A3609	A	2/35

(1) These references can be used only once per drive, e.g. VW3A3203 in slot A and VW3A3204 in slot B.
(2) The Altivar 900 drive must be equipped with an additional module support VW3A3800 (see page 2/26).

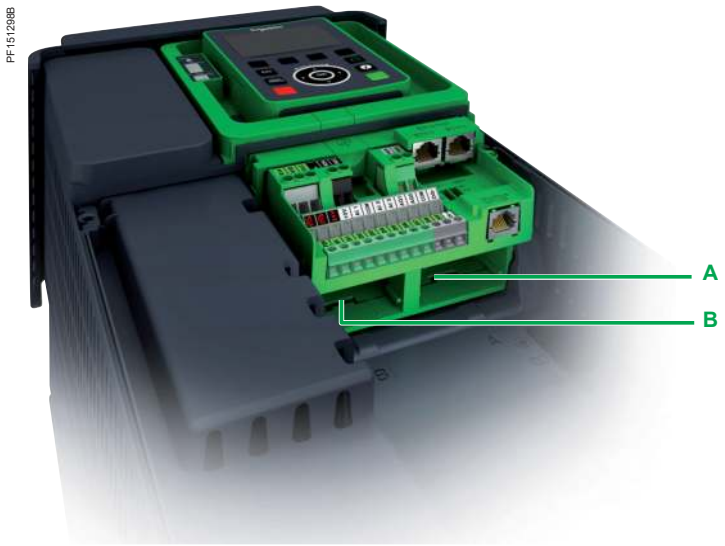

Altivar Process drives slots

Variable speed drives

Altivar Process ATV900

Option: Safety module advanced

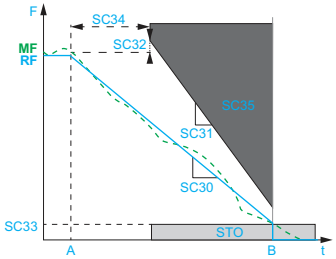

Activation of the SS1 function

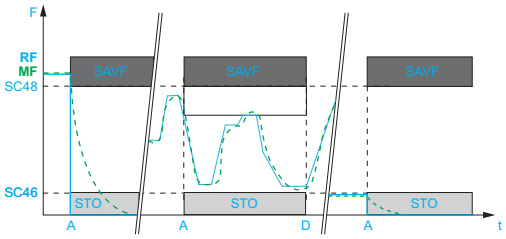

Activation of the SLS function

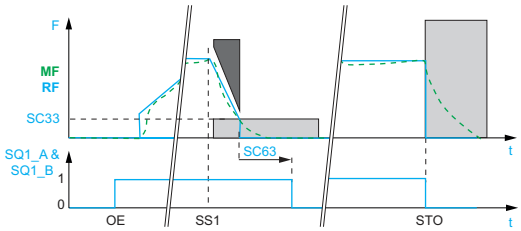

Activation of the SBC function

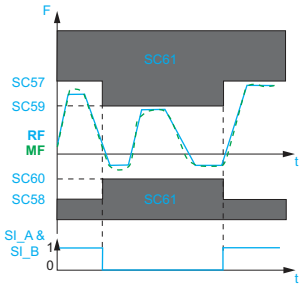

Activation of the SMS function

VW3A3802 safety module

VW3M8820 connector

Presentation

The safety module advanced allows Altivar 900 variable speed drives to access additional safety functions.
This offers a complex functional safety device that helps to provide installation monitoring.

The safety module advanced optimizes the overall cost of the installation by avoiding the need for additional external devices, while conforming to international safety standards. As a result, wiring is cheaper and quicker.

It includes the following safety functions compliant with the IEC/EN 61800-5-2 standard:
- Safe Stop 1 (SS1)
- Safe Limited Speed (SLS)
- Safe Brake Control (SBC)

The safety module also includes two additional safety functions:
- Safe Maximum Speed (SMS)
- Guard Door Locking (GDL)

The Altivar 900 drive must be equipped with an additional module support (VW3A3800) to be able to insert the safety module (VW3A3802).

Safety functions

Safe Stop 1 (SS1) function

The SS1 integrated safety function causes a category 1 safe stop.
This function monitors the deceleration according to a dedicated deceleration ramp and shuts off the torque once standstill has been achieved.

Safely Limited Speed (SLS) function

The SLS integrated safety function can be initiated by activation of safety function inputs. This function prevents the motor from exceeding the specified speed limit.
If the motor speed exceeds the specified speed limit value, safety function STO is triggered.

Safe Brake Control (SBC) function

The SBC integrated safety function provides an output signal to command an external relay in order to control external brakes.

Safe Maximum Speed (SMS) function

This function prevents the speed of the motor from exceeding the predefined speed limit.
- Two different speed limits can be defined and can be selected by logic inputs.
- If the motor speed exceeds the predefined speed limit value, safety function STO is triggered.

Once the SMS function is configured, it is continuously active.

Guard Door Locking (GDL) function

The GDL function allows the guard door lock to be released when the motor power is turned off.

References

Description	Power supply	Cable length	Unit reference	Weight
	V	m/*ft*		kg/*lb*
Safety module advanced *(1)*	24 V ⎓	–	VW3A3802	-
Cordset Preassembled with 1 x 24-way female connectors (safety module end) and a free end	–	3/ *9.84*	VW3M8801R30	0.020/ *0.040*
Cordsets Preassembled with 2 x 24-way female connectors	–	1.5/ *4.92*	VW3M8802R15	0.020/ *0.040*
		3/ *9.84*	VW3M8802R30	0.150/ *0.331*
Safety module distribution unit Connection terminal adapter for safety module advanced, for easy wiring of several safety modules in the control cabinet (equipped with 5 connectors)	–	–	VW3M8810	–
Removable connector To connect an additional safety module advanced distribution unit **Sold in lots of 4**	–	–	VW3M8820	–

(1) The Altivar 900 drive must be equipped with an additional module support (VW3A3800) to be able to insert the safety module (VW3A3802).

Variable speed drives

Altivar Process ATV900

Option: CIP Safety module

Presentation

The CIP Safety module allows Altivar ATV900 variable speed drives to provide a fail-safe Ethernet connection between the drive and a Safey PLC using the CIP Safety protocol over Ethernet/IP.

ATV900 is connected over Ethernet via its embedded Ethernet/IP connection to communicate with the CIP Safety module via tunneling functionality.

It includes the following safety function, compliant with the IEC/EN 61800-5-2 standard:

- Safe Torque Off (STO) function SIL3/Ple

The Altivar 900 drive must be equipped with an additional module support (VW3A3800) to be able to insert the CIP Safety module (VW3A3809).

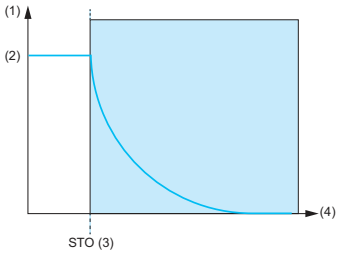

Activation of the STO function
(1) Motor speed
(2) Actual speed
(3) STO function trigged from CIP Safety over Ethernet/IP by command safe word
(4) Time

Safety functions

Safe Torque Off (STO) function

The CIP safety module activates the integrated STO safety function of the drive. This function ensures that no power that could cause torque or force is supplied to the motor.

Safety profile

Safety I/O

- ■ Three connections
- □ Ethernet/IP: 1 x CIP I/O
- □ CIP Safety: 1 x safety input and 1 x safety ouput

Safety Open type

- ■ Type 2a
- ■ Type 2b

Conformity test

- ■ ODVA CT18-ES

VW3A3809_Main

VW3A3809 CIP Safety module

References

Description	Unit reference	Weight
		kg/*lb*
CIP Safety module *(3)*	VW3A3809 *(1) (2)*	0.150/ *0.331*

(1) Please refer to ATV900 CIP Safety Manual for firmware compatibility.
(2) The Altivar ATV900 drive must be equipped with an additional module support VW3A3800 to be able to insert the CIP Safety module VW3A3809.

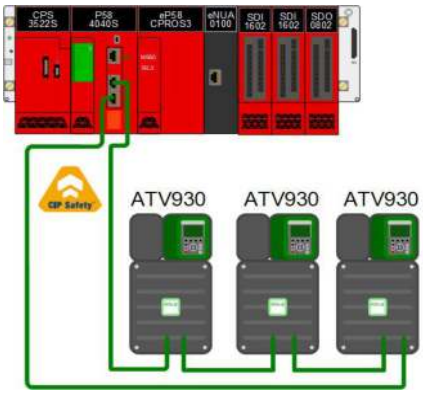

Example of CIP Safety architecture with ATV930 drives

Variable speed drives
Altivar Process ATV900
Option: Additional module support

VW3A3800 additional module support

Presentation

The additional module support provides ATV900 drives with a third slot for optional modules such as safety modules.

The Altivar 900 drive must be equipped with an additional module support VW3A3800 to be able to insert the safety module advanced VW3A3802 or the CIP Safety module VW3A3809.

References

Description		Reference
Additional module support	For use with the whole ATV900 range	**VW3A3800**

Integration of safety function modules

Safety function modules allow Altivar 900 variable speed drives to access additional safety functions.

Example of integration of a Safety module advanced VW3A3802 in an ATV930D45N4 drive:

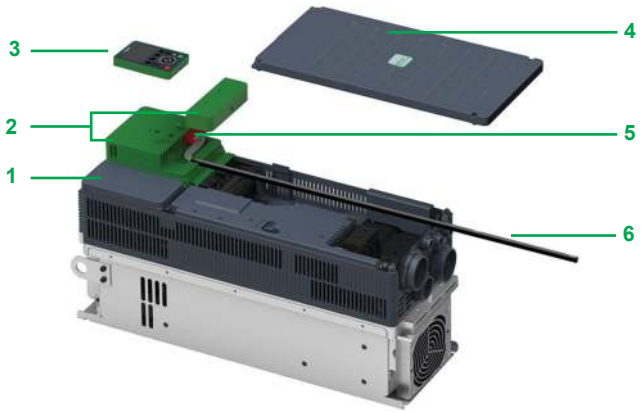

1 ATV930D45N4
2 Additional module support VW3A3800
3 Graphic display terminal VW3A1111
4 Front cover
5 Safety module advanced VW3A3802
6 Cordset

Modules that require the additional module support

Description	Reference
Safety module advanced	**VW3A3802**
CIP Safety module	**VW3A3809**

Variable speed drives

Altivar Process ATV900

Option: Encoder interface modules

VW3A3420 digital encoder interface module

VW3A3422 analog encoder interface module

VW3A3423 resolver interface module

VW3A3424 HTL encoder interface module

Presentation

Encoder interface modules are used for flux vector control operation with sensor (FVC mode) for asynchronous motors, or for vector control operation with speed feedback (FSY mode) for synchronous motors.
They improve drive performance irrespective of the motor load state:
- Zero speed torque
- Accurate speed regulation
- Torque accuracy
- Shorter response times on a torque surge
- Improved dynamic performance in transient state

For asynchronous motors, in the other control modes (voltage vector control, voltage/frequency ratio), encoder interface modules improve static speed accuracy.

Depending on the model, encoder interface modules can also be used for monitoring, irrespective of the control type:
- Overspeed detection
- Load slipping detection

They can also transmit a reference value provided by the encoder input to the Altivar variable speed drive. This specific feature is used to synchronize the speed of several drives. The encoder options have a thermal sensor input to monitor one standard temperature sensor.

Four modules are available depending on the encoder technology:
- Encoder with digital output
- Encoder with analog output
- Resolver interface
- HTL encoder interface

The Altivar variable speed drive can only be equipped with one of the encoder interface modules. The interface encoder module is inserted in a dedicated slot.
It is protected against encoder supply short circuits and overloads.

References

Description	Technology type	Power supply	Maximum current	Maximum cable length	Maximum operating frequency	Supported thermal sensors	Reference	Weight
		V ⎓	mA	m/*ft*	kHz			kg/*lb*
Digital encoder interface module	TTL (A/B/I)	5, 12, or 24	250, 100	100/*328*	1,000	PTC (digital/linear), PT100, PT1000, Klixon	VW3A3420	0.150/ *0.331*
	SSI	5, 12, or 24	250, 100	50/*164 (1)*	1,000 *(1)*			
	EnDat® 2.2	5, 12	250, 100	50/*164 (1)*	1,000 *(1)*			
Analog encoder interface module	1 Vpp	5, 12, or 24	250, 100	100/*328*	100	PTC (digital/linear), PT100, PT1000, Klixon	VW3A3422	0.150/ *0.331*
	SinCos Hiperface®	5, 12, or 24	250, 100	100/*328*	100			
Resolver interface module	Resolver	–	50	100/*328*	3...12	PTC (digital/linear), PT100, PT1000, Klixon	VW3A3423	0.150/ *0.331*
HTL encoder interface module	HTL	12, 15, or 24	200, 175, 100	500/*1,640*	300	–	VW3A3424	0.150/ *0.331*

Connection accessories *(2)*

Description	Composition	Length m/*ft*	Reference	Weight kg/*lb*
Cordset				
Cordset equipped with 1 x 15-way high density male SUB-D connector for digital or analog encoder modules	–	*1/3.28*	VW3M4701	–

(1) With propagation delay compensation on EnDat® up to 100 m/328 ft and higher maximum frequencies possible, SSI 300 kHz up to 100 m/328 ft possible.
(2) See more connection accessories on our website.

Variable speed drives
Altivar Process ATV900
Option: Additional I/O modules

PF151298B

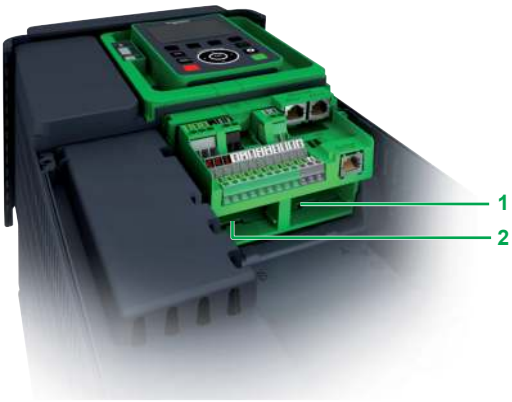

Altivar Process drives slots for additional I/O modules

Additional I/O modules

Presentation

By installing additional I/O modules, Altivar Process drives can be adapted to meet the needs of applications that manage additional sensors or specific sensors.

Two additional I/O modules are available:
- Extended I/O module
- Extended relay module

These modules are inserted in slots A and B on Altivar Process drives:
1 Slot A for additional I/O or fieldbus modules
2 Slot B for additional I/O modules and encoder modules

Extended I/O module

- 2 differential analog inputs configurable via software as current (0-20 mA/4-20 mA), or for PTC, PT100, or PT1000, 2- or 3-wire probes
- 14-bit resolution
- 6 x 24 V ⎓ positive or negative digital inputs
- Sampling: 1 ms max
- 2 assignable digital outputs
- 2 removable spring terminal blocks

Extended relay module

- 3 relay outputs with NO contacts
- 1 fixed screw terminal block

PF140391B

VW3A3203

PF130897B

VW3A3204

References

Description	I/O type				Reference	Weight
	Digital inputs	Digital outputs	Analog inputs	Relay outputs		kg/*lb*
Extended I/O module	6	2	2 *(1)*	–	VW3A3203	0.500/ *1.102*
Extended relay module	–	–	–	3 *(2)*	VW3A3204	0.400/ *0.882*

(1) Differential analog inputs configurable via software as current (0-20 mA/4-20 mA), or for PTC, PT100, or PT1000, 2- or 3-wire probes. When configured as PTC probe inputs, they must never be used to monitor the temperature of an ATEX motor for applications in explosive atmospheres. To make an installation compliant with ATEX recommendations, please refer to the Installation Manual for each product.
(2) NO contacts.

***Note**: The extended digital and analog I/O module and extended relay output module can go in either slot A or slot B on Altivar Process drives.*
However, the drives cannot take 2 modules of the same type (e.g. 2 extended I/O modules or 2 extended relay modules).

2

Presentation

Altivar Process drives have 3 built-in RJ45 communication ports as standard:
- 2 RJ45 EtherNet/IP and Modbus TCP ports
- 1 RJ45 serial port

Integrated communication protocols

Altivar Process drives integrate the EtherNet/IP and Modbus TCP and Modbus serial link communication protocols as standard.

- EtherNet/IP and Modbus TCP dual port
  This offers standard services regularly used in industrial networks:
  Connection to the Modbus TCP or EtherNet/IP network.
- EtherNet/IP adapter including standard CIP objects (AC/DC drive objects, CIP energy objects, etc.), compliant with ODVA specification.
- The RSTP connection allows ring topology to help ensure continuity of service.
- Dual port allows daisy chain connection to simplify cabling and network infrastructure (no need to use a switch).
- Modbus TCP message handling is based on the Modbus protocol and is used to exchange process data with other network devices (e.g. a controller). It provides Altivar Process drives with access to the Modbus protocol and to the high performance of the Ethernet network, which is the communication standard for numerous devices.
- SNMP (Simple Network Management Protocol) offers standard diagnostics services for network management tools.
- The FDR (Fast Device Replacement) service allows automatic reconfiguration of a new device installed to replace an existing device.
- Device integrity is reinforced by disabling some unused services as well as managing a list of authorized devices.
- Setup and adjustment tools (SoMove, EcoStruxure Control Expert with DTM) can be connected locally or remotely.
- The embedded Web server is used to display operating data and dashboards as well as to configure and perform system elements diagnostics from any Web browser.

These numerous services offered by Altivar Process drives simplify integration into Schneider Electric process automation control systems like M580 ePAC or Foxboro Evo DCS.

- Serial port
- Field network operation for exchanging data with other devices via the Modbus protocol
- Multidrop connection of the following HMIs and configuration tools:
  - The graphic display terminal supplied with the drive
  - A Harmony industrial HMI terminal
  - A PC with SoMove or EcoStruxure Control Expert setup software

The detailed specifications for the EtherNet/IP or serial communication ports, and the Modbus and Modbus TCP protocols are available on our website.

Description

1 2 x RJ45 EtherNet/IP and Modbus TCP ports
2 RJ45 serial port
3 Slot A for additional I/O or fieldbus modules
4 Slot B for additional I/O modules and encoder modules
5 Removable screw terminal blocks for 24 V ⎓ power supply and integrated I/O
6 RJ45 serial link for HMI (graphic display terminal, Harmony terminal, etc.)

Altivar Process drives can only take one fieldbus module, in slot A **3** only.
They cannot take 2 modules of the same type (e.g. 2 extended I/O modules or 2 extended relay modules).
The drives can take one extended I/O module and one extended relay module in either slot A **3** or slot B **4**.

Note: *The User Manuals and description files (gsd, eds) for devices on the fieldbuses and networks are available on our website.*

PF151298B

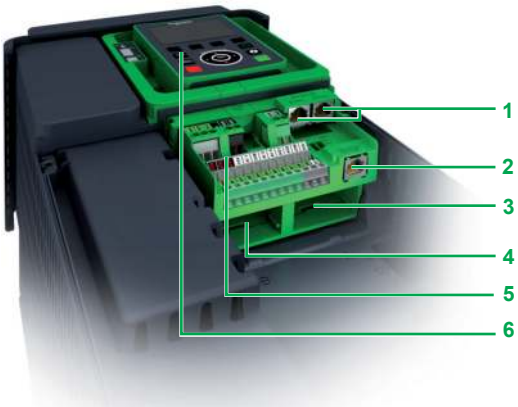

Altivar process drives ports and slots

Optional communication modules

The Altivar Process drive can also be connected to other industrial fieldbuses and networks by using one of the fieldbus modules available as an option. Fieldbus modules are supplied in “cassette” format for ease of mounting/removal.

Dedicated communication modules:
- ■ CANopen:
  - □ RJ45 daisy chain
  - □ SUB-D
  - □ Screw terminal block
- ■ EtherCAT
- ■ PROFINET
- ■ PROFIBUS DP V1
- ■ POWERLINK network
- ■ DeviceNet

PROFINET and PROFIBUS DP V1 modules also support the Profidrive and CiA402 profiles.

It is possible to maintain communication using a separate power supply for the control and power sections. Monitoring and diagnostics via the network are possible even if there is no power supplied to the power section.

Functions

The drive functions can be accessed via the various communication networks:
- ■ Configuration
- ■ Adjustment
- ■ Control
- ■ Monitoring

Altivar Process drives offer a high degree of interfacing flexibility with the possibility to assign, by configuration, the different control sources (I/O, communication networks, and HMI terminal) to control functions in order to meet the requirements of complex applications.

Network services and parameters are configured using the SoMove drive setup software, or using EcoStruxure Control Expert software if the drive is being integrated into a PlantStruXure architecture.

Communication is monitored according to the specific criteria for each protocol. However, regardless of the protocol, it is possible to configure how the drive responds to a detected communication interruption, as follows:
- ■ Define the type of stop when a communication interruption is detected
- ■ Maintain last command received
- ■ Fallback position at preset speed
- ■ Ignore the detected communication interruption

Variable speed drives

Altivar Process ATV900

Communication buses and networks

Integrated ports

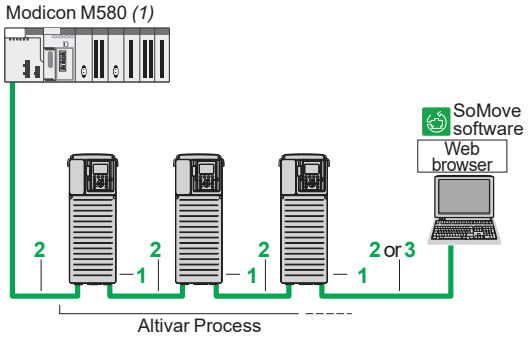

Example of connection on an EtherNet/IP network

Integrated EtherNet/IP and Modbus TCP dual port

Description	Item	Length m/ *ft*	Reference	Weight kg/ *lb*
ConneXium cordsets *(2)*				
Straight shielded twisted pair cables equipped with 2 RJ45 connectors conforming to EIA/TIA-568 category 5 and IEC 11801/EN 50173-1, class D	2	2/ *6.56*	490NTW00002	–
		5/ *16*	490NTW00005	–
		12/ *39*	490NTW00012	–
Crossover shielded twisted pair cables equipped with 2 RJ45 connectors conforming to EIA/TIA-568 category 5 and IEC 11801/EN 50173-1, class D	3	5/ *16*	490NTC00005	–
		15/ *49*	490NTC00015	–
Straight shielded twisted pair cables equipped with 2 RJ45 connectors conforming to UL and CSA 22.1	2	2/ *6.56*	490NTW00002U	–
		5/ *16*	490NTW00005U	–
		12/ *39*	490NTW00012U	–

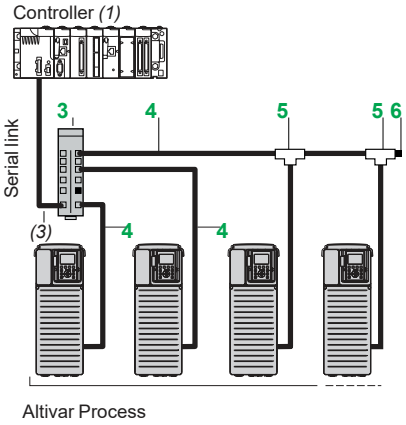

Example of serial link architecture

Integrated serial port

Description		Item	Length m/ *ft*	Reference	Weight kg/ *lb*
Connection accessories					
Splitter box 10 RJ45 connectors and 1 screw terminal block		3	–	LU9GC3	0.500/ *1.102*
Modbus T-junction boxes	With 0.3 m/*0.98 ft* integrated cable	5	0.3/ *0.98*	VW3A8306TF03	0.190/ *0.419*
	With 1 m/*3.28 ft* integrated cable	5	1/ *3.28*	VW3A8306TF10	0.210/ *0.463*
Modbus line terminator *(4)* For RJ45 connector R = 120 Ω, C = 1 nf		6	–	VW3A8306RC	0.010/ *0.022*
Cordsets equipped with 2 RJ45 connectors		4	0.3/ *0.98*	VW3A8306R03	0.025/ *0.055*
			1/ *3.28*	VW3A8306R10	0.060/ *0.132*
			3/ *9.84*	VW3A8306R30	0.130/ *0.287*

(1) Please refer to the Modicon catalogs.
(2) Also exist in 40 and 80 m/131 and 262 ft lengths. For other ConneXium connection accessories, please refer to the NEMA Contactors and Starters: Digest Section 16 catalog.
(3) Cable depends on the controller.
(4) Sold in lots of 2.

Variable speed drives

Altivar Process ATV900

Communication buses and networks

Option: Communication modules

PF514340

VW3A3608

PF514341

VW3A3618

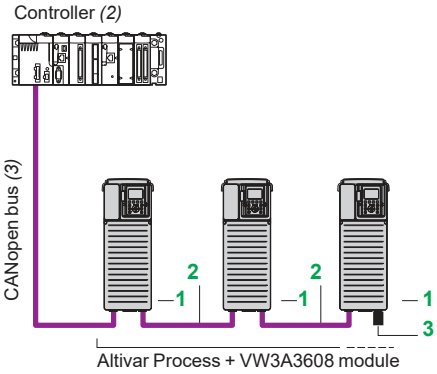

Optimized solution for daisy chain connection to the CANopen bus

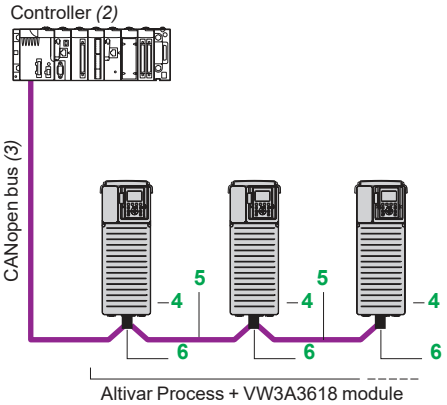

Example of connection to the CANopen bus via SUB-D connector

CANopen bus *(1)*

Description	Item	Length m/ *ft*	Reference	Weight kg/ *lb*
Fieldbus module				
CANopen daisy chain module Ports: 2 RJ45 connectors	1	–	VW3A3608	–
Connection to RJ45 connector (optimized solution for daisy chain connection on CANopen bus)				
CANopen cordsets equipped with 2 RJ45 connectors	2	0.3/ *0.98*	VW3CANCARR03	0.050/ *0.110*
		1/ *3.28*	VW3CANCARR1	0.500/ *1.102*
CANopen line terminator for RJ45 connector	3	–	TCSCAR013M120	–
Fieldbus module				
CANopen SUB-D module Ports: 1 x 9-way male SUB-D connector	4	–	VW3A3618	–
Connection to SUB-D connector				
CANopen cables *(3) (4)* Standard cable, CE mark Low smoke zero halogen Flame-retardant (IEC 60332-1)	5	50/ *164*	TSXCANCA50	4.930/ *10.869*
		100/ *328*	TSXCANCA100	8.800/ *19.401*
		300/ *984*	TSXCANCA300	24.560/ *54.145*
CANopen cables *(3) (4)* UL certification, CE mark Flame-retardant (IEC 60332-2)	5	50/ *164*	TSXCANCB50	3.580/ *7.893*
		100/ *328*	TSXCANCB100	7.840/ *17.284*
		300/ *984*	TSXCANCB300	21.870/ *48.215*
CANopen cables *(3) (4)* Cable for harsh environments or mobile installations, CE mark Low smoke zero halogen Flame-retardant (IEC 60332-1)	5	50/ *164*	TSXCANCD50	3.510/ *7.738*
		100/ *328*	TSXCANCD100	7.770/ *17.130*
		300/ *984*	TSXCANCD300	7.770/ *17.130*
IP20 straight CANopen connector *(5)* 9-way female SUB-D connector with line terminator that can be deactivated For connecting CAN-H, CAN-L, CAN-GND	6	–	TSXCANKCDF180T	0.049/ *0.108*

(1) Altivar Process drives can only take one fieldbus module.
(2) Please refer to the Modicon M580 automation platform catalog.
(3) Cable depends on the controller, please refer to the CANopen for machines catalog.
(4) Standard environment:
- *No particular environmental constraints*
- *Operating temperature between +5 °C and +60 °C/+41 °F and +140 °F*
- *Fixed installation*

Harsh environment:
- *Resistance to hydrocarbons, industrial oils, detergents, solder splashes*
- *Relative humidity up to 100%*
- *Saline atmosphere*
- *Operating temperature between -10 °C and +70 °C/+14 °F and +158 °F*
- *Significant temperature variations*

(5) Only straight connectors are compatible with Altivar Process drives.

Variable speed drives

Altivar Process ATV900

Communication buses and networks
Option: Communication modules

PF095129

VW3A3628

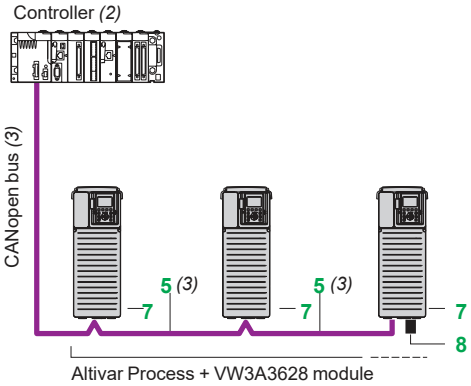

Example of connection to the CANopen bus with a screw terminal block

CANopen bus (continued) *(1)*				
Description	**Item**	**Length m/ *ft***	**Reference**	**Weight kg/ *lb***
Fieldbus module				
CANopen module Port: 1 x 5-way screw terminal block	7	–	VW3A3628	–
Connection to screw terminal block				
CANopen IP20 cordsets *(3)* equipped with 2 x 9-way female SUB-D connectors Standard cable, CE mark. Low smoke zero halogen Flame-retardant (IEC 60332-1)	5	0.3/ *0.98*	TSXCANCADD03	0.091/ *0.201*
		1/ *3.28*	TSXCANCADD1	0.143/ *0.315*
		3/ *9.84*	TSXCANCBDD3	0.268/ *0.591*
		5/ *16*	TSXCANCBDD5	0.400/ *0.882*
IP20 CANopen tap junction boxes equipped with: ■ 4 x 9-way male SUB-D connectors + screw terminal block for trunk cable tap link ■ Line terminator	–	–	TSXCANTDM4	0.196/ *0.432*
IP20 CANopen tap junction boxes equipped with: ■ 2 screw terminal blocks for trunk cable tap link ■ 2 RJ45 connectors for connecting drives ■ 1 RJ45 connector for connecting a PC	–	–	VW3CANTAP2	–
CANopen line terminator for screw terminal connector *(4)*	8	–	TCSCAR01NM120	–

(1) Altivar Process drives can only take one fieldbus module.
(2) Please refer to the Modicon M580 automation platform catalog.
(3) Cable depends on the controller, please refer to the CANopen for machines catalog.
(4) Sold in lots of 2.

Variable speed drives

Altivar Process ATV900

Communication buses and networks

Option: Communication modules

PF 514350

VW3A3627

PROFINET bus *(1)*

Description	Reference	Weight kg/ *lb*
Fieldbus module		
PROFINET module equipped with 2 RJ45 connectors	VW3A3627	0.290/ *0.639*

PF095130

VW3A3607

PROFIBUS DP V1 bus *(1)*

Description	Reference	Weight kg/ *lb*
Fieldbus module		
PROFIBUS DP V1 module Port: 1 x 9-way female SUB-D connector Conforming to PROFIBUS DP V1 Profiles supported: ■ CiA 402 drive ■ Profidrive Offers several message handling modes based on DP V1	VW3A3607	0.140/ *0.309*
SUB-D connection		
IP20 straight connectors *(2)* for PROFIBUS module	LU9AD7	–

PF095144

VW3A3619

POWERLINK network *(3)*

Description	Reference	Weight kg/ *lb*
Ethernet POWERLINK communication module Port: 2 RJ45 connectors	VW3A3619	0.300/ *0.660*

PF100282

VW3A3601

EtherCAT bus *(1)*

Description	Reference	Weight kg/ *lb*
Fieldbus module		
EtherCAT module equipped with 2 RJ45 connectors	VW3A3601	0.290/ *0.639*

PF514345

VW3A3609

DeviceNet bus *(1)*

Description	Reference	Weight kg/ *lb*
Fieldbus module		
DeviceNet module Port: 1 removable 5-way screw connector Profiles supported: ■ CIP AC DRIVE ■ CiA 402 drive	VW3A3609	0.300/ *0.661*

Connection accessories

Description	Length m/*ft*	Reference	Weight kg/ *lb*
Cordset equipped with 1 x 15-way high density male SUB-D connector for digital or analog encoder modules	1/*3.28*	VW3M4701	–

(1) Altivar Process drives can only take one fieldbus module.
(2) Only straight connectors are compatible with Altivar Process drives.
(3) Minimum Altivar Process firmware version compatible with Powerlink module: V1.8.

Variable speed drives

Altivar Process ATV900

Option: Braking units

Presentation

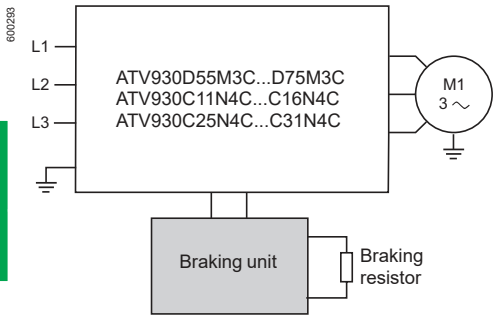

Altivar Process drive with braking unit

Braking units allow Altivar Process drives to operate while braking to a standstill or during “generator” operation, by dissipating the energy in the braking resistor.

ATV930U07M3...D45M3, ATV930U07N4...C22N4, ATV930U22Y6...D90Y6 and ATV950U07N4...D90N4 drives have a built-in dynamic brake transistor.

For ATV930D55M3C...D75M3C, ATV930C11N4C...C16N4C and ATV930C25N4C...C31N4C drives, a braking unit must be used.

Braking units provide IP20 protection. Thermal monitoring is provided by an integrated temperature probe.

Applications

High-inertia machines, machines with slow and fast cycles, high-power machines performing vertical movements.

References

Corresponding drive	Power		Losses at continuous power	Cable (drive-braking unit)		Cable (braking unit-resistors)		Percentage of conduction time	Minimum resistor value	Reference	Weight
	Contin-uous	Maximum		Cross-section	Maximum length	Cross-section	Maximum length				
	kW	kW	W	mm²/ *AWG*	m/ *ft*	mm²/ *AWG*	m/ *ft*	%	Ohms		kg/ *lb*
Supply voltage: 200…240 V 50/60 Hz											
ATV930D55M3C ...D75M3C	60	80	400	3x120/ *3x4/0*	5/ *16*	3x120/ *3x4/0*	10/ *33*	5% at 150 kW 15% at 120 kW 50% at 95 kW	1.4	VW3A7106	28.000/ *61.729*
Supply voltage: 380…480 V 50/60 Hz											
ATV930C11N4C ...C16N4C	100	160	400	2x120/ *2x4/0*	5/ *16*	2x120/ *2x4/0*	10/ *33*	5% at 320 kW 15% at 250 kW 50% at 200 kW	2.5	VW3A7105 *(1)*	28.000/ *61.729*
ATV930C25N4C ATV930C31N4C	200	420	550	– *(2)*	– *(2)*	2x95/ *2x3/0*	50/ *164*	5% at 420 kW 15% at 320 kW 50% at 250 kW	1.05	VW3A7101	30.000/ *66.139*

(1) VW3A7105 is an external braking unit; it is not the same as the integrated braking unit on ATV930C11N4...C16N4 drives.
(2) For ATV930C25N4C and ATV930C31N4C variable speed drives, the braking unit is connected to the drive via internal connections.

Variable speed drives

Altivar Process ATV900

Option: Braking resistors

PF151255

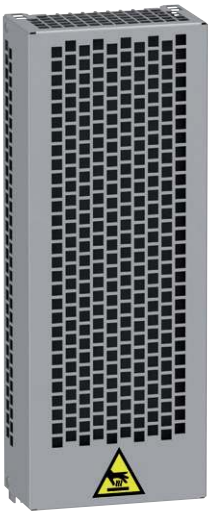

VW3A7741

Presentation

Braking resistors allow Altivar Process drives to operate while braking to a standstill, by dissipating the braking energy. They enable maximum transient braking torque.

Braking resistors are designed to be located outside the enclosure, but should not inhibit natural cooling. Air inlets and outlets must not be obstructed in any way. The air must be free of dust, corrosive gas, and condensation.

Several resistor models are available, depending on the drive rating:

- With IP20 and IP23 casing and thermal monitoring provided by temperature-controlled switch or by the drive
- The internal circuits of Altivar Process drives rated 220 kW/*350 HP* or less at 400...480 V and 45 kW/*60 HP* or less at 200...240V have a built-in dynamic brake transistor.
- An external braking unit is necessary for wall-mounting Altivar Process drives above 220 kW at 400...480 V as well as 55 kW/*75 HP* and 75 kW/*100 HP* at 200...240 V.

Thermal monitoring

Braking resistors from VW3A7730 to VW3A7738 and from VW3A7742 to VW3A7757 are equipped with a thermal switch to detect overheating of the resistor. This thermal switch must be used upstream of the drive to switch off the mains contactor in case of overheating detection.
Refer to the wiring diagrams provided into the braking resistors instruction sheet.

Applications

Braking resistors are designed for a defined cycle (see the three cycle types defined below).

Depending on your applications and cycles, you can use these resistors or define a new value:

- Braking resistors for light braking cycles for machines with cycles and inertia.
  The braking power is limited to 1.5 Tn for 0.8 s every 40 s.
- Braking resistors for medium braking cycles for machines with high inertia and conveyors.
  The braking power is limited to 1.35 Tn for 4 s every 40 s. *(1)*
- Braking resistors for severe braking cycles for machines with very high inertia and vertical movements (hoisting).
  The braking power is limited to 1.65 Tn for 6 s and Tn for 54 s every 120 s. *(2)*

(1) For **ATV930C22/25/31N4C** *drives, the medium braking cycle power is limited to 1.2 Tn for 4 s every 40 s.*
(2) For **ATV930C22/25/31N4C** *drives, the severe (hoisting) braking cycle power is limited to 1.5 Tn for 6 s and Tn for 54 s every 120 s.*

Variable speed drives

Altivar Process ATV900

Option: Braking resistors

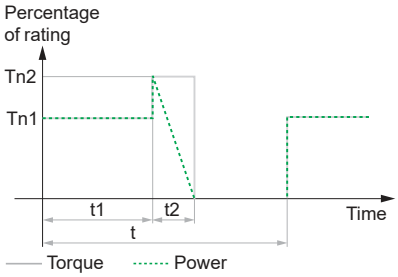

Light cycle	
t = 40 s *t1 = 0 s* *t2 = 0.8 s* *Tn1 = 0* *Tn2 = 1.5 x Tn*	*t: period* *Tn1: braking torque* *Tn2: braking torque* *Tn: nominal torque*

Light braking cycle

References for a light braking cycle

Corresponding drive	Degree of protection of the resistor	Ohmic value at 20 °C/ *68 °F*	Average power available at 50 °C/ *122 °F (1)*		Quantity required per drive	Reference	Weight
		Ω	kW	HP			kg/*lb*
Supply voltage: 200…240 V or 380…480 V 50/60 Hz							
ATV930U07M3 ATV930U07N4...U40N4 ATV950U07N4...U40N4 ATV950U07N4E...U40N4E	IP20	100	0.1	0.13	1	VW3A7730	1.500/ 3.307
ATV930U15M3...U22M3 ATV930U55N4...U75N4 ATV950U55N4...U75N4 ATV950U55N4E...U75N4E	IP20	60	0.16	0.21	1	VW3A7731	2.000/ *4.409*
ATV930U30M3...U40M3 ATV930D11N4...D15N4 ATV950D11N4...D15N4 ATV950D11N4E...D15N4E	IP20	28	0.3	0.4	1	VW3A7732	3.000/ *6.614*
ATV930U55M3...U75M3 ATV930D18N4...D30N4 ATV950D18N4...D30N4 ATV950D18N4E...D30N4E	IP20	16	0.96	1.29	1	VW3A7733	4.000/ *8.818*
ATV930D11M3 ATV930D37N4...D45N4 ATV950D37N4...D45N4 ATV950D37N4E...D45N4E	IP20	10	0.96	1.29	1	VW3A7734	5.500/ *12.125*
ATV930D15M3 ATV930D55N4 ATV950D55N4 ATV950D55N4E	IP20	8	0.96	1.29	1	VW3A7735	5.500/ *12.125*
ATV930D18M3...D22M3 ATV930D75N4...D90N4 ATV950D75N4...D90N4 ATV950D75N4E...D90N4E	IP23	5	1.9	2.5	1	VW3A7736	18.000/ *39.683*
ATV930D30M3...D45M3 ATV930C11N4...C16N4 ATV930C11N4C...C16N4C	IP23	2.5	3.2	4.3	1	VW3A7737	21.000/ *46.297*
ATV930C31N4C	IP23	2.5	3.2	4.3	2		
ATV930D55M3C...D75M3C	IP23	1.4	1.5	2	1	VW3A7738	16.000/ *35.274*
ATV930C22N4 ATV930C25N4C	IP23	1.4	5.1	6.8	1	VW3A7748	29.000/ *69.934*

(1) Load factor for resistors: The value of the average power that can be dissipated at 50 °C/122 °F from the resistor into the casing is determined for a load factor during braking that corresponds to the majority of normal applications:
- Normal duty: 0.8 s braking with a 1.2 Tn braking torque for a 40 s cycle
- Heavy duty: 0.8 s braking with a 1.5 Tn braking torque for a 40 s cycle

Variable speed drives

Altivar Process ATV900

Option: Braking resistors

PF151251A

VW3A7736

References for a light braking cycle (continued)

Corresponding drive	Degree of protection of the resistor	Ohmic value at 20 °C/ 68 °F	Average power available at 50 °C/ 122 °F (1)		Quantity required per drive	Reference	Weight
		Ω	kW	HP			kg/ lb
Supply voltage: 500...690 V 50/ 60 Hz							
ATV930U22Y6	IP20	100	0.1	0.13	1	VW3A7730	1.500/ 3.306
ATV930U30Y6	IP20	100	0.1	0.13	1	VW3A7730	1.500/ 3.306
ATV930U40Y6	IP20	100	0.1	0.13	1	VW3A7730	1.500/ 3.306
ATV930U55Y6	IP20	100	0.1	0.13	1	VW3A7730	1.500/ 3.306
ATV930U75Y6	IP20	60	0.16	0.21	1	VW3A7731	1.800/ 3.968
ATV930D11Y6	IP20	28	0.3	0.4	1	VW3A7732	2.700/ 5.952
ATV930D15Y6	IP20	28	0.3	0.4	1	VW3A7732	2.700/ 5.952
ATV930D18Y6	IP20	28	0.3	0.4	1	VW3A7732	2.700/ 5.952
ATV930D22Y6	IP20	16	0.96	1.29	1	VW3A7733	3.800/ 8.377
ATV930D30Y6	IP20	16	0.96	1.29	1	VW3A7733	3.800/ 8.377
ATV930D37Y6	IP20	10	0.96	1.29	1	VW3A7734	4.300/ 9.479
ATV930D45Y6	IP20	10	0.96	1.29	1	VW3A7734	4.300/ 9.479
ATV930D55Y6	IP20	10	0.96	1.29	1	VW3A7734	4.300/ 9.479
ATV930D75Y6	IP23	5	1.9	2.5	1	VW3A7736	18.000/ 39.683
ATV930D90Y6	IP23	5	1.9	2.5	1	VW3A7736	18.000/ 39.683

(1) Load factor for resistors: The value of the average power that can be dissipated at 50 °C/122 °F from the resistor into the casing is determined for a load factor during braking that corresponds to the majority of normal applications:
- Normal duty: 0.8 s braking with a 1.2 Tn braking torque for a 40 s cycle
- Heavy duty: 0.8 s braking with a 1.5 Tn braking torque for a 40 s cycle

Variable speed drives

Altivar Process ATV900

Option: Braking resistors

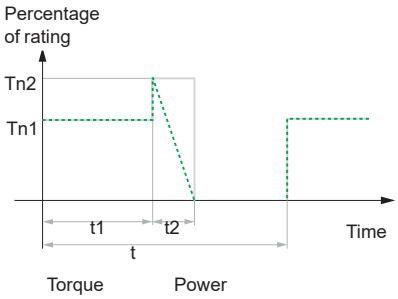

Medium cycle	
t = 40 s *t1 = 0 s* *t2 = 4 s* *Tn1 = 0* *Tn2 = 1.35 x Tn* *Tn2 = 1.2 x Tn (1)*	*t: period* *Tn1: braking torque* *Tn2: braking torque* *Tn: nominal torque* *(1) Value for ATV930C22/25/31N4C*

Medium braking cycle

References for a medium braking cycle

Corresponding drive	Degree of protection of the resistor	Ohmic value at 20 °C/ *68 °F*	Average power available at 50 °C/ *122 °F (1)*		Quantity required per drive	Reference	Weight
		Ω	kW	HP			kg/*lb*
Supply voltage: 200…240 V or 380…480 V 50/60 Hz							
ATV930U07M3 ATV930U07N4...U15N4 ATV950U07N4...U15N4 ATV950U07N4E...U15N4E	IP20	100	0.1	0.13	1	VW3A7730	1.500/ *3.307*
ATV930U15M3...U22M3	IP20	60	0.16	0.21	1	VW3A7731	2.000/ *4.409*
ATV930U30M3...U40M3	IP20	28	0.3	0.4	1	VW3A7732	3.000/ *6.614*
ATV930U55M3...U75M3	IP20	16	0.96	1.29	1	VW3A7733	4.000/ *8.818*
ATV930D11M3	IP20	10	0.96	1.29	1	VW3A7734	5.500/ *12.125*
ATV930D15M3	IP20	8	0.96	1.29	1	VW3A7735	5.500/ *12.125*
ATV930D18M3...D22M3	IP23	5	1.9	2.5	1	VW3A7736	18.000/ *39.684*
ATV930D30M3...D45M3	IP23	2.5	3.2	4.3	1	VW3A7737	20.000/ *44.092*
ATV930U22N4...U40N4 ATV950U22N4...U40N4 ATV950U22N4E...U40N4E	IP20	100	0.26	0.35	1	VW3A7740	2.500/ *5.512*
ATV930U55N4...U75N4 ATV950U55N4...U75N4 ATV950U55N4E...U75N4E	IP20	60	0.5	0.67	1	VW3A7741	4.500/ *9.921*
ATV930D11N4...D15N4 ATV950D11N4...D15N4 ATV950D11N4E...D15N4E	IP20	28	0.96	1.29	1	VW3A7742	4.000/ *8.818*
ATV930D18N4...D30N4 ATV950D18N4...D30N4 ATV950D18N4E...D30N4E	IP20	16	1.9	2.5	1	VW3A7743	7.000/ *15.432*
ATV930D37N4...D45N4 ATV950D37N4...D45N4 ATV950D37N4E...D45N4E	IP20	10	2.9	3.9	1	VW3A7744	11.500/ *25.353*
ATV930D55N4 ATV950D55N4 ATV950D55N4E	IP23	8	3.8	5.1	1	VW3A7745	23.000/ *50.706*
ATV930D75N4...D90N4 ATV950D75N4...D90N4 ATV950D75N4E...D90N4E	IP23	5	6.9	9.3	1	VW3A7746	27.000/ *59.525*
ATV930C11N4...C16N4 ATV930C11N4C...C16N4C	IP23	2.5	11	15	1	VW3A7747	43.000/ *94.799*
ATV930D55M3C...D75M3C	IP23	1.4	5.1	6.8	1	VW3A7748	25.000/ *55.116*
ATV930C22N4 ATV930C25N4C...C31N4C	IP23	1.4	29	39	1	VW3A7757	121.000/ *69.934*

(1) Load factor for resistors: The value of the average power that can be dissipated at 50 °C/122 °F from the resistor into the casing is determined for a load factor during braking that corresponds to the majority of normal applications:
- Normal duty: 4 s braking with a 1.35 Tn braking torque for a 40 s cycle
- Heavy duty: 4 s braking with a 1.65 Tn braking torque for a 40 s cycle
For ATV930C22N4/25N4C/C31N4C drives:
- Normal duty: 4 s braking with a 1.2 Tn braking torque for a 40 s cycle
- Heavy duty: 4 s braking with a 1.5 Tn braking torque for a 40 s cycle

Variable speed drives

Altivar Process ATV900

Option: Braking resistors

PF151257

VW3A7743

References for a medium braking cycle (continued)

Corresponding drive	Degree of protection of the resistor	Ohmic value at 20 °C/ 68 °F	Average power available at 50 °C/ 122 °F (1)		Quantity required per drive	Reference	Weight
		Ω	kW	HP			kg/lb
Supply voltage: 500...690 V 50/ 60 Hz							
ATV930U22Y6	IP20	100	0.26	0.35	1	VW3A7740	2.500/ 5.511
ATV930U30Y6	IP20	100	0.26	0.35	1	VW3A7740	2.500/ 5.511
ATV930U40Y6	IP20	100	0.26	0.35	1	VW3A7740	2.500/ 5.511
ATV930U55Y6	IP20	60	0.5	0.67	1	VW3A7741	3.800/ 8.377
ATV930U75Y6	IP20	60	0.5	0.67	1	VW3A7741	3.800/ 8.377
ATV930D11Y6	IP20	28	0.96	1.29	1	VW3A7742	4.200/ 9.259
ATV930D15Y6	IP20	28	0.96	1.29	1	VW3A7742	4.200/ 9.259
ATV930D18Y6	IP20	16	1.9	2.5	1	VW3A7743	6.400/ 14.109
ATV930D22Y6	IP20	16	1.9	2.5	1	VW3A7743	6.400/ 14.109
ATV930D30Y6	IP20	16	1.9	2.5	1	VW3A7743	6.400/ 14.109
ATV930D37Y6	IP20	10	2.9	3.9	1	VW3A7744	9.000/ 19.841
ATV930D45Y6	IP20	10	2.9	3.9	1	VW3A7744	9.000/ 19.841
ATV930D55Y6	IP23	8	3.8	5.1	1	VW3A7745	25.500/ 56.217
ATV930D75Y6	IP23	5	6.9	9.3	1	VW3A7746	30.500/ 67.240
ATV930D90Y6	IP23	5	6.9	9.3	1	VW3A7746	30.500/ 67.240

(1) Load factor for resistors: The value of the average power that can be dissipated at 50 °C/122 °F from the resistor into the casing is determined for a load factor during braking that corresponds to the majority of normal applications:
- Normal duty: 4 s braking with a 1.35 Tn braking torque for a 40 s cycle
- Heavy duty: 4 s braking with a 1.65 Tn braking torque for a 40 s cycle

Variable speed drives

Altivar Process ATV900

Option: Braking resistors

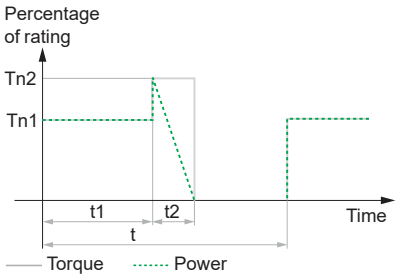

Severe cycle	
t = 120 s	*t: period*
t1 = 54 s	*Tn1: braking torque*
t2 = 6 s	*Tn2: braking torque*
Tn1= Tn	*Tn: nominal torque*
Tn2= 1.65 x Tn	*(1) Value for*
Tn2= 1.5 x Tn (1)	*ATV930C22/25/31N4C*

Severe braking cycle

References for a severe braking cycle (hoisting applications)

Corresponding drive	Degree of protection of the resistor	Ohmic value at 20 °C/ *68 °F*	Average power available at 50 °C/ *122 °F (1)*		Quantity required per drive	Reference	Weight
		Ω	kW	HP			kg/*lb*
Supply voltage: 200…240 V or 380…480 V 50/60 Hz							
ATV930U07M3	IP20	100	0.26	0.35	1	VW3A7740	2.500/ *5.512*
ATV930U15M3	IP20	60	0.5	0.67	1	VW3A7741	4.500/ *9.921*
ATV930U22M3	IP20	60	2.9	3.9	1	VW3A7751	10.000/ *22.046*
ATV930U30M3	IP20	28	0.96	1.29	1	VW3A7742	4.000/ *8.818*
ATV930U55M3	IP20	16	1.9	2.5	1	VW3A7743	7.000/ *15.432*
ATV930D11M3	IP20	10	2.9	3.9	1	VW3A7744	11.500/ *25.353*
ATV930D18M3	IP23	5	6.9	9.3	1	VW3A7746	27.000/ *59.524*
ATV930U07N4...U40N4 ATV950U07N4...U40N4 ATV950U07N4E...U40N4E	IP20	100	1.4	1.88	1	VW3A7750	5.500/ *12.125*
ATV930U55N4...U75N4 ATV950U55N4...U75N4 ATV950U55N4E...U75N4E	IP20	60	2.9	3.9	1	VW3A7751	10.000/ *22.046*
ATV930U40M3 ATV930D11N4...D15N4 ATV950D11N4...D15N4 ATV950D11N4E...D15N4E	IP23	28	5.1	6.8	1	VW3A7752	25.000/ *55.116*
ATV930U75M3 ATV930D18N4...D30N4 ATV950D18N4...D30N4 ATV950D18N4E...D30N4E	IP23	16	14	19	1	VW3A7753	47.000/ *103.617*
ATV930D37N4...D45N4 ATV950D37N4...D45N4 ATV950D37N4E...D45N4E	IP23	10	19	25	1	VW3A7754	67.000/ *147.710*
ATV930D90N4 ATV950D90N4 ATV950D90N4E	IP23	10	19	25	2		
ATV930D15M3 ATV930D55N4 ATV950D55N4 ATV950D55N4E	IP23	8	25	34	1	VW3A7755	86.000/ *189.597*
ATV930D22M3 ATV930D75N4 ATV950D75N4 ATV950D75N4E	IP23	5	32	43	1	VW3A7756	126.000/ *277.782*
ATV930D30M3...D45M3 ATV930C11N4...C16N4 ATV930C11N4C...C16N4C	IP23	5	32	43	2		
ATV930C22N4 ATV930C25N4C	IP23	5	32	43	3		
ATV930C31N4C	IP23	5	32	43	4		
ATV930D55M3C...D75M3C	IP23	1.4	29	39	1	VW3A7757	114.000/ *251.327*

(1) Load factor for resistors: The value of the average power that can be dissipated at 50 °C/122 °C from the resistor into the casing is determined for a load factor during braking that corresponds to the majority of normal applications:
- Heavy duty: 54 s braking with a 1 Tn braking torque and 6 s braking with a 1.65 Tn braking torque for a 120 s cycle
*- For **ATV930C22N4/25N4C/C31N4C** drives: Heavy duty: 54 s braking with a 1 Tn braking torque and 6 s braking with a 1.5 Tn braking torque for a 120 s cycle*

Variable speed drives

Altivar Process ATV900

Option: Braking resistors

VW3A7755

References for a severe braking cycle (hoisting applications) (continued)

Corresponding drive	Degree of protection of the resistor	Ohmic value at 20 °C/ *68 °F*	Average power available at 50 °C/ *122 °F (1)*		Quantity required per drive	Reference	Weight
		Ω	kW	HP			kg/*lb*
Supply voltage: 500...690 V 50/ 60 Hz							
ATV930U22Y6	IP20	100	1.4	1.88	1	VW3A7750	5.000/ *11.023*
ATV930U30Y6	IP20	100	1.4	1.88	1	VW3A7750	5.000/ *11.023*
ATV930U40Y6	IP20	100	1.4	1.88	1	VW3A7750	5.000/ *11.023*
ATV930U55Y6	IP20	60	2.9	3.9	1	VW3A7751	8.300/ *18.298*
ATV930U75Y6	IP20	60	2.9	3.9	1	VW3A7751	8.300/ *18.298*
ATV930D11Y6	IP23	28	5.1	6.8	1	VW3A7752	27.000/ *59.524*
ATV930D15Y6	IP23	28	5.1	6.8	1	VW3A7752	27.000/ *59.524*
ATV930D18Y6	IP23	16	14	19	1	VW3A7753	48.500/ *106.924*
ATV930D22Y6	IP23	16	14	19	1	VW3A7753	48.500/ *106.924*
ATV930D30Y6	IP23	16	14	19	1	VW3A7753	48.500/ *106.924*
ATV930D37Y6	IP23	10	19	25	1	VW3A7754	71.000/ *156.528*
ATV930D45Y6	IP23	10	19	25	1	VW3A7754	71.000/ *156.528*
ATV930D55Y6	IP23	8	25	34	1	VW3A7755	87.500/ *192.904*
ATV930D75Y6	IP23	5	32	43	1	VW3A7756	126.000/ *277.782*
ATV930D90Y6	IP23	10	19	25	2	VW3A7754	71.000/ *156.528*

(1) Load factor for resistors: The value of the average power that can be dissipated at 50 °C/122 °C from the resistor into the casing is determined for a load factor during braking that corresponds to the majority of normal applications:
- Heavy duty: 54 s braking with a 1 Tn braking torque and 6 s braking with a 1.65 Tn braking torque for a 120 s cycle

Variable speed drives

Altivar Process ATV900

Option: Passive filters

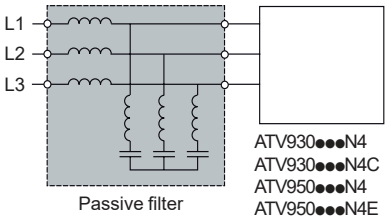

Altivar Process drive with passive filter

Presentation

Passive filters are used to obtain total harmonic distortion of less than 10% or 5%.
Reactive power increases at no load or low load. To help reduce this reactive power, the filter capacitors can be disconnected (see the diagrams on our website).
Passive filters provide IP20 protection.

Applications

Reduction of current harmonics in order to use drives in the first environment (restricted distribution, domestic applications).

PF140347A

VW3A46106

Passive filters: 400 V 50 Hz three-phase supply

Motor rating		Corresponding Altivar Process drives	Filter Nominal current Input	Filter Nominal current Output	Quantity required per drive	Reference (1)	Weight
kW	*HP*		A	A			kg/ *lb*
THDi < 10%							
0.75	*1*	**ATV930U07N4 ATV950U07N4 ATV950U07N4E**	6	6.2	1	VW3A46101	12.000/ *26.455*
1.5	*2*	**ATV930U15N4 ATV950U15N4 ATV950U15N4E**					
2.2	*3*	**ATV930U22N4 ATV950U22N4 ATV950U22N4E**					
3	–	**ATV930U30N4 ATV950U30N4 ATV950U30N4E**					
4	*5*	**ATV930U40N4 ATV950U40N4 ATV950U40N4E**	10	10.4	1	VW3A46102	13.500/ *29.762*
5.5	*7.5*	**ATV930U55N4 ATV950U55N4 ATV950U55N4E**					
7.5	*10*	**ATV930U75N4 ATV950U75N4 ATV950U75N4E**	14	14.5	1	VW3A46103	16.300/ *35.935*
11	*15*	**ATV930D11N4 ATV950D11N4 ATV950D11N4E**	22	23	1	VW3A46104	22.000/ *48.502*
15	*20*	**ATV930D15N4 ATV950D15N4 ATV950D15N4E**	29	30	1	VW3A46105	25.000/ *55.116*
18.5	*25*	**ATV930D18N4 ATV950D18N4 ATV950D18N4E**	35	37	1	VW3A46106	37.000/ *81.571*
22	*30*	**ATV930D22N4 ATV950D22N4 ATV950D22N4E**	43	45	1	VW3A46107	39.000/ *85.980*
30	*40*	**ATV930D30N4 ATV950D30N4 ATV950D30N4E**	58	60	1	VW3A46108	44.000/ *97.003*
37	*50*	**ATV930D37N4 ATV950D37N4 ATV950D37N4E**	72	75	1	VW3A46109	56.000/ *123.459*
45	*60*	**ATV930D45N4 ATV950D45N4 ATV950D45N4E**	86	90	1	VW3A46110	62.000/ *136.686*
55	*75*	**ATV930D55N4 ATV930D55N4C ATV950D55N4 ATV950D55N4E**	101	105	1	VW3A46111	74.000/ *163.142*
75	*100*	**ATV930D75N4 ATV930D75N4C ATV950D75N4 ATV950D75N4E**	144	150	1	VW3A46112	85.000/ *187.393*
90	*125*	**ATV930D90N4 ATV930D90N4C ATV950D90N4 ATV950D90N4E**	180	187	1	VW3A46113	102.000/ *224.871*

*(1) When used with **ATV950U07N4/N4E...D90N4/N4E** drives, the filter must be mounted in a separate enclosure to maintain IP55 protection for the installation.*

Variable speed drives

Altivar Process ATV900

Option: Passive filters

PF140351

VW3A46116

Passive filters: 400 V 50 Hz three-phase supply

Motor rating		Corresponding Altivar Process drives	Filter Nominal current		Quantity required per drive	Reference	Weight
			Input	Output			
kW	*HP*		A	A			kg/ *lb*
THDi < 10% (continued)							
110	*150*	**ATV930C11N4** **ATV930C11N4C**	217	225	1	VW3A46114	119/ *262*
132	*200*	**ATV930C13N4** **ATV930C13N4C**	252	262	1	VW3A46115	136/ *300*
160	*250*	**ATV930C16N4** **ATV930C16N4C**	304	316	1	VW3A46116	142/ *313*
220	*350*	**ATV930C22N4** **ATV930C22N4C**	380	395	1	VW3A46118	185/ *408*
250	*400*	**ATV930C25N4C**	433	450	1	VW3A46119	203/ *448*
315	*500*	**ATV930C31N4C**	304	316	2	VW3A46116	142/ *313*

Variable speed drives

Altivar Process ATV900

Option: Passive filters

PF140347A

VW3A46126

Passive filters: 400 V 50 Hz three-phase supply

Motor rating		Corresponding Altivar Process drives	Filter Nominal current Input	Filter Nominal current Output	Quantity required per drive	Reference (1)	Weight
kW	*HP*		A	A			kg/ *lb*
THDi < 5%							
0.75	*1*	**ATV930U07N4** **ATV950U07N4** **ATV950U07N4E**	6	6.2	1	VW3A46120	16.000/ *35.274*
1.5	*2*	**ATV930U15N4** **ATV950U15N4** **ATV950U15N4E**					
2.2	*3*	**ATV930U22N4** **ATV950U22N4** **ATV950U22N4E**					
3	–	**ATV930U30N4** **ATV950U30N4** **ATV950U30N4E**					
4	*5*	**ATV930U40N4** **ATV950U40N4** **ATV950U40N4E**	10	10.4	1	VW3A46121	18.000/ *39.683*
5.5	*7.5*	**ATV930U55N4** **ATV950U55N4** **ATV950U55N4E**					
7.5	*10*	**ATV930U75N4** **ATV950U75N4** **ATV950U75N4E**	14	14.5	1	VW3A46122	20.000/ *44.092*
11	*15*	**ATV930D11N4** **ATV950D11N4** **ATV950D11N4E**	22	23	1	VW3A46123	30.000/ *66.139*
15	*20*	**ATV930D15N4** **ATV950D15N4** **ATV950D15N4E**	29	30	1	VW3A46124	34.000/ *74.957*
18.5	*25*	**ATV930D18N4** **ATV950D18N4** **ATV950D18N4E**	35	37	1	VW3A46125	53.000/ *116.845*
22	*30*	**ATV930D22N4** **ATV950D22N4** **ATV950D22N4E**	43	45	1	VW3A46126	58.000/ *127.868*
30	*40*	**ATV930D30N4** **ATV950D30N4** **ATV950D30N4E**	58	60	1	VW3A46127	76.000/ *167.551*
37	*50*	**ATV930D37N4** **ATV950D37N4** **ATV950D37N4E**	72	75	1	VW3A46128	98.000/ *216.053*
45	*60*	**ATV930D45N4** **ATV950D45N4** **ATV950D45N4E**	86	90	1	VW3A46129	104.000/ *229.281*
55	*75*	**ATV930D55N4** **ATV930D55N4C** **ATV950D55N4** **ATV950D55N4E**	101	105	1	VW3A46130	106.000/ *233,690*
75	*100*	**ATV930D75N4** **ATV930D75N4C** **ATV950D75N4** **ATV950D75N4E**	144	150	1	VW3A46131	126.000/ *277.782*
90	*125*	**ATV930D90N4** **ATV930D90N4C** **ATV950D90N4** **ATV950D90N4E**	180	187	1	VW3A46132	135.000/ *297.623*

*(1) When used with **ATV950U07N4/N4E...D90N4/N4E** drives, the filter must be mounted in a separate enclosure to maintain IP55 protection for the installation.*

Variable speed drives

Altivar Process ATV900

Option: Passive filters

PF140352

VW3A46135

Passive filters: 400 V 50 Hz three-phase supply

Motor rating		Corresponding Altivar Process drives	Filter Nominal current Input	Filter Nominal current Output	Quantity required per drive	Reference	Weight
kW	*HP*		A	A			kg/ *lb*
THDi < 5% (continued)							
110	*150*	**ATV930C11N4** **ATV930C11N4C**	217	225	1	VW3A46133	172/ *379*
132	*200*	**ATV930C13N4** **ATV930C13N4C**	252	262	1	VW3A46134	206/ *454*
160	*250*	**ATV930C16N4** **ATV930C16N4C**	304	316	1	VW3A46135	221/ *487*
220	*350*	**ATV930C22N4** **ATV930C22N4C**	380	395	1	VW3A46137	265/ *584*
250	*400*	**ATV930C25N4C**	433	450	1	VW3A46138	272/ *600*
315	*500*	**ATV930C31N4C**	304	316	2	VW3A46135	221/ *487*

Variable speed drives

Altivar Process ATV900

Option: Passive filters

VW3A46144

Passive filters: 460 V 60 Hz three-phase supply

Motor rating		Corresponding Altivar Process drives	Filter Nominal current		Quantity required per drive	Reference (1)	Weight
			Input	Output			
kW	HP		A	A			kg/ lb
THDi < 10%							
0.75	1	ATV930U07N4 ATV950U07N4 ATV950U07N4E	6	6.2	1	VW3A46139	12.000/ 26.455
1.5	2	ATV930U15N4 ATV950U15N4 ATV950U15N4E					
2.2	3	ATV930U22N4 ATV950U22N4 ATV950U22N4E					
3	–	ATV930U30N4 ATV950U30N4 ATV950U30N4E					
4	5	ATV930U40N4 ATV950U40N4 ATV950U40N4E	10	10.4	1	VW3A46140	13.500/ 29.762
5.5	7.5	ATV930U55N4 ATV950U55N4 ATV950U55N4E					
7.5	10	ATV930U75N4 ATV950U75N4 ATV950U75N4E	14	14.5	1	VW3A46141	16.300/ 35.935
11	15	ATV930D11N4 ATV950D11N4 ATV950D11N4E	19	19.5	1	VW3A46142	22.000/ 48.502
15	20	ATV930D15N4 ATV950D15N4 ATV950D15N4E	25	26	1	VW3A46143	23.000/ 50.706
18.5	25	ATV930D18N4 ATV950D18N4 ATV950D18N4E	31	32	1	VW3A46144	33.000/ 72.752
22	30	ATV930D22N4 ATV950D22N4 ATV950D22N4E	36	37	1	VW3A46145	37.000/ 81.571
30	40	ATV930D30N4 ATV950D30N4 ATV950D30N4E	48	50	1	VW3A46146	39.000/ 85.980
37	50	ATV930D37N4 ATV950D37N4 ATV950D37N4E	60	62	1	VW3A46147	43.000/ 94.799
45	60	ATV930D45N4 ATV950D45N4 ATV950D45N4E	73	76	1	VW3A46148	55.000/ 121.254
55	75	ATV930D55N4 ATV930D55N4C ATV950D55N4 ATV950D55N4E	95	99	1	VW3A46149	62.000/ 136.686
75	100	ATV930D75N4 ATV930D75N4C ATV950D75N4 ATV950D75N4E	118	122	1	VW3A46150	74.000/ 163.142
90	125	ATV930D90N4 ATV930D90N4C ATV950D90N4 ATV950D90N4E	154	160	1	VW3A46151	85.000/ 187.393
110	150	ATV930C11N4 ATV930C11N4C	183	190	1	VW3A46152	102.000/ 224.871
132	200	ATV930C13N4 ATV930C13N4C	231	240	1	VW3A46153	119.000/ 262.350
160	250	ATV930C16N4 ATV930C16N4C	291	302.5	1	VW3A46154	142.000/ 313.056
220	350	ATV930C22N4 ATV930C22N4C	355	369	1	VW3A46155	162.000/ 357.149
250	400	ATV930C25N4C	436	450	2	VW3A46157	205.000/ 451.948
315	500	ATV930C31N4C	231	240	2	VW3A46153	119.000/ 262.350

*(1) When used with **ATV950U07N4/N4E...D90N4/N4E** drives, the filter must be mounted in a separate enclosure to maintain IP55 protection for the installation.*

Variable speed drives

Altivar Process ATV900

Option: Passive filters

PF140347A

VW3A46164

Passive filters: 460 V 60 Hz three-phase supply

Motor rating		Corresponding Altivar Process drives	Filter Nominal current		Quantity required per drive	Reference (1)	Weight
			Input	Output			
kW	HP		A	A			kg/ lb
THDi < 5%							
0.75	1	**ATV930U07N4** **ATV950U07N4** **ATV950U07N4E**	6	6.2	1	VW3A46158	16.000/ 35.274
1.5	2	**ATV930U15N4** **ATV950U15N4** **ATV950U15N4E**					
2.2	3	**ATV930U22N4** **ATV950U22N4** **ATV950U22N4E**					
3	–	**ATV930U30N4** **ATV950U30N4** **ATV950U30N4E**					
4	5	**ATV930U40N4** **ATV950U40N4** **ATV950U40N4E**	10	10.4	1	VW3A46159	18.000/ 39.683
5.5	7.5	**ATV930U55N4** **ATV950U55N4** **ATV950U55N4E**					
7.5	10	**ATV930U75N4** **ATV950U75N4** **ATV950U75N4E**	14	14.5	1	VW3A46160	20.000/ 44.092
11	15	**ATV930D11N4** **ATV950D11N4** **ATV950D11N4E**	19	19.5	1	VW3A46161	30.000/ 66.139
15	20	**ATV930D15N4** **ATV950D15N4** **ATV950D15N4E**	25	26	1	VW3A46162	34.000/ 74.957
18.5	25	**ATV930D18N4** **ATV950D18N4** **ATV950D18N4E**	31	32	1	VW3A46163	52.000/ 114.640
22	30	**ATV930D22N4** **ATV950D22N4** **ATV950D22N4E**	36	37	1	VW3A46164	53.000/ 116.845
30	40	**ATV930D30N4** **ATV950D30N4** **ATV950D30N4E**	48	50	1	VW3A46165	57.000/ 125.663
37	50	**ATV930D37N4** **ATV950D37N4** **ATV950D37N4E**	60	62	1	VW3A46166	75.000/ 165.347
45	60	**ATV930D45N4** **ATV950D45N4** **ATV950D45N4E**	73	76	1	VW3A46167	97.000/ 213.848
55	75	**ATV930D55N4** **ATV930D55N4C** **ATV950D55N4** **ATV950D55N4E**	95	99	1	VW3A46168	104.000/ 229.281
75	100	**ATV930D75N4** **ATV930D75N4C** **ATV950D75N4** **ATV950D75N4E**	118	122	1	VW3A46169	106.000/ 233.690
90	125	**ATV930D90N4** **ATV930D90N4C** **ATV950D90N4** **ATV950D90N4E**	154	160	1	VW3A46170	126.000/ 277.782
110	150	**ATV930C11N4** **ATV930C11N4C**	183	190	1	VW3A46171	135.000/ 297.624
132	200	**ATV930C13N4** **ATV930C13N4C**	231	240	1	VW3A46172	170.000/ 374.786
160	250	**ATV930C16N4** **ATV930C16N4C**	291	316	1	VW3A46173	221.000/ 487.221
220	350	**ATV930C22N4** **ATV930C22N4C**	355	369	1	VW3A46174	229.000/ 504.859
250	400	**ATV930C25N4C**	436	450	1	VW3A46176	270.000/ 595.248
315	500	**ATV930C31N4C**	231	240	2	VW3A46172	170.000/ 374.786

*(1) When used with **ATV950U07N4/N4E...D90N4/N4E** drives, the filter must be mounted in a separate enclosure to maintain IP55 protection for the installation.*

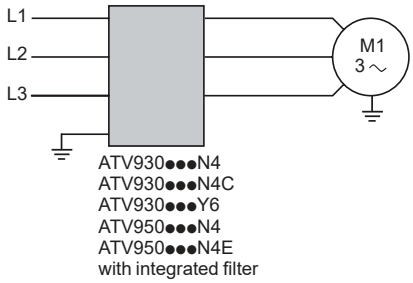

Altivar Process drive with integrated EMC filter

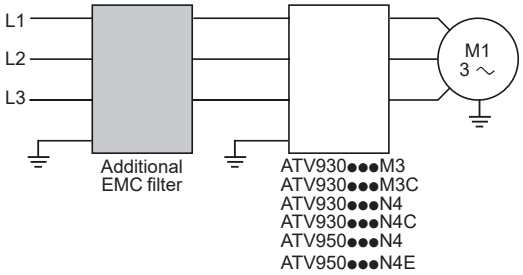

Altivar Process drive with additional EMC filter

Integrated EMC filters

Altivar Process drives (except ATV930●●●M3/M3C) have integrated radio interference input filters in accordance with the EMC standard for variable speed electrical power drive "products" IEC/EN 61800-3, edition 2, category C2 or C3 in environment 1 or 2, and to comply with the European EMC (electromagnetic compatibility) directive.

The integrated EMC filter runs off the leakage current to ground. The leakage current can be reduced by disconnecting the built-in EMC Filter (please refer to the Installation Manual). In this configuration, the product does not comply with the European EMC directive.

Corresponding drive	Maximum length of shielded cable *(1)* acc. to	
	IEC/EN 61800-3 category C2	IEC/EN 61800-3 category C3
	m/*ft*	m/*ft*
Three-phase supply voltage: 380…480 V		
ATV930U07N4...D45N4	50/*164*	150/*492*
ATV930D55N4/N4C...D90N4/N4C ATV930C11N4/N4C...C16N4/N4C	–	150/*492*
ATV930U07N4Z...D45N4Z	10/*32*	50/*164*
ATV930D55N4Z...D90N4Z	–	50/*164*
ATV930C22N4 ATV930C22N4C...C31N4C	–	50/*164*
ATV930C11N4F...C31N4F ATV950C11N4F...C31N4F	–	300/*984*
Three-phase supply voltage: 380…480 V IP55		
ATV950U07N4/N4E...D45N4/N4E	50/*164*	150/*492*
ATV950D55N4/N4E...D90N4/N4E	–	150/*492*
Three-phase supply voltage: 500...690 V IP00		
ATV930U22Y6...D90Y6	–	25/*82*

Additional EMC input filters

Additional EMC input filters can be used to meet more stringent requirements and are designed to reduce conducted emissions on the line supply below the limits of standard IEC/EN 61800-3 category C1, C2, or C3.

Use according to the type of line supply

Use of these additional filters is only possible on TN (neutral connection) and TT (grounded neutral) type systems.

Standard IEC/EN 61800-3, appendix D2.1, states that on IT systems (isolated or impedance grounded neutral), filters can cause permanent insulation monitors to operate in a random manner.

If a machine needs to be installed on an IT system, one solution is to insert an isolation transformer and connect the machine locally to a TN or TT system.

References

Corresponding drive	Maximum length of shielded cable *(1)*			In *(2)*	If	Reference	Weight
	IEC/EN 61800-3 category C1 *(3)*	IEC/EN 61800-3 category C2 *(3)*	IEC/EN 61800-3 category C3 *(3)*				
	m/*ft*	m/*ft*	m/*ft*	A	mA		kg/*lb*
Three-phase supply voltage: 200...240 V 50 Hz							
ATV930U07M3...U15M3	50/ *164*	150/ *492*	300/ *984*	8	7.6	VW3A4701	2.000/ *4.409*
ATV930U22M3...U30M3	50/ *164*	150/ *492*	300/ *984*	15	7.6	VW3A4702	2.400/ *5.291*
ATV930U40M3...U75M3	50/ *164*	150/ *492*	300/ *984*	35	7.6	VW3A4703	4.100/ *9.039*
ATV930D11M3	50/ *164*	150/ *492*	300/ *984*	50	7.6	VW3A4704	5.200/ *11.464*
ATV930D15M3	50/ *164*	150/ *492*	300/ *984*	70	13.9	VW3A4705	6.100/ *13.448*
ATV930D18M3...D22M3	50/ *164*	150/ *492*	300/ *984*	100	13.9	VW3A4706	6.500/ *14.330*
ATV930D30M3...D37M3 ATV930D30M3C...D37M3C	50/ *164*	150/ *492*	300/ *984*	160	13.9	VW3A4707	8.500/ *18.739*
ATV930D45M3 ATV930D45M3C	50/ *164*	150/ *492*	300/ *984*	200	13.9	VW3A4708	9.500/ *20.944*
ATV930D55M3C	50/ *164*	150/ *492*	300/ *984*	240	27.8	VW3A4709	15.000/ *33.069*
ATV930D75M3C	50/ *164*	150/ *492*	300/ *984*	305	27.8	VW3A4710	17.000/ *37.479*

(1) The maximum lengths are given as examples only, as they vary depending on the stray capacitance of the motors and the cables used. If motors are connected in parallel, it is the total length of all cables that should be taken into account.
(2) Nominal filter current.
(3) Values given depend on the nominal switching frequency of the drive. This frequency depends on the drive rating.

Variable speed drives

Altivar Process ATV900

Option: Additional EMC input filters

PF130917B

VW3A4703

PF130922

VW3A4708

Additional EMC input filters (continued)

References (continued)

Corresponding drive	Maximum length of shielded cable (1) (2) IEC/EN 61800-3 category C1 (3)	IEC/EN 61800-3 category C2 (3)	IEC/EN 61800-3 category C3 (3)	In (4)	If	Reference (5)	Weight
	m/*ft*	m/*ft*	m/*ft*	A	mA		kg/*lb*
Three-phase supply voltage: 380...480 V 50 Hz							
ATV930U07N4...U22N4(Z) ATV950U07N4...U22N4 ATV950U07N4E...U22N4E	50/ *164*	150/ *492*	300/ *984*	8	7.6	VW3A4701	2.000/ *4.409*
ATV930U30N4...U55N4(Z) ATV950U30N4...U55N4 ATV950U30N4E...U55N4E	50/ *164*	150/ *492*	300/ *984*	15	7.6	VW3A4702	2.400/ *5.291*
ATV930U75N4...D15N4(Z) ATV950U75N4...D15N4 ATV950U75N4E...D15N4E	50/ *164*	150/ *492*	300/ *984*	35	7.6	VW3A4703	4.100/ *9.039*
ATV930D18N4...D22N4(Z) ATV950D18N4...D22N4 ATV950D18N4E...D22N4E	50/ *164*	150/ *492*	300/ *984*	50	7.6	VW3A4704	5.200/ *11.464*
ATV930D30N4(Z) ATV950D30N4 ATV950D30N4E	50/ *164*	150/ *492*	300/ *984*	70	13.9	VW3A4705	6.100/ *13.448*
ATV930D37N4...D45N4(Z) ATV950D37N4...D45N4 ATV950D37N4E...D45N4E	50/ *164*	150/ *492*	300/ *984*	100	13.9	VW3A4706	6.500/ *14.330*
ATV930D55N4(Z) ATV930D55N4C ATV950D55N4 ATV950D55N4E	50/ *164*	150/ *492*	300/ *984*	160	13.9	VW3A4707	8.500/ *18.739*
ATV930D75N4...D90N4(Z) ATV930D75N4C...D90N4C ATV950D75N4...D90N4 ATV950D75N4E...D90N4E	50/ *164*	150/ *492*	300/ *984*	200	13.9	VW3A4708	9.500/ *20.944*
ATV930C11N4, ATV930C13N4 ATV930C11N4C, ATV930C13N4	–	150/ *492*	300/ *984*	240	27.8	VW3A4709	15.000/ *33.069*
ATV930C16N4, ATV930C16N4C	–	150/ *492*	300/ *984*	305	27.8	VW3A4710	17.000/ *37.479*
ATV930C22N4 ATV930C22N4C...C31N4C	50/ *164*	300/ *984*	–	546	599	VW3A4411	25.000/ *55.116*

IP21 protection kit for IP20 filters

Additional input filters provide IP20 protection as standard. This kit can be used to provide IP21 or UL Type 1 protection.

Description	Corresponding filter	Reference	Weight kg/*lb*
Mechanical kit including cover and cable clamps	**VW3A4701**	VW3A47901	0.200/ *0.441*
	VW3A4702	VW3A47902	0.300/ *0.661*
	VW3A4703	VW3A47903	0.400/ *0.882*
	VW3A4704	VW3A47904	0.500/ *1.102*
	VW3A4705	VW3A47905	0.900/ *1.984*
	VW3A4706	VW3A47906	1.000/ *2.205*
	VW3A4707	VW3A47907	1.500/ *3.307*
	VW3A4708	VW3A47908	2.000/ *4.409*

(1) The maximum lengths are given as examples only, as they vary depending on the stray capacitance of the motors and the cables used. If motors are connected in parallel, it is the total length of all cables that should be taken into account.
*(2) The associations of EMC filters with **ATV9●0U07N4/N4E...D22N4/N4E**, **ATV930C22N4** and **ATV930C22N4C...C31N4C** drives are also compliant with the IEC/EN 61800-3 category C1 standard with a 50 m/164 ft shielded cable length.*
(3) Values given depend on the nominal switching frequency of the drive. This frequency depends on the drive rating.
(4) Nominal filter current.
*(5) When used with **ATV950U07N4/N4E...D90N4/N4E** drives, the filter must be mounted in a separate enclosure to maintain IP55 protection for the installation.*

Variable speed drives

Altivar Process ATV900

Harmonic reduction

Option: Substitution kits for ATV61/71, line chokes

VW3A93111

Substitution kits for ATV61/71

This kit is used to install an Altivar Process drive in the place of an Altivar 61 or Altivar 71 drive using the same fixing holes. It includes the mechanical adapters required for mounting.

To ATV930 drive	From ATV61/71	Kit	Kit reference
ATV930U07N4Z...U22N4Z	S2	1	VW3A93111
	S3	2	VW3A93112
	S4	4	VW3A93113
ATV930U75N4Z...D11N4Z	S4	5	VW3A93114
	S5A	7	VW3A93115
ATV930D15N4Z...D22N4Z	S5B	9	VW3A93116
	S6		
ATV930D30N4Z...D45N4Z	S6	11	VW3A93117
	S7A		
	S8	13	VW3A93118
ATV930D55N4Z...D90N4Z	S8	14	VW3A93119
	S9	15	VW3A93120

PF142110

VW3A4556

Line chokes

A line choke can be used to reduce harmonic distortion of the current produced by the drive.

The choke values are defined for a voltage drop between phases of 3% and 5% of the nominal supply voltage. Values higher than this will cause loss of torque.

Line chokes allow ATV930U22Y6...D90Y6 drives to be used in applications requiring a harmonic level of THDi 48%.

Chokes must be installed upstream of the drive.

References

Corresponding drive	Line supply Isc	Line chokes			Reference	Weight
		Inductance value	Nominal current	Losses		
	kA	mH	A	W		kg/ *lb*
Three-phase supply voltage: 500…690 V 50/60 Hz						
ATV930U22Y6…U40Y6	22	10	4	45	VW3A4551	1.500/ *2.204*
ATV930U55Y6…U75Y6	22	4	10	65	VW3A4552	3.000/ *6.613*
ATV930D11Y6…D15Y6	22	2	16	75	VW3A4553	3.500/ *7.716*
ATV930D18Y6…D22Y6	22	1	30	90	VW3A4554	6.000/ *13.227*
ATV930D30Y6…D45Y6	22	0.5	60	94	VW3A4555	11.000/ *24.250*
ATV930D55Y6…D90Y6	22	0.3	100	260	VW3A4556	16.000/ *35.274*

Variable speed drives

Altivar Process ATV900

Option: Output filters

dv/dt filters

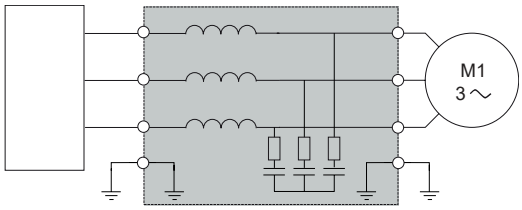

ATV930●●●M3 dv/dt filter
ATV930●●●M3C
ATV930●●●N4
ATV930●●●N4C
ATV950●●●N4
ATV950●●●N4E

Altivar Process drive with dv/dt filter

Presentation

Altivar Process drives with supply voltages of 200...240 V and 380...480 V operate with the following maximum motor cable lengths: 150 m/*492 ft* for shielded cables and 300 m/984 ft for unshielded cables.
For a supply voltage of 500...690 V, maximum motor cable lengths are 10 m/*32 ft* for shielded cables and 20 m/*65 ft* for unshielded cables.

To limit the impact of dv/dt and overvoltages in the motor, it is advisable to add an output filter if the motor insulation type does not conform to IEC 600034-25:
- For cables <50 m/*164.04 ft*, a dv/dt output filter
- For cables >50 m/*164.04 ft*, a sinus filter (see page 60857/14)

For further information, please consult the white paper An Improved Approach for Connecting VSD and Electric Motors.

Output filters are used to limit dv/dt at the motor terminals to 500 V/µs maximum for supply voltages up to 480 V, to 750 V/µs maximum for a supply voltage of 500 V, and to 1,000 V/µs maximum for a supply voltage of 690 V.

Output filters are designed to limit overvoltages at the motor terminals to less than:
- 800 V with a shielded cable 0 to 50 m (*0 to 164 ft)* long for a 400 V supply voltage
- 1,000 V with a shielded cable 50 to 150 m (*164 to 492 ft*) long for a 400 V supply voltage
- 1,500 V with a shielded cable 150 to 300 m (*492 to 984 ft*) long for a 400 V supply voltage (up to 500 m (*1,640 ft*) with an unshielded cable)
- 1,300 V for a 500 V supply voltage, cable length depending on the dv/dt filter combination
- 1,600 V for a 690 V supply voltage, cable length depending on the dv/dt filter combination

The performance of dv/dt filters will be affected if the maximum cable lengths are exceeded. For an application with several motors connected in parallel, the cable length must include all cabling. If a cable longer than that specified is used, the dv/dt filters may overheat.

The switching frequency must be less than 8 kHz.

dv/dt output filters

Corresponding drive	Maximum length of motor cable		Degree of protection	In *(3)*	Reference	Weight
	Maximum switching frequency *(1)*	Shielded cable *(2)*				
	kHz	m/*ft*	IP	A		kg/*lb*
Three-phase supply voltage: 200...240 V						
ATV930U07M3	4	300/*984*	20	6	VW3A5301	11.000/*24.251*
ATV930U15M3...U30M3	4	300/*984*	20	15	VW3A5302	12.000/*26.455*
ATV930U40M3	4	300/*984*	20	25	VW3A5303	12.000/*26.455*
ATV930U55M3...D11M3	4	300/*984*	20	50	VW3A5304	18.000/*39.683*
ATV930D15M3...D22M3	4	300/*984*	20	95	VW3A5305	19.000/*41.888*
ATV930D30M3...D45M3 ATV930D30M3C...D45M3C	2.5	300/*984*	00	180	VW3A5306	22.000/*48.502*
ATV930D55M3C...D75M3C	2.5	300/*984*	00	305	VW3A5307	40.000/*88.185*

(1) The filters are designed to operate in a switching frequency range of between 2 and 8 kHz.
(2) Values given depend on the nominal switching frequency of the drive. This frequency depends on the drive rating. These cable lengths are given as examples only as they can vary depending on the application. They correspond to motors conforming to IEC 6034-25 and NEMA MG1/31.2006.
(3) Nominal filter current.

Variable speed drives

Altivar Process ATV900

Option: Output filters

dv/dt filters

PF140366A

VW3A5304

dv/dt output filters (continued)

Corresponding drive	Maximum length of motor cable: Maximum switching frequency (1)	Maximum length of motor cable: Shielded cable (2)	Degree of protection	In (3)	Reference (4)	Weight
	kHz	m/*ft*	IP	A		kg/*lb*
Three-phase supply voltage: 380...480 V						
ATV930U07N4...U22N4 ATV950U07N4...U22N4 ATV950U07N4E...U22N4E	4	300/ *984*	20	6	VW3A5301	11.000/ *24.251*
ATV930U30N4...U55N4 ATV950U30N4...U55N4 ATV950U30N4E...U55N4E	4	300/ *984*	20	15	VW3A5302	12.000/ *26.455*
ATV930U75N4...D11N4 ATV950U75N4...D11N4 ATV950U75N4E...D11N4E	4	300/ *984*	20	25	VW3A5303	12.000/ *26.455*
ATV930D15N4...D22N4 ATV950D15N4...D22N4 ATV950D15N4E...D22N4E	4	300/ *984*	20	50	VW3A5304	18.000/ *39.683*
ATV930D30N4...D45N4 ATV950D30N4...D45N4 ATV950D30N4E...D45N4E	4	300/ *984*	20	95	VW3A5305	19.000/ *41.888*
ATV930D55N4...D90N4 ATV930D55N4C...D90N4C ATV950D55N4...D90N4 ATV950D55N4E...D90N4E	2.5	300/ *984*	00	180	VW3A5306	22.000/ *48.502*
ATV930C11N4...C16N4 ATV930C11N4C...C16N4C	2.5	300/ *984*	00	305	VW3A5307	40.000/ *88.185*
ATV930C22N4 ATV930C22N4C	2.5	250/ *820*	00	481	VW3A5106	58.000/ *127.868*
ATV930C25N4C...C31N4C	2.5	200/ *656*	00	759	VW3A5107	93.000/ *205.030*
Three-phase supply voltage: 500...690 V						
ATV930U22Y6..U55Y6	6	50/ *164*	00	90	VW3A5103	10.000/ *22.046*
ATV930U75Y6, ATV930D11Y6	6	50/ *164*	00	90	VW3A5103	10.000/ *22.046*
	6	100/ *328*	00	215	VW3A5104	15.500/ *34.171*
ATV930D15Y6…D30Y6	2.5	50/ *164*	00	90	VW3A5103	10.000/ *22.046*
	2.5	70/ *230*	00	90	**2 x** VW3A5103	20.000/ *44.001*
	4	35/ *213*	00	90		
	4	150/ *492*	00	215	VW3A5104	15.500/ *34.171*
	6	100/ *328*	00	215		
	6	150/ *492*	00	215	**2 x** VW3A5104	31.000/ *68.342*
ATV930D37Y6...D90Y6	4	100/ *328*	00	215	VW3A5104	15.500/ *34.171*
	4	150/ *492*	00	215	**2 x** VW3A5104	31.000/ *68.342*

(1) The filters are designed to operate in a switching frequency range of between 2 and 8 kHz.
(2) Values given depend on the nominal switching frequency of the drive. This frequency depends on the drive rating. These cable lengths are given as examples only as they can vary depending on the application. They correspond to motors conforming to IEC 6034-25 and NEMA MG1/31.2006.
(3) Nominal filter current.
*(4) When used with **ATV950U07N4/N4E...D90N4/N4E** drives, the filter must be mounted in a separate enclosure to maintain IP55 protection for the installation.*

Variable speed drives

Altivar Process ATV900

Option: Output filters

Protection kits for dv/dt filters

PF140375

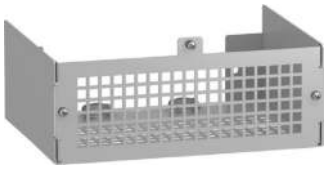

VW3A53902

IP21 protection kit for IP20 filters

Description	Corresponding dv/dt filter	Reference	Weight kg/ *lb*
Mechanical kit including cover and cable clamps	**VW3A5301** **VW3A5302** **VW3A5303**	VW3A53902	1.300/ *2.866*
	VW3A5304	VW3A53903	1.700/ *3.748*
	VW3A5305	VW3A53905	3.200/ *7.055*

Variable speed drives

Altivar Process ATV900

Option: Output filters

Sinus filters

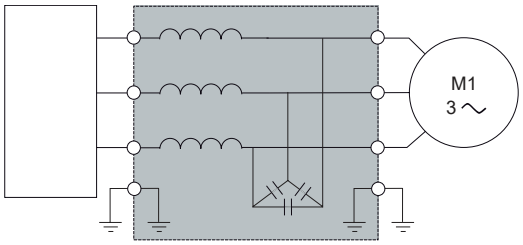

ATV930●●●M3
ATV930●●●M3C
ATV930●●●N4
ATV930●●●N4C
ATV930●●●Y6
ATV950●●●N4
ATV950●●●N4E

Sinus filter

Altivar Process drive with sinus filter

2

Presentation

Sinus filters allow Altivar Process drives to operate with long motor cables:
- 500 m *(1,640 ft)* with a shielded cable
- 1,000 m *(3,280 ft)* with an unshielded cable

The minimum switching frequency at which sinus filters can operate is 4 kHz. This is the default value when the sinus filter function is activated on the variable speed drive (please refer to the Programming Manual).

The output frequency must be less than 100 Hz.

At 100% load, the voltage drop is less than 8% with output frequency 50 Hz and switching frequency 2 kHz.

Applications

For applications requiring:
- Long cable runs
- Motors connected in parallel
- Submersible pumps sensitive to dv/dt
- An intermediate transformer between the drive and the motor

Sinus filters

Corresponding drive	Nominal current	Degree of protection	Reference *(1)*	Weight
	A	IP		kg/ *lb*
Three-phase supply voltage: 200...240 V				
ATV930U07M3	6	20	VW3A5401	10.000/ *22.046*
ATV930U15M3...U30M3	15	20	VW3A5402	13.500/ *29.762*
ATV930U40M3	25	20	VW3A5403	20.000/ *44.092*
ATV930U55M3...D11M3	50	20	VW3A5404	35.000/ *77.162*
ATV930D15M3...D22M3	95	20	VW3A5405	60.000/ *132.277*
ATV930D30M3...D45M3 ATV930D30M3C...D45M3C	180	00	VW3A5406	90.000/ *198.416*
ATV930D75M3C *(2)*	305	00	VW3A5407	134.000/ *295.419*

(1) The filters are designed to operate in a switching frequency range of between 4 and 8 kHz.
(2) In "Normal duty", apply a derating of Pn-1 to the drive nominal power with a minimum switching frequency of 4 kHz.
For example: An ATV930D75M3C drive with sinus filter can be used on a 55 kW motor.

Variable speed drives

Altivar Process ATV900

Option: Output filters

Sinus filters and protection kits

PF130975A

VW3A5404

F19_FILT_CPSCT17002

VW3A5216

F19_FILT_CPSCT17005

VW3A5219

Sinus filters (continued)

Corresponding drive	Maximum length of unshielded motor cable	Nominal current	Degree of protection	Reference (1) (2)	Weight
	m/ *ft*	A	IP		kg/ *lb*
Three-phase supply voltage: 380...480 V					
ATV930U07N4...U22N4 ATV950U07N4...U22N4 ATV950U07N4E...U22N4E	1,000/ *3,280*	6	20	VW3A5401	10.000/ *22.046*
ATV930U30N4...U55N4 ATV950U30N4...U55N4 ATV950U30N4E...U55N4E	1,000/ *3,280*	15	20	VW3A5402	13.500/ *29.762*
ATV930U75N4...D11N4 ATV950U75N4...D11N4 ATV950U75N4E...D11N4E	1,000/ *3,280*	25	20	VW3A5403	20.000/ *44.092*
ATV930D15N4...D22N4 ATV950D15N4...D22N4 ATV950D15N4E...D22N4E	1,000/ *3,280*	50	20	VW3A5404	35.000/ *77.162*
ATV930D30N4...D45N4 ATV950D30N4...D45N4 ATV950D30N4E...D45N4E	1,000/ *3,280*	95	20	VW3A5405	60.000/ *132.277*
ATV930D55N4...D90N4 ATV930D55N4C...D90N4C ATV950D55N4...D90N4 ATV950D55N4E...D90N4E	1,000/ *3,280*	180	00	VW3A5406	90.000/ *198.416*
ATV930C13N4...C16N4 ATV930C13N4C...C16N4C *(3)*	1,000/ *3,280*	305	00	VW3A5407	134.000/ *295.419*
ATV930C22N4 *(3)* ATV930C22N4C *(3)*	400/ *1,312*	400	00	VW3A5209	190.000/ *418.878*
ATV930C25N4C...C31N4C *(3)*	400/ *1,312*	600	00	VW3A5210	260.000/ *573.202*
Three-phase supply voltage: 500...690 V					
ATV930U22Y6...U75Y6	500/ *1,640*	13	20	VW3A5215	13.500/ *29.762*
ATV930D11Y6...D22Y6	500/ *1,640*	28	20	VW3A5216	25.400/ *55.997*
ATV930D30Y6...D37Y6	500/ *1,640*	45	20	VW3A5217	38.000/ *83.776*
ATV930D45Y6...D55Y6	750/ *2,460*	75	20	VW3A5218	75.000/ *165.347*
ATV930D75Y6...D90Y6	750/ *2,460*	115	20	VW3A5219	106.000/ *233.690*

IP21 protection kit for IP20 filters

Description	Corresponding sinus filter	Reference	Weight kg/ *lb*
Mechanical kit including cover and cable clamps	**VW3A5401** **VW3A5402**	VW3A53901	1.000/ *2.205*
	VW3A5403	VW3A53902	1.300/ *2.866*
	VW3A5404	VW3A53903	2.700/ *5.952*
	VW3A5405	VW3A53904	3.200/ *7.055*

(1) The filters are designed to operate in a switching frequency range of between 4 and 8 kHz.
*(2) When used with **ATV950U07N4/N4E...D90N4/N4E** drives, the filter must be mounted in a separate enclosure to maintain IP55 protection for the installation.*
(3) In "Normal Duty", apply a derating of Pn-1 to the drive nominal power with a minimum switching frequency of 4 kHz. For example:
- An ATV930C13N4C drive with sinus filter can be used on a 110 kW motor.
- An ATV930C16N4C drive with sinus filter can be used on a 132 kW motor.

Variable speed drives

Altivar Process ATV900
Option: Output filters
Common mode filters

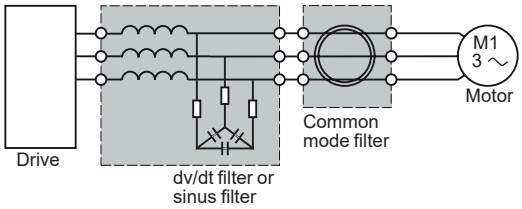

Altivar Process ATV900 drive with common mode filter

Presentation

Sinus filters or dv/dt filters reduce the overvoltage across windings and high frequency currents in differential mode. But they have no effect on the common mode current between phases and the cable shielding, or between the windings and the stator/rotor of the motor.

Common mode filters offer several benefits:
- Reduction of RFI (radio frequency interference) of the motor cable and improvement of the effectiveness of the EMC filter for conducted emissions
- Reduction of the high frequency currents circulating in the motor bearings to help to prevent them from being damaged

It is possible to use the common mode filter at the output terminals of the drive, the dv/dt filter, or the sinus filter.

***Note**: The selection of a common mode configuration depends on the type and length of motor cable. An abnormal increase of the temperature indicates a possible saturation. Additional filters should be used to avoid it.*

Common mode filters

Corresponding drive	Maximum length of unshielded cable			
	150 m/ *492 ft*	**300 m/ *984 ft***	**500 m/ *1,640 ft***	**1,000 m/ *3,281 ft***
ATV930U07M3...U40M3	VW3A5501	VW3A5502	2 x VW3A5501	VW3A5501 + VW3A5502
ATV930U55M3	VW3A5501	VW3A5502	VW3A5501 + VW3A5502	2 x VW3A5502
ATV930U75M3...D11M3	VW3A5503	VW3A5504	2 x VW3A5503	VW3A5503 + VW3A5504
ATV930D15M3...D22M3	VW3A5503	VW3A5504	VW3A5503 + VW3A5504	2 x VW3A5504
ATV930D30M3...D45M3 ATV930D30M3C...D45M3C	VW3A5503	VW3A5504	VW3A5503 + VW3A5504	2 x VW3A5504
ATV930D55M3C...D75M3C	VW3A5505	VW3A5506	VW3A5505 + VW3A5506	VW3A5506

Variable speed drives

Altivar Process ATV900

Option: Output filters

Common mode filters

PF130952A

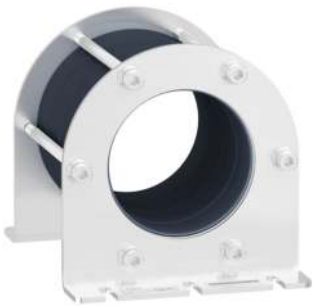

VW3A5503

Common mode filters *(continued)*

Corresponding drive	Maximum length of unshielded cable			
	150 m/ *492 ft*	**300 m/ *984 ft***	**500 m/ *1,640 ft***	**1,000 m/ *3,281 ft***
ATV930U07N4...U40N4 ATV950U07N4...U40N4 ATV950U07N4E...U40N4E	VW3A5501	VW3A5502	2 x VW3A5501	VW3A5501 + VW3A5502
ATV930U55N4 ATV950U55N4 ATV950U55N4E	VW3A5501	VW3A5502	VW3A5501 + VW3A5502	VW3A5501 + VW3A5502
ATV930U75N4...D11N4 ATV950U75N4...D11N4 ATV950U75N4E...D11N4E	VW3A5501	VW3A5502	VW3A5501 + VW3A5502	2 x VW3A5502
ATV930D15N4...D22N4 ATV950D15N4...D22N4 ATV950D15N4E...D22N4E	VW3A5503	VW3A5504	2 x VW3A5503	VW3A5503 + VW3A5504
ATV930D30N4...D90N4 ATV930D55N4C...D90N4C ATV950D30N4...D90N4 ATV950D30N4E...D90N4E	VW3A5503	VW3A5504	VW3A5503 + VW3A5504	2 x VW3A5504
ATV930C11N4...C16N4 ATV930C11N4C...C16N4C	VW3A5505	VW3A5506	2 x VW3A5505	2 x VW3A5506

Corresponding drive	Maximum length of shielded cable		
	150 m/ *492 ft*	**300 m/ *984 ft***	**500 m/ *1,640 ft***
ATV930U07N4...U40N4 ATV950U07N4...U40N4 ATV950U07N4E...U40N4E	VW3A5501	VW3A5502	2 x VW3A5501
ATV930U55N4 ATV950U55N4 ATV950U55N4E	VW3A5502	2 x VW3A5501	2 x VW3A5502
ATV930U75N4...D11N4 ATV950U75N4...D11N4 ATV950U75N4E...D11N4E	VW3A5502	2 x VW3A5501	2 x VW3A5502
ATV930D15N4...D22N4 ATV950D15N4...D22N4 ATV950D15N4E...D22N4E	VW3A5503	2 x VW3A5503	VW3A5503 + VW3A5504
ATV930D30N4...D90N4 ATV930D55N4C...D90N4C ATV950D30N4...D90N4 ATV950D30N4E...D90N4E	VW3A5504	VW3A5503 + VW3A5504	2 x VW3A5504
ATV930C11N4 ATV930C11N4C	VW3A5505	VW3A5506	VW3A5505 + VW3A5506
ATV930C13N4...C16N4 ATV930C13N4C...C16N4C	VW3A5506	2 x VW3A5505	2 x VW3A5506

2

Variable speed drives

Altivar Process ATV900

Option: ATV Regenerative units

ATVRegen_63440_CPFJR16009

ATVRD15N4

ATVRegen_63440_CPFJR16010

ATVRU75N4

Presentation

The main function of the ATV Regen product is to provide an option to regenerate energy back to the supply mains that is easy to set up for heavy braking applications such as material working, material handling, and hoisting.

This option is associated with Altivar ATV930●●●N4 and ATV950●●●N4 drives.
The harmonics performance of the braking unit is the same as for standard drives.

Features:

- Chemical class 3C3 conforming to IEC/EN 60721
- Mechanical class 3S2 conforming to IEC/EN 60721
- -10..50 °C/*14...122 °F* without derating, up to 60 °C/*140 °F* with derating
- Built-in EMC filter compliant with standard IEC 61800-3

Wiring concept

Generic wiring

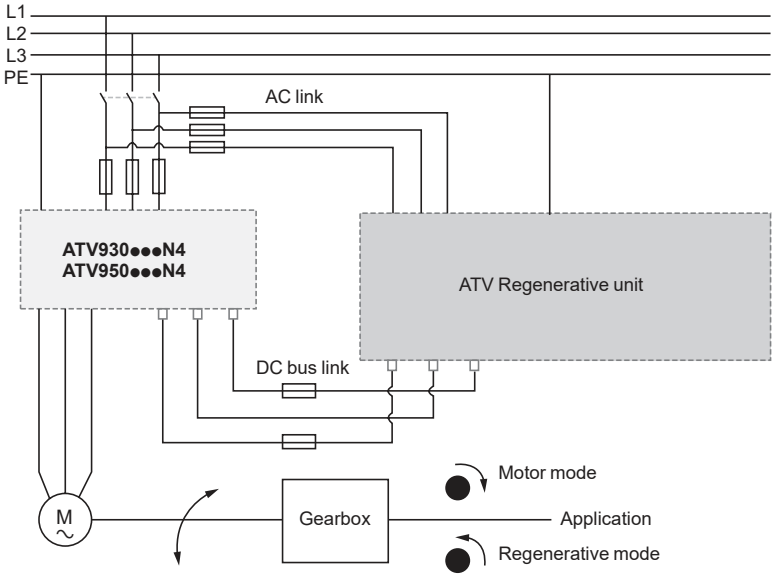

One drive for several Regenerative units

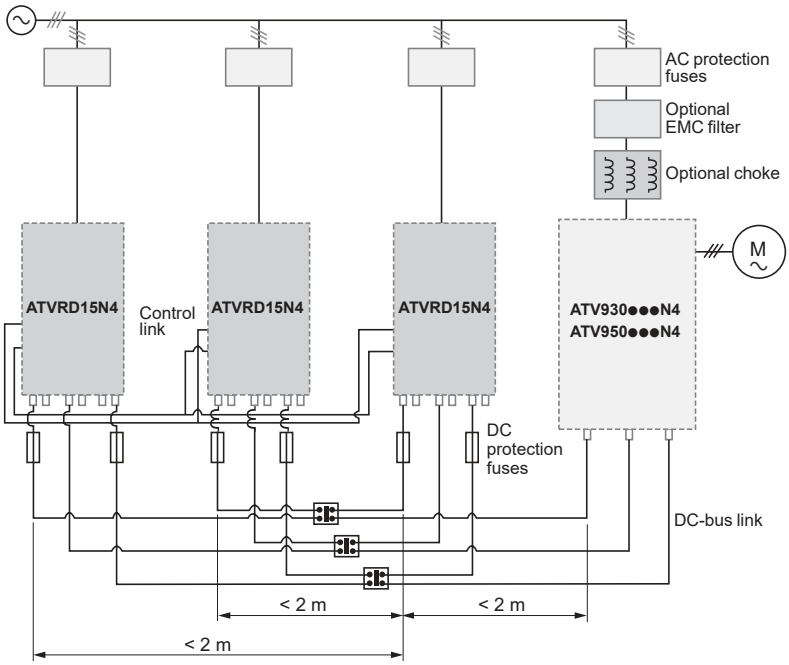

Wiring concept (continued)

Several drives with one Regenerative unit

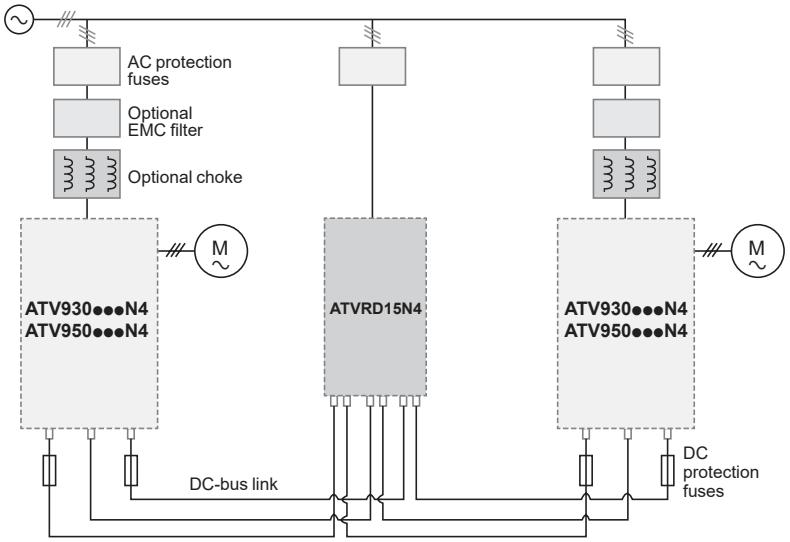

References

Corresponding drive	IP rating	Regenerative unit reference	Weight Kg/ *lb*
Supply voltage: 380…480 V 50/60 Hz			
ATV930●●●N4/N4Z, ATV950●●●N4: Refer to the Altivar Regenerative Unit User Manual to select the Regenerative unit	20	ATVRU75N4	6.000/ *13.228*
	20	ATVRD15N4	11.500/ *25.353*

Configure your drive system with the
Altivar Regenerative Unit: Sizing Tool

Variable speed drives

Altivar Process ATV900
Motor starters
Supply voltage 200...240 V

Applications

Circuit breaker/contactor/drive combinations help to ensure continuity of service in the installation.

The type of circuit breaker/contactor coordination selected can reduce maintenance costs in the event of a short-circuit on the drive input by minimizing the time required to make the necessary repairs and the cost of replacement equipment. The suggested combinations provide coordination according to the drive rating.

The drive controls the motor, provides a monitoring function against short-circuits between the drive and the motor, and helps protect the motor cable against overloads. Overload monitoring is provided by the drive's motor thermal monitoring function if this has been enabled. Otherwise, an external monitoring device such as a probe or thermal overload relay must be provided.

Selecting short-circuit protection devices (fuses or circuit breakers) is key to helping to protect the overall installation against potential damages due to short circuits. It is recommended that you refer to the "EcoStruxure™ Motor Control Configurator" and Installation Manual for more information.

PB108363

GV3L40

+

PB108335

LC1D40A●●

+

PF151202

ATV930D11M3

IEC standard motor starters

Motor Power (1)		Drive Reference	Circuit breaker Reference (2)	Rating	Irm	Line contactor Reference (3) (4)
kW	HP			A	A	
Three-phase supply voltage: 200…240 V 50/60 Hz						
0.75	1	**ATV930U07M3**	**GV2L08**	4	51	**LC1D09●●**
1.5	2	**ATV930U15M3**	**GV2L10**	6.3	78	
2.2	3	**ATV930U22M3**	**GV2L14**	10	138	
3	–	**ATV930U30M3**	**GV2L16**	14	170	**LC1D18●●**
4	5	**ATV930U40M3**	**GV2L20**	18	223	
5.5	7.5	**ATV930U55M3**	**GV2L22**	25	327	**LC1D25●●**
7.5	10	**ATV930U75M3**	**GV2L32**	32	448	**LC1D40A●●**
11	15	**ATV930D11M3**	**GV3L40**	40	560	
15	20	**ATV930D15M3**	**GV3L65**	65	910	**LC1D65A●●**
18.5	25	**ATV930D18M3**	**GV4L/LE80●**	80	480	**LC1D65A●●**
22	30	**ATV930D22M3**				**LC1D80●●**
30	40	**ATV930D30M3/M3C**	**GV4L/LE115●**	115	690	**LC1D95●●**
37	50	**ATV930D37M3/M3C**	**NSX160●MA150**	150	1,350	**LC1D115●●**
45	60	**ATV930D45M3/M3C**				**LC1D150●●**
55	75	**ATV930D55M3C**	**NSX250●MA220**	220	1,980	**LC1G185●●●●**
75	100	**ATV930D75M3C**	**NSX400● Micrologic 1.3-M**	320	1,600	**LC1G265●●●●**

(1) Standard power ratings for 230 V 50/60 Hz 4-pole motors.
The values expressed in HP conform to the NEC (National Electrical Code).
(2) For references to be completed, replace the dot with the letter corresponding to the breaking performance of the circuit breaker (F, N, H, S, or L). You can use the "EcoStruxure™ Motor Control Configurator" tool to support your customization.
Breaking capacity of circuit breakers according to standard IEC 60947-2:

Circuit breaker	Icu (kA) for 200…240 V						
		B	F	N	H	S	L
GV2L08...L20	>100	–	–	–	–	–	–
GV2L22...L32	50	–	–	–	–	–	–
GV3L40...L65	100	–	–	–	–	–	–
GV4L80/115●	–	50	–	100	–	–	–
GV4LE80/115●	–	50	–	100	–	120	–
NSX160●MA150	–	–	85	90	100	120	150
NSX250●MA220	–	–	85	90	100	120	150
NSX400● Micrologic 1.3-M	–	–	40	85	100	120	150

(3) Composition of contactors:
LC1D09...D150: 3 poles + 1 NO auxiliary contact + 1 NC auxiliary contact
LC1G185...G265: 3 poles
To add auxiliary contacts or other accessories, please refer to the "TeSys" catalog.
(4) Replace ●● with the control circuit voltage code indicated in the table below:

	Volts ∿	24	48	110	220	230	240
LC1D09...D150	50 Hz	**B5**	**E5**	**F5**	**M5**	**P5**	**U5**
	60 Hz	**B6**	**E6**	**F6**	**M6**	**–**	**U6**
	50/60 Hz	**B7**	**E7**	**F7**	**M7**	**P7**	**U7**

	AC/DC volts	24...48	48...130	100...250	200...500
LC1G185...265		**BEEA**	**EHEN**	**KUEN**	**LSEA**

For other voltages available between 24 V and 660 V, or a DC control circuit, please consult our Customer Care Teams.

Variable speed drives

Altivar Process ATV900

Motor starters

Supply voltage 380...415 V

PB114911

GV4LE115

+

PB108308

LC1D80●●

+

PF151203

ATV930D45N4

IEC standard motor starters

Motor Power (1) kW	HP	Drive Reference	Circuit breaker Reference (2)	Rating A	Irm A	Line contactor Reference (3) (4)
Three-phase supply voltage: 380…415 V 50/60 Hz						
0.75	1	ATV930U07N4	GV2L07	2.5	33.5	LC1D09●●
1.5	2	ATV930U15N4	GV2L08	4	51	
2.2	3	ATV930U22N4	GV2L10	6.3	78	
3	–	ATV930U30N4	GV2L14	10	138	
4	5	ATV930U40N4				
5.5	7.5	ATV930U55N4	GV2L16	14	170	LC1D18●●
7.5	10	ATV930U75N4	GV2L20	18	223	
11	15	ATV930D11N4	GV2L22	25	327	LC1D25●●
15	20	ATV930D15N4	GV3L32	32	448	
18.5	25	ATV930D18N4	GV3L40	40	560	LC1D40A●●
22	30	ATV930D22N4	GV3L50	50	700	LC1D50A●●
30	40	ATV930D30N4	GV3L65	65	910	
37	50	ATV930D37N4	GV4L/LE80●	80	480	LC1D65A●●
45	60	ATV930D45N4	GV4L/LE115●	115	690	LC1D80●●
55	75	ATV930D55N4/N4C				
75	100	ATV930D75N4/N4C	NSX160●MA150	150	1,350	LC1D115●●
90	125	ATV930D90N4/N4C	NSX250●MA220	220	1,980	LC1G185●●●●
110	150	ATV930C11N4/N4C				LC1G225●●●●
132	200	ATV930C13N4/N4C	NSX400● Micrologic 1.3-M	320	1,600	LC1G265●●●●
160	250	ATV930C16N4/N4C				LC1G330●●●●
220	350	ATV930C22N4/N4C	NSX630● Micrologic 1.3-M	500	3,000	LC1G400●●●●
250	400	ATV930C25N4C				LC1G500●●●●
315	500	ATV930C31N4C	NS800L Micrologic 2 or 5	800	1,600	LC1G630●●●●

(1) Standard power ratings for 400 V 50/60 Hz 4-pole motors.
The values expressed in HP conform to the NEC (National Electrical Code).
(2) For references to be completed, replace the dot with the letter corresponding to the breaking performance of the circuit breaker (F, N, H, S, or L). You can use the "EcoStruxure™ Motor Control Configurator" tool to support your customization.
Breaking capacity of circuit breakers according to standard IEC 60947-2:

Circuit breaker	Icu (kA) for 380…415 V						
		B	F	N	H	S	L
GV2L07...L14	100	–	–	–	–	–	–
GV2L16...L22	50	–	–	–	–	–	–
GV3L32...L65	50	–	–	–	–	–	–
GV4L80/115●	–	25	–	50	–	–	–
GV4LE80/115●	–	25	–	50	–	100	–
NSX160●MA150	–	–	36	50	70	100	150
NSX250●MA220	–	–	36	50	70	100	150
NSX400●, NSX630●	–	–	36	50	70	100	150
NS800L Micrologic 2 or 5	–	–	–	–	–	–	150

(3) Composition of contactors:
LC1D09...D115: 3 poles + 1 NO auxiliary contact + 1 NC auxiliary contact
LC1G185...G630: 3 poles
To add auxiliary contacts or other accessories, please refer to the "TeSys" catalog.
(4) Replace ●● with the control circuit voltage code indicated in the table below:

	Volts ∿		24	48	110	220	230	240
LC1D09...D115	50 Hz		B5	E5	F5	M5	P5	U5
	60 Hz		B6	E6	F6	M6	–	U6
	50/60 Hz		B7	E7	F7	M7	P7	U7
	AC/DC volts	24...48	48...130		100...250		200...500	
LC1G185...500		BEEA	EHEN		KUEN		LSEA	
LC1G630		–	EHEN		KUEN		LSEA	

For other voltages available between 24 V and 660 V, or a DC control circuit, please consult our Customer Care Teams.

Variable speed drives

Altivar Process ATV900

Motor starters

Supply voltage 380...415 V

PB114912

GV4L115

+

PB108308

LC1D80●●

+

PF151215A

ATV950D45N4

IEC standard motor starters

Motor Power (1) kW	HP	Drive Reference	Circuit breaker Reference (2)	Rating A	Irm A	Line contactor Reference (3) (4) (5)
Three-phase supply voltage: 380…415 V 50/60 Hz						
0.75	1	ATV950U07N4/N4E	GV2L07	2.5	33.5	LC1D09●●
1.5	2	ATV950U15N4/N4E	GV2L08	4	51	
2.2	3	ATV950U22N4/N4E	GV2L10	6.3	78	
3	–	ATV950U30N4/N4E	GV2L14	10	138	
4	5	ATV950U40N4/N4E				
5.5	7.5	ATV950U55N4/N4E	GV2L16	14	170	LC1D18●●
7.5	10	ATV950U75N4/N4E	GV2L20	18	223	
11	15	ATV950D11N4/N4E	GV2L22	25	327	LC1D25●●
15	20	ATV950D15N4/N4E	GV3L32	32	448	
18.5	25	ATV950D18N4/N4E	GV3L40	40	560	LC1D40A●●
22	30	ATV950D22N4/N4E	GV3L50	50	700	LC1D50A●●
30	40	ATV950D30N4/N4E	GV3L65	65	910	
37	50	ATV950D37N4/N4E	GV4L/LE80●	80	480	LC1D65A●●
45	60	ATV950D45N4/N4E	GV4L/LE115●	115	690	LC1D80●●
55	75	ATV950D55N4/N4E				
75	100	ATV950D75N4/N4E	NSX160●MA150	150	1,350	LC1D115●●
90	125	ATV950D90N4/N4E	NSX250●MA220	220	1,980	LC1G185●●●●

(1) Standard power ratings for 400 V 50/60 Hz 4-pole motors.
The values expressed in HP conform to the NEC (National Electrical Code).
(2) For references to be completed, replace the dot with the letter corresponding to the breaking performance of the circuit breaker (F, N, H, S, or L). You can use the "EcoStruxure™ Motor Control Configurator" tool to support your customization.
Breaking capacity of circuit breakers according to standard IEC 60947-2:

Circuit breaker	Icu (kA) for 380…415 V						
		B	F	N	H	S	L
GV2L07...L14	100	–	–	–	–	–	–
GV2L16...L22	50	–	–	–	–	–	–
GV3L32...L65	50	–	–	–	–	–	–
GV4L80/115●	–	25	–	50	–	–	–
GV4LE80/115●	–	25	–	50	–	100	–
NSX160●MA150	–	–	36	50	70	100	150
NSX250●MA220	–	–	36	50	70	100	150

(3) Composition of contactors:
LC1D09...D115: 3 poles + 1 NO auxiliary contact + 1 NC auxiliary contact
LC1G185: 3 poles
To add auxiliary contacts or other accessories, please refer to the "TeSys" catalog.
(4) Replace ●● with the control circuit voltage code indicated in the table below:

	Volts ∿		24	48	110	220	230	240
LC1D09...D115	50 Hz		B5	E5	F5	M5	P5	U5
	60 Hz		B6	E6	F6	M6	–	U6
	50/60 Hz		B7	E7	F7	M7	P7	U7
	AC/DC volts	24...48	48...130		100...250		200...500	
LC1G185		BEEA	EHEN		KUEN		LSEA	

For other voltages available between 24 V and 660 V, or a DC control circuit, please consult our Customer Care Teams.

(5) When used with ATV950U07N4/N4E...D90N4/N4E drives, the motor starters must be installed in a separate enclosure to maintain IP55 protection for the installation.

Variable speed drives

Altivar Process ATV900

Motor starters

Supply voltage 440 V

102872

GV2L08

+

PB108300

LC1D09●●

+

PF151200

ATV930U15N4

IEC standard motor starters

Motor Power (1) kW	HP	Drive Reference	Circuit breaker Reference (2)	Rating A	Irm A	Line contactor Reference (3) (4)
Three-phase supply voltage: 440 V 50/60 Hz						
0.75	1	ATV930U07N4	GV2L07	2.5	33.5	LC1D09●●
1.5	2	ATV930U15N4	GV2L08	4	51	
2.2	3	ATV930U22N4	GV2L10	6.3	78	
3	–	ATV930U30N4				
4	5	ATV930U40N4	GV2L14	10	138	
5.5	7.5	ATV930U55N4	GV2L16	14	170	LC1D18●●
7.5	10	ATV930U75N4				
11	15	ATV930D11N4	GV2L22	25	327	LC1D25●●
15	20	ATV930D15N4	GV3L32	32	448	
18.5	25	ATV930D18N4	GV3L40	40	560	LC1D40A●●
22	30	ATV930D22N4	GV3L50	50	700	LC1D50A●●
30	40	ATV930D30N4	GV3L65	65	910	LC1D50A●●
37	50	ATV930D37N4				LC1D65A●●
45	60	ATV930D45N4	GV4L/LE80●	80	480	LC1D65A●●
55	75	ATV930D55N4/N4C	GV4L/LE115●	115	690	LC1D80●●
75	100	ATV930D75N4/N4C	NSX160●MA150	150	1,350	LC1D115●●
90	125	ATV930D90N4/N4C	NSX250●MA220	220	1,980	LC1D115●●
110	150	ATV930C11N4/N4C				LC1G185●●●●
132	200	ATV930C13N4/N4C				
160	250	ATV930C16N4/N4C	NSX400● Micrologic 1.3-M	320	1,600	LC1G265●●●●
220	350	ATV930C22N4/N4C	NSX630● Micrologic 1.3-M	500	3,000	LC1G400●●●●
250	400	ATV930C25N4C				LC1G500●●●●
315	500	ATV930C31N4C	NS800L Micrologic 2 or 5	800	1,600	LC1G630●●●●

(1) Standard power ratings for 400 V 50/60 Hz 4-pole motors.
The values expressed in HP conform to the NEC (National Electrical Code).

(2) For references to be completed, replace the dot with the letter corresponding to the breaking performance of the circuit breaker (F, N, H, S, or L). You can use the "EcoStruxure™ Motor Control Configurator" tool to support your customization.
Breaking capacity of circuit breakers according to standard IEC 60947-2:

Circuit breaker	Icu (kA) for 440 V	B	F	N	H	S	L
GV2L07...L10	>100	–	–	–	–	–	–
GV2L14...L22	50	–	–	–	–	–	–
GV3L32...L65	50	–	–	–	–	–	–
GV4L80/115●	–	25	–	50	–	–	–
GV4LE80/115●	–	25	–	50	–	70	–
NSX160●MA150	–	–	35	50	65	90	130
NSX250●MA220	–	–	35	50	65	90	130
NSX400● Micrologic 1.3-M	–	–	30	42	65	90	130
NSX630●	–	–	30	42	65	90	130
NS800L Micrologic 2 or 5	–	–	–	–	–	–	130

(3) Composition of contactors:
LC1D09...D115: 3 poles + 1 NO auxiliary contact + 1 NC auxiliary contact
To add auxiliary contacts or other accessories, please refer to the "TeSys" catalog.

(4) Replace ●● with the control circuit voltage code indicated in the table below:

	Volts ∿	24	48	110	220	230	240
LC1D09...D115	50 Hz	B5	E5	F5	M5	P5	U5
	60 Hz	B6	E6	F6	M6	–	U6
	50/60 Hz	B7	E7	F7	M7	P7	U7

	AC/DC volts	24...48	48...130	100...250	200...500
LC1G185...500		BEEA	EHEN	KUEN	LSEA
LC1G630		–	EHEN	KUEN	LSEA

For other voltages available between 24 V and 660 V, or a DC control circuit, please consult our Customer Care Teams.

Variable speed drives

Altivar Process ATV900

Motor starters

Supply voltage 440 V

PB103196

NSX250●MA220

+

105517

LC1D115●●

+

PF151216A

ATV950D90N4

IEC standard motor starters

Motor Power (1)		Drive Reference	Circuit breaker Reference (2)	Rating	Irm	Line contactor Reference (3) (4) (5)
kW	HP			A	A	
Three-phase supply voltage: 440 V 50/60 Hz						
0.75	1	ATV950U07N4/N4E	GV2L07	2.5	33.5	LC1D09●●
1.5	2	ATV950U15N4/N4E	GV2L08	4	51	
2.2	3	ATV950U22N4/N4E	GV2L10	6.3	78	
3	–	ATV950U30N4/N4E				
4	5	ATV950U40N4/N4E	GV2L14	10	138	
5.5	7.5	ATV950U55N4/N4E	GV2L16	14	170	LC1D18●●
7.5	10	ATV950U75N4/N4E				
11	15	ATV950D11N4/N4E	GV2L22	25	327	LC1D25●●
15	20	ATV950D15N4/N4E	GV3L32	32	448	
18.5	25	ATV950D18N4/N4E	GV3L40	40	560	LC1D40A●●
22	30	ATV950D22N4/N4E	GV3L50	50	700	LC1D50A●●
30	40	ATV950D30N4/N4E	GV3L65	65	910	LC1D50A●●
37	50	ATV950D37N4/N4E				LC1D65A●●
45	60	ATV950D45N4/N4E	GV4L/LE80●	80	480	LC1D65A●●
55	75	ATV950D55N4/N4E	GV4L/LE115●	115	690	LC1D80●●
75	100	ATV950D75N4/N4E	NSX160●MA150	150	1,350	LC1D115●●
90	125	ATV950D90N4/N4E	NSX250●MA220	220	1,980	

(1) Standard power ratings for 400 V 50/60 Hz 4-pole motors.
The values expressed in HP conform to the NEC (National Electrical Code).
(2) For references to be completed, replace the dot with the letter corresponding to the breaking performance of the circuit breaker (F, N, H, S, or L). You can use the "EcoStruxure™ Motor Control Configurator" tool to support your customization.
Breaking capacity of circuit breakers according to standard IEC 60947-2:

Circuit breaker	Icu (kA) for 440 V						
		B	F	N	H	S	L
GV2L07...L10	>100	–	–	–	–	–	–
GV2L14...L22	50	–	–	–	–	–	–
GV3L32...L65	50	–	–	–	–	–	–
GV4L80/115●	–	25	–	50	–	–	–
GV4LE80/115●	–	25	–	50	–	70	–
NSX160●MA150	–	–	35	50	65	90	130
NSX250●MA220	–	–	35	50	65	90	130

(3) Composition of contactors:
LC1D09...D115: 3 poles + 1 NO auxiliary contact + 1 NC auxiliary contact
To add auxiliary contacts or other accessories, please refer to the "TeSys" catalog.
(4) Replace ●● with the control circuit voltage code indicated in the table below:

	Volts ∿	24	48	110	220	230	240
LC1D09...D115	50 Hz	B5	E5	F5	M5	P5	U5
	60 Hz	B6	E6	F6	M6	–	U6
	50/60 Hz	B7	E7	F7	M7	P7	U7

For other voltages available between 24 V and 660 V, or a DC control circuit, please consult our Customer Care Teams.

(5) When used with ATV950U07N4/N4E...D90N4/N4E drives, the motor starters must be installed in a separate enclosure to maintain IP55 protection for the installation.

Variable speed drives

Altivar Process ATV900

Motor starters

Supply voltage 500...690 V

GV2L10

+

LC1D09●●

+

ATV930U22Y6

IEC standard motor starters

Motor Power		Drive Reference	Circuit breaker Reference *(1)*	Rating	Irm	Line contactor Reference
kW	*HP*			A	A	
Three-phase supply voltage: 500 V 50/60 Hz						
1.5	*2*	**ATV930U22Y6**	**GV2L10**	6.3	78	**LC1D09●●**
2.2	*3*	**ATV930U30Y6**				
3	–	**ATV930U40Y6**	**GV2L14**	10	138	**LC1D18●●**
4	*5*	**ATV930U55Y6**				
5.5	*7.5*	**ATV930U75Y6**	**GV2L16**	14	170	**LC1D25●●**
7.5	*10*	**ATV930D11Y6**	**GV2L20**	18	223	
11	*15*	**ATV930D15Y6**	**GV2L22**	25	327	**LC1D40A●●**
15	*20*	**ATV930D18Y6**	**GV3L25**	25	350	
18.5	*25*	**ATV930D22Y6**	**GV3L32**	32	448	
22	*30*	**ATV930D30Y6**	**GV3L40**	40	560	
30	*40*	**ATV930D37Y6**	**GV3L50**	50	700	**LC1D50A●●**
37	*50*	**ATV930D45Y6**	**GV3L65**	65	910	**LC1D65A●●**
45	*60*	**ATV930D55Y6**	**NSX100●MA100**	100	600	**LC1D80●●**
55	*75*	**ATV930D75Y6**				
75	*100*	**ATV930D90Y6**	**NSX160●MA150**	150	1,350	**LC1D150●●**
Three-phase supply voltage: 690 V 50/60 Hz						
2.2	*3*	**ATV930U22Y6**	**GV2L08**	4	51	**LC1D09●●**
3	–	**ATV930U30Y6**	**GV2L10**	6.3	78	
4	*5*	**ATV930U40Y6**	**GV2L14**	10	138	**LC1D18●●**
5.5	*7.5*	**ATV930U55Y6**				
7.5	*10*	**ATV930U75Y6**	**GV2L16**	14	170	
11	*15*	**ATV930D11Y6**	**GV2L20**	18	223	
15	*20*	**ATV930D15Y6**	**GV2L22**	25	327	**LC1D25●●**
18.5	*25*	**ATV930D18Y6**	**GV3L25**	25	350	**LC1D40A●●**
22	*30*	**ATV930D22Y6**	**GV3L32**	32	448	
30	*40*	**ATV930D30Y6**	**GV3L40**	40	560	
37	*50*	**ATV930D37Y6**	**GV3L50**	50	700	**LC1D50A●●**
45	*60*	**ATV930D45Y6**	**GV3L65**	65	910	**LC1D65A●●**
55	*75*	**ATV930D55Y6**	**NSX100●MA100**	100	600	**LC1D80●●**
75	*100*	**ATV930D75Y6**				
90	*125*	**ATV930D90Y6**	**NSX160●MA150**	150	1,350	**LC1D150●●**

(1) For references to be completed, replace ● with the letter corresponding to the breaking performance of the circuit breaker (H, HB1, or HB2). You can use the "EcoStruxure™ Motor Control Configurator" tool to support your customization.

Circuit breaker	Supply voltage (V)	Icu (kA)			
			H	HB1	HB2
GV2L07...L10	500	>100	–	–	–
	690	4	–	–	–
GV2L14...L22	500	10	–	–	–
	690	4	–	–	–
GV2L25...L32	500	12	–	–	–
	690	4	–	–	–
GV3L40...L66	500	12	–	–	–
	690	5	–	–	–
NSX100●MA100	500	–	50	85	100
	690	–	–	75	100
NSX160●MA150	500	–	50	–	–
NSX250●MA220	690	–	–	75	100

Variable speed drives

Altivar Process ATV900

IP21 drives: 200...240 V

PF151200

200...240 V IP21/UL Type 1 drives		
Overall dimensions		
Reference	**W x H x D**	
	mm	***in.***
ATV930U07M3	144 x 350 x 206	*5.67 x 13.78 x 8.11*
ATV930U15M3	144 x 350 x 206	*5.67 x 13.78 x 8.11*
ATV930U22M3	144 x 350 x 206	*5.67 x 13.78 x 8.11*
ATV930U30M3	144 x 350 x 206	*5.67 x 13.78 x 8.11*
ATV930U40M3	144 x 350 x 206	*5.67 x 13.78 x 8.11*
ATV930U55M3	171 x 409 x 236	*6.73 x 16.10 x 9.29*
ATV930U75M3	211 x 545.9 x 235	*8.31 x 21.49 x 9.25*
ATV930D11M3	211 x 545.9 x 235	*8.31 x 21.49 x 9.25*
ATV930D15M3	226 x 673 x 274	*8.90 x 26.50 x 10.79*
ATV930D18M3	226 x 673 x 274	*8.90 x 26.50 x 10.79*
ATV930D22M3	226 x 673 x 274	*8.90 x 26.50 x 10.79*
ATV930D30M3	290 x 922 x 325.5	*11.42 x 36.30 x 12.81*
ATV930D37M3	290 x 922 x 325.5	*11.42 x 36.30 x 12.81*
ATV930D45M3	290 x 922 x 325.5	*11.42 x 36.30 x 12.81*

200…240 V IP21/UL Type 1 drives without braking unit		
Overall dimensions		
Reference	**W x H x D**	
	mm	***in.***
ATV930D30M3C	290 x 922 x 325.5	*11.42 x 36.30 x 12.81*
ATV930D37M3C	290 x 922 x 325.5	*11.42 x 36.30 x 12.81*
ATV930D45M3C	290 x 922 x 325.5	*11.42 x 36.30 x 12.81*
ATV930D55M3C	320 x 852 x 393	*12.60 x 33.54 x 15.47*
With IP21/UL Type 1 conformity kit	320 x 1,157 x 393	*12.60 x 45.55 x 15.47*
ATV930D75M3C	320 x 852 x 393	*12.60 x 33.54 x 15.47*
With IP21/UL Type 1 conformity kit	320 x 1,157 x 393	*12.60 x 45.55 x 15.47*

Variable speed drives

Altivar Process ATV900

IP21 drives: 380...480 V

PF151200

380...480 V IP21/UL Type 1 and cabinet integration drives		
Overall dimensions		
Reference	**W x H x D**	
	mm	***in.***
ATV930U07N4	144 x 350 x 206	*5.67 x 13.78 x 8.11*
ATV930U07N4Z	130 x 285 x 196	*5.12 x 11.22 x 7.72*
ATV930U15N4	144 x 350 x 206	*5.67 x 13.78 x 8.11*
ATV930U15N4Z	130 x 285 x 196	*5.12 x 11.22 x 7.72*
ATV930U22N4	144 x 350 x 206	*5.67 x 13.78 x 8.11*
ATV930U22N4Z	130 x 285 x 196	*5.12 x 11.22 x 7.72*
ATV930U30N4	144 x 350 x 206	*5.67 x 13.78 x 8.11*
ATV930U30N4Z	130 x 285 x 196	*5.12 x 11.22 x 7.72*
ATV930U40N4	144 x 350 x 206	*5.67 x 13.78 x 8.11*
ATV930U40N4Z	130 x 285 x 196	*5.12 x 11.22 x 7.72*
ATV930U55N4	144 x 350 x 206	*5.67 x 13.78 x 8.11*
ATV930U55N4Z	130 x 285 x 196	*5.12 x 11.22 x 7.72*
ATV930U75N4	171 x 409 x 236	*6.73 x 16.10 x 9.29*
ATV930U75N4Z	155 x 345 x 225	*6.10 x 13.58 x 8.86*
ATV930D11N4	171 x 409 x 236	*6.73 x 16.10 x 9.29*
ATV930D11N4Z	155 x 345 x 225	*6.10 x 13.58 x 8.86*
ATV930D15N4	211 x 545.9 x 235	*8.31 x 21.49 x 9.25*
ATV930D15N4Z	195 x 480 x 225.5	*7.68 x 18.90 x 8.88*
ATV930D18N4	211 x 545.9 x 235	*8.31 x 21.49 x 9.25*
ATV930D18N4Z	195 x 480 x 225.5	*7.68 x 18.90 x 8.88*
ATV930D22N4	211 x 545.9 x 235	*8.31 x 21.49 x 9.25*
ATV930D22N4Z	195 x 480 x 225.5	*7.68 x 18.90 x 8.88*
ATV930D30N4	226 x 673 x 274	*8.90 x 26.50 x 10.79*
ATV930D30N4Z	210 x 597 x 262	*8.27 x 23.50 x 10.31*
ATV930D37N4	226 x 673 x 274	*8.90 x 26.50 x 10.79*
ATV930D37N4Z	210 x 597 x 262	*8.27 x 23.50 x 10.31*
ATV930D45N4	226 x 673 x 274	*8.90 x 26.50 x 10.79*
ATV930D45N4Z	210 x 597 x 262	*8.27 x 23.50 x 10.31*
ATV930D55N4	290 x 922 x 325.5	*11.42 x 36.30 x 12.81*
ATV930D55N4Z	265 x 748 x 307	*10.43 x 29.45 x 12.09*
ATV930D75N4	290 x 922 x 325.5	*11.42 x 36.30 x 12.81*
ATV930D75N4Z	265 x 748 x 307	*10.43 x 29.45 x 12.09*
ATV930D90N4	290 x 922 x 325.5	*11.42 x 36.30 x 12.81*
ATV930D90N4Z	265 x 748 x 307	*10.43 x 29.44 x 12.08*
ATV930C11N4	320 x 1,205 x 393	*12.60 x 47.44 x 15.47*
ATV930C13N4	320 x 1,205 x 393	*12.60 x 47.44 x 15.47*
ATV930C16N4	320 x 1,205 x 393	*12.60 x 47.44 x 15.47*
ATV930C22N4	440 x 1,195 x 380	*17.32 x 47.05 x 14.96*
With IP21/UL Type 1 conformity kit	*(1)*	

(1) For further information, please consult our Customer Care Teams.

PF151200

ATV930-950_63124_CPSCT16004

380…480 V IP21/UL Type 1 drives without braking unit		
Overall dimensions		
Reference	**W x H x D**	
	mm	***in.***
ATV930D55N4C	290 x 922 x 325.5	*11.42 x 36.30 x 12.81*
ATV930D75N4C	290 x 922 x 325.5	*11.42 x 36.30 x 12.81*
ATV930D90N4C	290 x 922 x 325.5	*11.42 x 36.30 x 12.81*
ATV930C11N4C	320 x 852 x 393	*12.60 x 33.54 x 15.47*
With IP21/UL Type 1 conformity kit	*(1)*	
ATV930C13N4C	320 x 852 x 393	*12.60 x 33.54 x 15.47*
With IP21/UL Type 1 conformity kit	*(1)*	
ATV930C16N4C	320 x 852 x 393	*12.60 x 33.54 x 15.47*
With IP21/UL Type 1 conformity kit	*(1)*	
ATV930C22N4C	440 x 1,195 x 380	*17.32 x 47.05 x 14.96*
With IP21/UL Type 1 conformity kit	*(1)*	
ATV930C25N4C	598 x 1,195 x 380	*23.54 x 47.05 x 14.96*
With IP21/UL Type 1 conformity kit	*(1)*	
ATV930C31N4C	598 x 1,195 x 380	*23.54 x 47.05 x 14.96*
With IP21/UL Type 1 conformity kit	*(1)*	

(1) For further information, please consult our Customer Care Teams.

Variable speed drives

Altivar Process ATV900

IP00 drives: 500...690 V
IP21 drives: 380...440 V

ATV630-650_62317_CPSCT17002B

ATV930-950_63124_CPSCT17003B

PF151206B

500...690 V IP00 drives

Overall dimensions

Reference	W x H x D	
	mm	*in.*
ATV930U22Y6	246 x 420 x 242	*9.69 x 16.54 x 9.53*
With IP20/UL Type 1 conformity kit	246 x 567 x 242	*9.69 x 22.32 x 9.53*
ATV930U30Y6	246 x 420 x 242	*9.69 x 16.54 x 9.53*
With IP20/UL Type 1 conformity kit	246 x 567 x 242	*9.69 x 22.32 x 9.53*
ATV930U40Y6	246 x 420 x 242	*9.69 x 16.54 x 9.53*
With IP20/UL Type 1 conformity kit	246 x 567 x 242	*9.69 x 22.32 x 9.53*
ATV930U55Y6	246 x 420 x 242	*9.69 x 16.54 x 9.53*
With IP20/UL Type 1 conformity kit	246 x 567 x 242	*9.69 x 22.32 x 9.53*
ATV930U75Y6	246 x 420 x 242	*9.69 x 16.54 x 9.53*
With IP20/UL Type 1 conformity kit	246 x 567 x 242	*9.69 x 22.32 x 9.53*
ATV930D11Y6	246 x 420 x 242	*9.69 x 16.54 x 9.53*
With IP20/UL Type 1 conformity kit	246 x 567 x 242	*9.69 x 22.32 x 9.53*
ATV930D15Y6	246 x 420 x 242	*9.69 x 16.54 x 9.53*
With IP20/UL Type 1 conformity kit	246 x 567 x 242	*9.69 x 22.32 x 9.53*
ATV930D18Y6	246 x 420 x 242	*9.69 x 16.54 x 9.53*
With IP20/UL Type 1 conformity kit	246 x 567 x 242	*9.69 x 22.32 x 9.53*
ATV930D22Y6	246 x 420 x 242	*9.69 x 16.54 x 9.53*
With IP20/UL Type 1 conformity kit	246 x 567 x 242	*9.69 x 22.32 x 9.53*
ATV930D30Y6	246 x 420 x 242	*9.69 x 16.54 x 9.53*
With IP20/UL Type 1 conformity kit	246 x 567 x 242	*9.69 x 22.32 x 9.53*
ATV930D37Y6	331 x 630 x 297	*13.03 x 24.80 x 11.69*
With IP20/UL Type 1 conformity kit	331 x 822 x 297	*13.03 x 32.36 x 11.69*
ATV930D45Y6	331 x 630 x 297	*13.03 x 24.80 x 11.69*
With IP20/UL Type 1 conformity kit	331 x 822 x 297	*13.03 x 32,36 x 11.69*
ATV930D55Y6	331 x 630 x 297	*13.03 x 24.80 x 11.69*
With IP20/UL Type 1 conformity kit	331 x 822 x 297	*13.03 x 32.36 x 11.69*
ATV930D75Y6	331 x 630 x 297	*13.03 x 24.80 x 11.69*
With IP20/UL Type 1 conformity kit	331 x 822 x 297	*13.03 x 32.36 x 11.69*
ATV930D90Y6	331 x 630 x 297	*13.03 x 24.80 x 11.69*
With IP20/UL Type 1 conformity kit	331 x 822 x 297	*13.03 x 32.36 x 11.69*

Floor-standing 380...440 V IP21 drives

Overall dimensions

Reference	W x H x D *(1)*	
	mm	*in.*
ATV930C11N4F	400 x 2,150 x 642	*15.75 x 84.65 x 25.28*
ATV930C13N4F	400 x 2,150 x 642	*15.75 x 84.65 x 25.28*
ATV930C16N4F	400 x 2,150 x 642	*15.75 x 84.65 x 25.28*
ATV930C20N4F	600 x 2,150 x 642	*23.62 x 84.65 x 25.28*
ATV930C25N4F	600 x 2,150 x 642	*23.62 x 84.65 x 25.28*
ATV930C31N4F	600 x 2,150 x 642	*23.62 x 84.65 x 25.28*

(1) The total depth includes a door handle of 42 mm/1.65 in.

Variable speed drives

Altivar Process ATV900
IP55 drives: 380...480 V
IP54 drives: 380...440 V

PF151214A

PF130884

PF151221B

380...480 V IP55 drives

Overall dimensions		
Reference	**W x H x D**	
	mm	***in.***
ATV950U07N4	264 x 678 x 272	*10.39 x 26.69 x 10.71*
ATV950U15N4	264 x 678 x 272	*10.39 x 26.69 x 10.71*
ATV950U22N4	264 x 678 x 272	*10.39 x 26.69 x 10.71*
ATV950U30N4	264 x 678 x 272	*10.39 x 26.69 x 10.71*
ATV950U40N4	264 x 678 x 272	*10.39 x 26.69 x 10.71*
ATV950U55N4	264 x 678 x 272	*10.39 x 26.69 x 10.71*
ATV950U75N4	264 x 678 x 299	*10.39 x 26.69 x 11.77*
ATV950D11N4	264 x 678 x 299	*10.39 x 26.69 x 11.77*
ATV950D15N4	264 x 678 x 299	*10.39 x 26.69 x 11.77*
ATV950D18N4	264 x 678 x 299	*10.39 x 26.69 x 11.77*
ATV950D22N4	264 x 678 x 299	*10.39 x 26.69 x 11.77*
ATV950D30N4	290 x 910 x 340	*11.42 x 35.83 x 13.39*
ATV950D37N4	290 x 910 x 340	*11.42 x 35.83 x 13.39*
ATV950D45N4	290 x 910 x 340	*11.42 x 35.83 x 13.39*
ATV950D55N4	345 x 1,250 x 375	*13.58 x 49.21 x 14.76*
ATV950D75N4	345 x 1,250 x 375	*13.58 x 49.21 x 14.76*
ATV950D90N4	345 x 1,250 x 375	*13.58 x 49.21 x 14.76*

380...480 V IP55 drives with Vario disconnect switch

Reference	**W x H x D** *(1)*	
	mm	***in.***
Overall dimensions		
ATV950U07N4E	264 x 678 x 300	*10.39 x 26.69 x 11.81*
ATV950U15N4E	264 x 678 x 300	*10.39 x 26.69 x 11.81*
ATV950U22N4E	264 x 678 x 300	*10.39 x 26.69 x 11.81*
ATV950U30N4E	264 x 678 x 300	*10.39 x 26.69 x 11.81*
ATV950U40N4E	264 x 678 x 300	*10.39 x 26.69 x 11.81*
ATV950U55N4E	264 x 678 x 330	*10.39 x 26.69 x 12.99*
ATV950U75N4E	264 x 678 x 330	*10.39 x 26.69 x 12.99*
ATV950D11N4E	264 x 678 x 330	*10.39 x 26.69 x 12.99*
ATV950D15N4E	264 x 678 x 330	*10.39 x 26.69 x 12.99*
ATV950D18N4E	264 x 678 x 330	*10.39 x 26.69 x 12.99*
ATV950D22N4E	264 x 678 x 330	*10.39 x 26.69 x 12.99*
ATV950D30N4E	290 x 910 x 401	*11.42 x 35.83 x 15.79*
ATV950D37N4E	290 x 910 x 401	*11.42 x 35.83 x 15.79*
ATV950D45N4E	290 x 910 x 401	*11.42 x 35.83 x 15.79*
ATV950D55N4E	345 x 1,250 x 436	*13.58 x 49.21 x 17.17*
ATV950D75N4E	345 x 1,250 x 436	*13.58 x 49.21 x 17.17*
ATV950D90N4E	345 x 1,250 x 436	*13.58 x 49.21 x 17.17*

Floor-standing 380...440 V IP54 drives

Overall dimensions		
Reference	**W x H x D** *(2)*	
	mm	***in.***
ATV950C11N4F	400 x 2,350 x 664	*15.75 x 92.52 x 26.14*
ATV950C13N4F	400 x 2,350 x 664	*15.75 x 92.52 x 26.14*
ATV950C16N4F	400 x 2,350 x 664	*15.75 x 92.52 x 26.14*
ATV950C20N4F	600 x 2,350 x 664	*23.62 x 92.52 x 26.14*
ATV950C25N4F	600 x 2,350 x 664	*23.62 x 92.52 x 26.14*
ATV950C31N4F	600 x 2,350 x 664	*23.62 x 92.52 x 26.14*

(1) The total depth includes a switch handle of 64 mm/2.52 in.
(2) The total depth includes a door handle of 64 mm/2.52 in. The total height includes a plinth of 200 mm/7.87 in.

Presentation: page 1/11
References: page 2/2
Configuration and runtime tools: page 2/14
Combinations: page 2/18

Variable speed drives

Altivar Process ATV900

Options: Braking units and braking resistors

Braking units		
Overall dimensions		
Reference	W x H x D	
	mm	in.
VW3A7101	103 x 1,190 x 380	4.06 x 46.85 x 14.96
VW3A7102	310 x 1,150 x 380	12.20 x 45.28 x 14.96
VW3A7105	216 x 658 x 303	8.50 x 25.91 x 11.93
VW3A7106	216 x 658 x 303	8.50 x 25.91 x 11.93

Braking resistors		
Overall dimensions		
Reference	W x H x D	
	mm	in.
VW3A7730	105 x 295 x 100	4.13 x 11.61 x 3.94
VW3A7731	105 x 345 x 100	4.13 x 13.58 x 3.94
VW3A7732	175 x 345 x 100	6.89 x 13.58 x 3.94
VW3A7733	190 x 570 x 180	7.48 x 22.44 x 7.09
VW3A7734	190 x 640 x 180	7.48 x 25.20 x 7.09
VW3A7735	190 x 640 x 180	7.48 x 25.20 x 7.09
VW3A7736	485 x 410 x 485	19.09 x 16.14 x 19.09
VW3A7737	485 x 410 x 485	19.09 x 16.14 x 19.09
VW3A7738	485 x 410 x 445	19.09 x 16.14 x 17.52
VW3A7740	105 x 465 x 100	4.13 x 18.31 x 3.94
VW3A7741	175 x 465 x 100	6.89 x 18.31 x 3.94
VW3A7742	190 x 570 x 180	7.48 x 22.44 x 7.09
VW3A7743	290 x 570 x 180	11.42 x 22.44 x 7.09
VW3A7744	450 x 490 x 180	17.72 x 19.29 x 7.09
VW3A7745	485 x 610 x 485	19.09 x 24.02 x 19.09
VW3A7746	485 x 610 x 485	19.09 x 24.02 x 19.09
VW3A7747	485 x 1,020 x 485	19.09 x 40.16 x 19.09
VW3A7748	485 x 610 x 485	19.09 x 24.02 x 19.09
VW3A7750	290 x 570 x 180	11.42 x 22.44 x 7.09
VW3A7751	390 x 570 x 180	15.35 x 22.44 x 7.09
VW3A7752	485 x 610 x 485	19.09 x 24.02 x 19.09
VW3A7753	485 x 1,020 x 605	19.09 x 40.16 x 23.82
VW3A7754	485 x 820 x 1,035	19.09 x 32.28 x 40.75
VW3A7755	485 x 1,020 x 1,035	19.09 x 40.16 x 40.75
VW3A7756	485 x 1,020 x 1,285	19.09 x 40.16 x 50.59
VW3A7757	485 x 1,020 x 1,285	19.09 x 40.16 x 50.59

Variable speed drives

Altivar Process ATV900

Options: Passive filters 400V

PF140347

Passive filters: 400 V 50 Hz three-phase supply		
Overall dimensions		
Reference	**W x H x D**	
	mm	***in.***
VW3A46101	190 x 332.11 x 205.5	*7.48 x 13.08 x 8.09*
VW3A46102	190 x 332.11 x 205.5	*7.48 x 13.08 x 8.09*
VW3A46103	190 x 332.11 x 205.5	*7.48 x 13.08 x 8.09*
VW3A46104	232 x 436.11 x 247.5	*9.13 x 17.17 x 9.74*
VW3A46105	232 x 436.11 x 247.5	*9.13 x 17.17 x 9.74*
VW3A46106	378 x 594.08 x 242	*14.88 x 23.39 x 9.53*
VW3A46107	378 x 594.08 x 242	*14.88 x 23.39 x 9.53*
VW3A46108	378 x 623.6 x 333	*14.88 x 24.55 x 13.11*
VW3A46109	378 x 623.6 x 333	*14.88 x 24.55 x 13.11*
VW3A46110	418 x 736.8 x 333	*16.46 x 29.01 x 13.11*
VW3A46111	418 x 736.8 x 333	*16.46 x 29.01 x 13.11*
VW3A46112	418 x 767.6 x 400	*16.46 x 30.22 x 15.75*
VW3A46113	418 x 767.6 x 400	*16.46 x 30.22 x 15.75*
VW3A46114	468 x 900.06 x 448.5	*18.43 x 35.44 x 17.66*
VW3A46115	468 x 900.06 x 448.5	*18.43 x 35.44 x 17.66*
VW3A46116	468 x 900.06 x 448.5	*18.43 x 35.44 x 17.66*
VW3A46118	468 x 900.06 x 448.5	*18.43 x 35.44 x 17.66*
VW3A46119	468 x 900.06 x 510	*18.43 x 35.44 x 20.08*
VW3A46120	190 x 332.11 x 205.5	*7.48 x 13.08 x 8.09*
VW3A46121	190 x 332.11 x 205.5	*7.48 x 13.08 x 8.09*
VW3A46122	190 x 332.11 x 205.5	*7.48 x 13.08 x 8.09*
VW3A46123	232 x 436.11 x 247.5	*9.13 x 17.17 x 9.74*
VW3A46124	232 x 436.11 x 247.5	*9.13 x 17.17 x 9.74*
VW3A46125	378 x 594.08 x 242	*14.88 x 23.39 x 9.53*
VW3A46126	378 x 594.08 x 242	*14.88 x 23.39 x 9.53*
VW3A46127	378 x 623.6 x 333	*14.88 x 24.55 x 13.11*
VW3A46128	378 x 623.6 x 333	*14.88 x 24.55 x 13.11*
VW3A46129	418 x 736.8 x 333	*16.46 x 29.01 x 13.11*
VW3A46130	418 x 736.8 x 333	*16.46 x 29.01 x 13.11*
VW3A46131	418 x 767.6 x 400	*16.46 x 30.22 x 15.75*
VW3A46132	418 x 767.6 x 400	*16.46 x 30.22 x 15.75*
VW3A46133	468 x 900.06 x 448.5	*18.43 x 35.44 x 17.66*
VW3A46134	468 x 900.06 x 448.5	*18.43 x 35.44 x 17.66*
VW3A46135	468 x 900.06 x 510	*18.43 x 35.44 x 20.08*
VW3A46137	468 x 900.06 x 510	*18.43 x 35.44 x 20.08*
VW3A46138	468 x 900.06 x 510	*18.43 x 35.44 x 20.08*
VW3A46139	190 x 332.11 x 205.5	*7.48 x 13.08 x 8.09*
VW3A46140	190 x 332.11 x 205.5	*7.48 x 13.08 x 8.09*
VW3A46141	190 x 332.11 x 205.5	*7.48 x 13.08 x 8.09*
VW3A46142	232 x 436.11 x 247.5	*9.13 x 17.17 x 9.74*
VW3A46143	232 x 436.11 x 247.5	*9.13 x 17.17 x 9.74*
VW3A46144	378 x 594.08 x 242	*14.88 x 23.39 x 9.53*
VW3A46145	378 x 594.08 x 242	*14.88 x 23.39 x 9.53*
VW3A46146	378 x 594.08 x 242	*14.88 x 23.39 x 9.53*
VW3A46147	378 x 623.6 x 333	*14.88 x 24.55 x 13.11*
VW3A46148	378 x 623.6 x 333	*14.88 x 24.55 x 13.11*
VW3A46149	418 x 736.8 x 333	*16.46 x 29.01 x 13.11*
VW3A46150	418 x 736.8 x 333	*16.46 x 29.01 x 13.11*

Variable speed drives

Altivar Process ATV900

Options: Passive filters 460V

Passive filters: 460 V 60 Hz three-phase supply		
Overall dimensions		
Reference	**W x H x D**	
	mm	***in.***
VW3A46151	418 x 767.6 x 400	*16.46 x 30.22 x 15.75*
VW3A46152	418 x 767.6 x 400	*16.46 x 30.22 x 15.75*
VW3A46153	468 x 900.06 x 448.5	*18.43 x 35.44 x 17.66*
VW3A46154	468 x 900.06 x 448.5	*18.43 x 35.44 x 17.66*
VW3A46155	468 x 900.06 x 448.5	*18.43 x 35.44 x 17.66*
VW3A46157	468 x 900.06 x 510	*18.43 x 35.44 x 20.08*
VW3A46158	190 x 332.11 x 205.5	*7.48 x 13.08 x 8.09*
VW3A46159	190 x 332.11 x 205.5	*7.48 x 13.08 x 8.09*
VW3A46160	190 x 332.11 x 205.5	*7.48 x 13.08 x 8.09*
VW3A46161	232 x 436.11 x 247.5	*9.13 x 17.17 x 9.74*
VW3A46162	232 x 436.11 x 247.5	*9.13 x 17.17 x 9.74*
VW3A46163	378 x 594.08 x 242	*14.88 x 23.39 x 9.53*
VW3A46164	378 x 594.08 x 242	*14.88 x 23.39 x 9.53*
VW3A46165	378 x 594.08 x 242	*14.88 x 23.39 x 9.53*
VW3A46166	378 x 623.6 x 333	*14.88 x 24.55 x 13.11*
VW3A46167	378 x 623.6 x 333	*14.88 x 24.55 x 13.11*
VW3A46168	418 x 736.8 x 333	*16.46 x 29.01 x 13.11*
VW3A46169	418 x 736.8 x 333	*16.46 x 29.01 x 13.11*
VW3A46170	418 x 767.6 x 400	*16.46 x 30.22 x 15.75*
VW3A46171	418 x 767.6 x 400	*16.46 x 30.22 x 17.75*
VW3A46172	468 x 900.06 x 448.5	*18.43 x 35.44 x 17.66*
VW3A46173	468 x 900.06 x 510	*18.43 x 35.44 x 20.08*
VW3A46174	468 x 900.06 x 510	*18.43 x 35.44 x 20.08*
VW3A46176	468 x 900.06 x 510	*18.43 x 35.44 x 20.08*

Variable speed drives

Altivar Process ATV900

Options: EMC filters, dv/dt filters, and AC chokes

PF130924

PF140366A

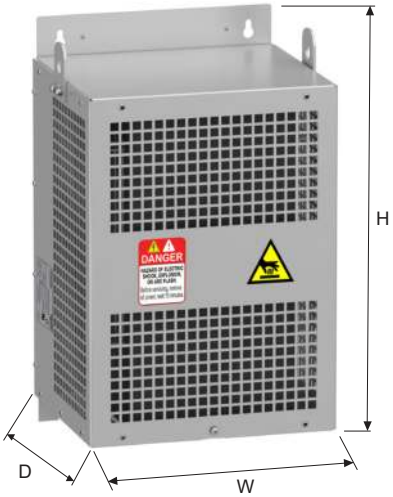

PF142110

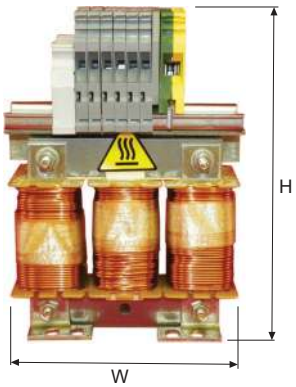

Additional EMC input filters

Overall dimensions

Reference	W x H x D	
	mm	*in.*
VW3A4411	800 x 261 x 139	*31.50 x 10.28 x 5.47*
VW3A4701	75 x 220 x 130	*2.95 x 8.66 x 5.12*
VW3A4702	75 x 240 x 140	*2.95 x 9.45 x 5.51*
VW3A4703	80 x 302 x 155	*3.15 x 11.89 x 6.10*
VW3A4704	90 x 283 x 165	*3.54 x 11.14 x 6.50*
VW3A4705	100 x 328 x 175	*3.94 x 12.91 x 6.89*
VW3A4706	120 x 340 x 180	*4.72 x 13.39 x 7.09*
VW3A4707	130 x 395 x 240	*5.12 x 15.55 x 9.45*
VW3A4708	200 x 455 x 320	*7.87 x 17.91 x 12.60*
VW3A4709	260 x 520 x 117	*10.24 x 20.47 x 4.61*
VW3A4710	260 x 520 x 117	*10.24 x 20.47 x 4.61*

dv/dt filters

Overall dimensions

Reference	W x H x D	
	mm	*in.*
VW3A5103	234 x 226 x 126	*9.21 x 8.90 x 4.96*
VW3A5104	170 x 250 x 100	*6.69 x 9.84 x 3.94*
VW3A5106	245 x 250 x 139	*9.65 x 9.84 x 5.47*
VW3A5107	320 x 250 x 220	*12.60 x 9.84 x 8.66*
VW3A5301	295 x 535 x 215	*11.61 x 21.06 x 8.46*
VW3A5302	295 x 535 x 215	*11.61 x 21.06 x 8.46*
VW3A5303	295 x 535 x 215	*11.61 x 21.06 x 8.46*
VW3A5304	300 x 560 x 245	*11.81 x 22.05 x 9.65*
VW3A5305	300 x 610 x 245	*11.81 x 24.02 x 9.65*
VW3A5306	380 x 350 x 235	*14.96 x 13.78 x 9.25*
VW3A5307	420 x 360 x 270	*16.54 x 14.14 x 10.63*

AC chokes

Overall dimensions

Reference	W x H x D	
	mm	*in.*
VW3A4551	100 x 135 x 60	*3.94 x 5.31 x 2.36*
VW3A4552	130 x 155 x 90	*5.12 x 6.10 x 3.54*
VW3A4553	130 x 155 x 90	*5.12 x 6.10 x 3.54*
VW3A4554	155 x 170 x 135	*6.10 x 6.69 x 5.31*
VW3A4555	180 x 210 x 165	*7.09 x 8.27 x 6.50*
VW3A4556	270 x 210 x 180	*10.63 x 8.27 x 7.09*

Variable speed drives

Altivar Process ATV900

Options: Sinus filters, common mode filters, and Regenerative units

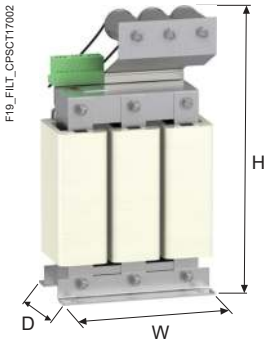

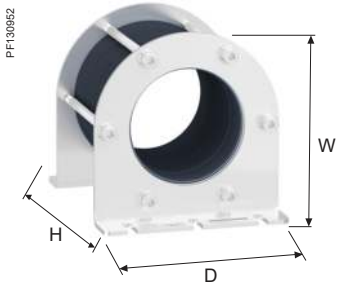

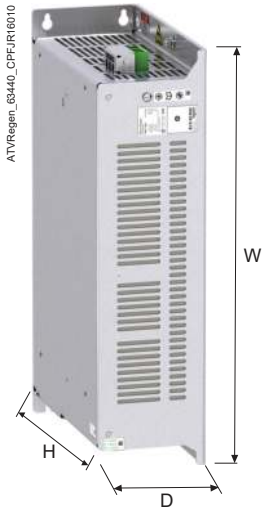

Sinus filters		
Overall dimensions		
Reference	**W x H x D**	
	mm	***in.***
VW3A5209	480 x 340 x 600	*18.90 x 13.39 x 23.62*
VW3A5210	480 x 370 x 710	*18.90 x 14.57 x 27.95*
VW3A5401	220 x 455 x 210	*8.66 x 17.91 x 8.27*
VW3A5402	220 x 455 x 210	*8.66 x 17.91 x 8.27*
VW3A5403	295 x 530 x 215	*11.61 x 20.87 x 8.46*
VW3A5404	300 x 560 x 245	*11.81 x 22.05 x 9.65*
VW3A5405	380 x 760 x 285	*14.96 x 29.92 x 11.22*
VW3A5406	430 x 350 x 495	*16.93 x 13.78 x 19.49*
VW3A5407	460 x 370 x 565	*18.11 x 14.57 x 22.24*
VW3A5215	246 x 420 x 242	*9.69 x 16.54 x 9.53*
VW3A5216	171 x 409 x 233	*6.73 x 16.10 x 9.17*
VW3A5217	331 x 822 x 297	*13.03 x 32.36 x 11.69*
VW3A5218	331 x 822 x 297	*13.03 x 32.36 x 11.69*
VW3A5219	331 x 822 x 297	*13.03 x 32.36 x 11.69*
VW3A5215	246 x 420 x 242	*9.69 x 16.54 x 9.53*
VW3A5216	171 x 409 x 233	*6.73 x 16.10 x 9.17*
VW3A5217	331 x 822 x 297	*13.03 x 32.36 x 11.69*
VW3A5218	331 x 822 x 297	*13.03 x 32.36 x 11.69*
VW3A5219	331 x 822 x 297	*13.03 x 32.36 x 11.69*

Common mode filters		
Overall dimensions		
Reference	**W x H x D**	
	mm	***in.***
VW3A5501	66 x 119.2 x 66	*2.60 x 4.69 x 2.60*
VW3A5502	66 x 163.8 x 66	*2.60 x 6.45 x 2.60*
VW3A5503	127.5 x 161 x 127.5	*5.02 x 6.34 x 5.02*
VW3A5504	127.5 x 210 x 127.5	*5.02 x 8.27 x 5.02*
VW3A5505	191 x 197 x 196	*7.52 x 7.76 x 7.72*
VW3A5506	191 x 256 x 196	*7.52 x 10.08 x 7.72*

Regenerative units 380…480 V power supply		
Overall dimensions		
Reference	**W x H x D**	
	mm	***in.***
ATVRU75N4	80 x 337 x 175	*3.15 x 13.27 x 6.89*
ATVRD15N4	105 x 399 x 235	*4.13 x 15.71 x 9.25*

Contents

3 - Drives for integration

- **Presentation** ..... page 3/2
- **Drive products for integration 380...480 V** ..... page 3/6
- **Modular drives, based on APM (Altivar Process Modular)**
  - 400 V 50/60 Hz supply, Standard ..... page 3/8
  - 440 V 50/60 Hz supply, Standard ..... page 3/9
  - 480 V 50/60 Hz supply, Standard ..... page 3/10
  - 500 V 50/60 Hz supply, Standard ..... page 3/11
  - 600 V 50/60 Hz supply, Standard ..... page 3/12
  - 690 V 50/60 Hz supply, Standard ..... page 3/13
  - 400 V 50/60 Hz supply, Low Harmonic/Regen ..... page 3/14
  - 440 V 50/60 Hz supply, Low Harmonic/Regen ..... page 3/15
  - 480 V 50/60 Hz supply, Low Harmonic/Regen ..... page 3/16
  - 500 V 50/60 Hz supply, Low Harmonic/Regen ..... page 3/17
  - 600 V 50/60 Hz supply, Low Harmonic/Regen ..... page 3/18
  - 690 V 50/60 Hz supply, Low Harmonic/Regen ..... page 3/19
- **Modular drives, based on APM-L (Altivar Process Modular - Liquid-cooled)**
  - 400 V 50/60 Hz supply ..... page 3/20
  - 440 V 50/60 Hz supply ..... page 3/21
  - 480 V 50/60 Hz supply ..... page 3/22
  - 500 V 50/60 Hz supply ..... page 3/23
  - 600 V 50/60 Hz supply ..... page 3/24
  - 690 V 50/60 Hz supply ..... page 3/25
- **Braking units**
  - 400 V supply ..... page 3/26
  - 440 V supply ..... page 3/29
  - 480 V supply ..... page 3/32
  - 500 V supply ..... page 3/35
  - 600 V supply ..... page 3/36
  - 690 V supply ..... page 3/37

Variable speed drives

Altivar Process ATV900

Drives for integration

Altivar Process Modular Standard

Altivar Process Modular Standard Reduced Height

Altivar Process Modular Low Harmonic/Regen

General presentation of the offer

Altivar Process drives for cabinet integration offer a cost-effective solution for installation into cabinets and separate enclosures thanks to their compact and robust design. These drive variants simplify cabinet design and allow quick installation and commissioning. Altivar Process also offers a range of low harmonic drives.

Altivar Process Modular concept

Altivar Process Modular is ready to build into cabinets to create high power drive solutions with minimum dimensions that withstand harsh environments.

A powerful drives range from 75 kW/*125 HP* up to 1800 kW/*2500 HP* at 400 V supply voltage and up to 2600 kW/*2600 HP* at 690 V supply voltage can be created by combining sub-assemblies and accessories such as power modules, braking units, control units, options, and mechanical accessories.

Altivar Process Modular brings a new approach where sub-assemblies are used to build drives locally:

- A power module section to be combined in different drive architectures
- Control units that make the family differentiation of the power architecture between ATV600 and ATV900 drives
- Optional kits and accessories for easy enclosure integration

Optimized cabinet design

The Altivar Process Modular drives offer has been developed to reduce the engineering time required to design cabinet-mounted drives solutions, consequently decreasing the time to market and the cost of the solution.

Altivar Process Modular brings flexible solutions for special integration constraints with IP21/IP54 protection and robust design with two offers:

- Standard: integration in 2 m/*6.56 ft* height and 600 mm/*23.62 in.* depth cabinets
- Reduced Height: integration in 1.6 m/*5.25 ft* height and 600 mm/*23.62 in.* depth cabinets

Altivar Process Modular Liquid-cooled modules allow installation in cabinets up to IP66 protection for harsh environmental conditions.

These power-intensive drives offers integrate:

- Drive power and control modules
- Line chokes to limit THDi levels for standard version and less than 3% THDi for Low Harmonic/Regen version
- A filter to help protect the motor against the effects of dv/dt
- Accessible terminals to simplify the motor wiring and power wiring

IP21 (UL Type 1) integration creates a common cooling air flow for the power and control sections.

The IP54 (UL Type 12) mechanical option introduces a system for separating the cooling air flow between the power and control sections, allowing operation in a highly polluted environment as well as optimum management of thermal stress in the plant room. Both designs allow a maximum incoming air temperature of 50 °C/*122 °F* with derating (class 3K3 according to IEC/EN 60721-3-3).

Variable speed drives

Altivar Process ATV900

Drives for integration

Power module and power fan inside drawer

Product features

The Altivar Process Modular drives offer has been developed to meet the requirements of some of the most demanding applications and enclosure requirements and the most recent standards and regulations.

Compliance with electromagnetic compatibility requirements has been incorporated into the design of the modular process drives, which simplifies installation and provides an economical means of helping to ensure equipment meets marking requirements.

- Altivar Process Modular drives have category C3 EMC filters and highly efficient integrated motor filters for dv/dt and common mode reduction and voltage peak limitation that allow 300 m/*980 ft* of shielded motor cables (category C3 environment) and 500 m/*1,640 ft* of unshielded motor cables (category C4 enviroment).
- THDi ⩽ 48% for 80 to 100% load, which is used to maintain an optimum power factor on the most common operating range
- Embedded line choke technology complying with standard IEC 61000-3-12
- Prewired electric core components tested by Schneider Electric laboratories and test centers
- Sinus filter option: contact your local Schneider Electric sales office for support.

Simple maintenance

Altivar Process Modular drives can significantly cut downtime of your assets by means of easily replaceable core components:

- Same power module with optimized weight and wheels for standard drives for all power ranges
- Same power fan inside a drawer accessible from the front face for all power modules
- Spare parts designed for easy and fast intervention in the field

Altivar Process Modular Liquid-cooled

Liquid-cooled drives

Altivar Process Modular Liquid-cooled drives for cabinet integration offer a modular high power solution for installation into cabinets and separate enclosures. Thanks to the optimized liquid-cooling concept, these drives are suitable for operation in a very harsh environment. The integrated liquid cooling allows optimal dissipation of the heat losses and therefore optimizes the encapsulation of the whole electrical drive unit.

The liquid-cooled modules are designed for 6- or 12-pulse supply as standard.

Low Harmonic/Regen drive

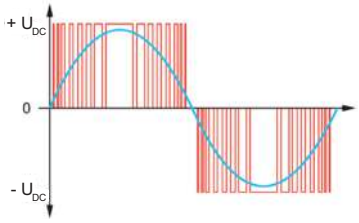

2-level technology

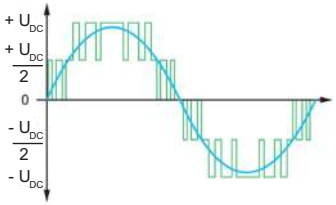

3-level technology

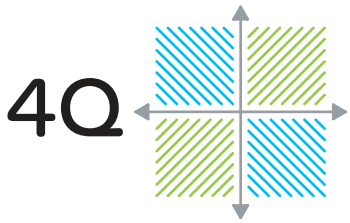

4-quadrant technology

Braking unit module

Product features (continued)

Low Harmonic/Regen drives

Low Harmonic/Regenerative drives are used when drives need to generate particularly low harmonics on the mains.

In addition, Low Harmonic/Regen drives are capable of feeding energy back to the mains, enabling a 4Q operation and improving overall application efficiency.

In comparison with commonly-used 2-level AFE (active front end) architectures, the 3-level technology of Altivar Process Modular Low Harmonic/Regen drives allows this new technology to reach a total distortion factor (THDi) of around 2% and thus fulfills the requirements of standard IEEE 519 for a THDi < 5% in case of distorted mains. Additionally, the cos Phi ≈ 1 in each load situation (from 30 % Pn) helps to reduce the line supply load.

The Low Harmonic/Regen drives range is an optimum solution for energy efficiency and process optimization.

Device features

Enhanced motor service life due to the 3-level concept

The 3-level AIC (active infeed converter) technology reduces the voltage load at the motor significantly, compared with other low harmonic frequency inverters. The fluctuating adaptation of the DC link voltage helps to extend the motor service life.

Reduced losses due to the 3-level concept

In comparison with the traditional circuit structure of active mains rectifiers, the switching frequency is increased and the current load is reduced at the same time when using 3-level technology.

Compact dimensions due to the 3-level concept

A significant advantage of the 3-level technology is the reduced size of the integrated filter. Due to the increased switching frequency and its location inside the forced cooling air channel, the dimensions of the filter can be almost halved.

Braking units

Same integration process as standard power module

Braking units and standard power modules have the same frame and size. They use the same integration kits and DC bus bar kits.

Compliant with standard and LH/Regen drives

Braking units can be built for both standard APM drives and Low Harmonic/Regen APM drives (up to three power modules architectures).

Compliant with any APM integration type

- ■ Standard integration in 2 m/*6.56 ft* high cabinets
- ■ IP21/UL Type 1 with a common cooling air flow
- ■ IP54/UL Type 12 with a separate cooling air flow

Advanced functions

- ■ With Standard drives:
- □ Full braking torque also in overload range
- □ Shortening and monitoring the deceleration time, for long travel applications, for example
- □ Temporary regenerative load, such as for hoist applications
- ■ With LH/Regen drives:
- □ Braking operation when energy regeneration is not possible

Variable speed drives

Altivar Process ATV900

Drives for integration

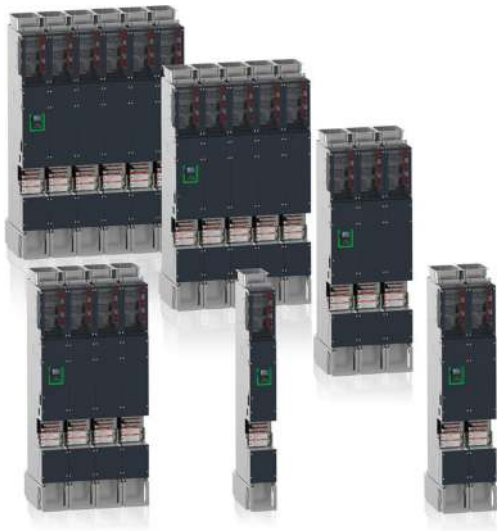

Altivar Process Modular Standard architecture from 1 to 6 modules

Altivar Process Modular Low Harmonic/Regen architecture from 1 to 6 modules

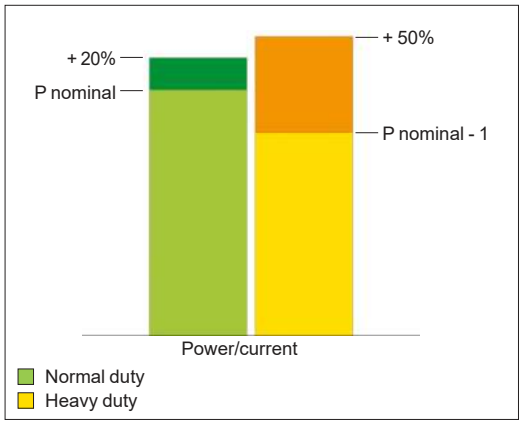

Normal duty and Heavy duty modes

Drive products for integration

Drive products for integration can be used for optimizing space when integrated inside cabinets. They cover motor power ratings from 0.75…90 kW/*1…125 HP* for 380…480 V three-phase voltages.

Three-phase power supply - 380…480 V (-15…10%)		
Motor power	**Degree of protection**	**Reference**
0.75…22 kW *1…30 HP*	IP20	**ATV930U07N4Z…D22N4Z**
30…90 kW *40…120 HP*	IP20	**ATV930D30N4Z…D90N4Z**

Modular drives, based on APM (Altivar Process Modular)

Modular drives solutions can be built using power modules, control units, and accessories. They cover motor power ratings from 75…2600 kW/*125…2600 HP* for 380…690 V three-phase voltages.

The APM drive references given in this catalog are representative of the operational drives that can be built with the APM offer. These operational drives must be integrated in a cabinet through an APM partner or through the integration services from Schneider Electric. Please contact your local Schneider Electric representative for more information on the local APM network and/or to get a quotation for an integrated APM drive.

Three-phase power supply - 380…480 V (-15…10%) Standard		
Motor power	**Degree of protection**	**Reference**
110…1000 kW *150…1400 HP*	IP00	**ATV9A0C11Q4…M10Q4** **ATV9A0C11R4…M10R4** **ATV9A0C11T4…M10T4**

Three-phase power supply - 500 (-10…15%), 600...690 V (-15…10%) Standard		
Motor power	**Degree of protection**	**Reference**
75…1,200 kW *125…1200 HP*	IP00	**ATV9A0C11N6…M12N6** **ATV9A0C11T6…M12T6** **ATV9A0C11Q6…M12Q6**

Three-phase power supply - 380…440 V (-15…10%), 480 V (-10…10%) Low Harmonic/Regen		
Motor power	**Degree of protection**	**Reference**
110…1000 kW *150…1400 HP*	IP00	**ATV9B0C11Q4…M10Q4** **ATV9B0C11R4…M10R4** **ATV9B0C11T4…M10T4**

Three-phase power supply - 500 (-10…15%), 600...690 V (-10…10%) Low Harmonic/Regen		
Motor power	**Degree of protection**	**Reference**
75…1200 kW *125…1200 HP*	IP00	**ATV9B0C11N6…M12N6** **ATV9B0C11T6…M12T6** **ATV9B0C11Q6…M12Q6**

Modular drives, based on APM-L (APM Liquid-cooled)

Three-phase power supply - 380 V…480 V(-15…10%) Standard		
Motor power	**Degree of protection**	**Reference**
132…1800 kW *200…2500 HP*	**IP00**	**ATV9L0C13Q4…M18Q4** **ATV9L0C13R4…M18R4** **ATV9L0C13T4…M18T4**

Three-phase power supply - 500 (-10…15%), 600...690 V (-15…10%) Standard		
Motor power	**Degree of protection**	**Reference**
132…2600 kW *200…2600 HP*	**IP00**	**ATV9L0C20N6…M26N6** **ATV9L0C20T6…M26T6** **ATV9L0C20Q6…M26Q6**

Altivar Process Modular variable speed drives are designed for use in two operating modes that can optimize the drive nominal rating according to the system constraints:

- Normal duty (ND): Dedicated mode for applications requiring a slight overload up to 120% with a motor power no higher than the drive nominal power
- Heavy duty (HD): Dedicated mode for applications requiring a significant overload up to 150% with a motor power no higher than the drive nominal power derated by one rating

Variable speed drives

Altivar Process ATV900

Drive products for integration

Three-phase supply voltage: 380…480 V 50/60 Hz

ATVPro_62317_CPMGU18011

ATV930U75N4Z

380…480 V (-15...10%) 50/60 Hz drive products for cabinet integration

Motor			Line supply				Drive			
Power indicated on rating plate (1)			Line current (2)		Apparent power	Prospective line Isc	Maximum continuous current (1)	Maximum transient current for 60 s	Reference (5)	Weight kg/ lb
			380 V	480 V	380 V					
ND:	Normal duty (3)									
HD:	Heavy duty (4)									
	kW	HP	A	A	kVA	kA	A	A		
With category C2 or C3 integrated EMC filter										
IP20 drives										
ND	0.75	1	1.5	1.3	1.1	50	2.2	2.6	ATV930U07N4Z	–
HD	0.37	0.5	0.9	0.8	0.7	50	1.5	2.3		
ND	1.5	2	3	2.6	2.2	50	4	4.8	ATV930U15N4Z	–
HD	0.75	1	1.7	1.5	1.2	50	2.2	3.3		
ND	2.2	3	4.3	3.8	3.2	50	5.6	6.7	ATV930U22N4Z	–
HD	1.5	2	3.1	2.9	2.4	50	4	6		
ND	3	–	5.8	5.1	4.2	50	7.2	8.6	ATV930U30N4Z	–
HD	2.2	3	4.5	4	3.3	50	5.6	8.4		
ND	4	5	7.6	6.7	5.6	50	9.3	11.2	ATV930U40N4Z	–
HD	3	–	6	5.4	4.5	50	7.2	10.8		
ND	5.5	7.5	10.4	9.1	7.6	50	12.7	15.2	ATV930U55N4Z	–
HD	4	5	8	7.2	6.0	50	9.3	14		
ND	7.5	10	13.8	11.9	9.9	50	16.5	19.8	ATV930U75N4Z	–
HD	5.5	7.5	10.5	9.2	7.6	50	12.7	19.1		
ND	11	15	19.8	17	14.1	50	23.5	28.2	ATV930D11N4Z	–
HD	7.5	10	14.1	12.5	10.4	50	16.5	24.8		
ND	15	20	27	23.3	19.4	50	31.7	38	ATV930D15N4Z	–
HD	11	15	20.6	18.1	15	50	23.5	35.3		
ND	18.5	25	33.4	28.9	24	50	39.2	47	ATV930D18N4Z	–
HD	15	20	27.7	24.4	20.3	50	31.7	47.6		
ND	22	30	39.6	34.4	28.6	50	46.3	55.6	ATV930D22N4Z	–
HD	18.5	25	34.1	29.9	24.9	50	39.2	58.8		

*(1) These values are given for use in continuous operation with a nominal switching frequency of 4 kHz (**ATV930U07N4Z...D45N4Z**).*
*The switching frequency is adjustable from 2…12 kHz (**ATV930U07N4Z...D45N4Z**).*
Above the nominal switching frequency, the drive will automatically reduce the switching frequency in the event of an excessive temperature rise.
For continuous operation above the nominal switching frequency, nominal drive current should be derated according to the derating curves available in the Installation Manual.
(2) Typical value for the indicated motor power and for the maximum prospective line Isc.
(3) Values given for applications requiring a slight overload (up to 120%).
(4) Values given for applications requiring a significant overload (up to 150%).
*(5) For applications requiring Type 12 ready-to-use, add "U" at the end of the reference (**ATV●●●N4ZU**).*

Variable speed drives

Altivar Process ATV900

Drive products for integration

Three-phase supply voltage: 380…480 V 50/60 Hz

ATV930D30N4Z

380…480 V (-15...10%) 50/60 Hz drive products for cabinet integration

Motor			Line supply				Drive			
Power indicated on rating plate (1)			Line current (2)		Apparent power	Prospective line Isc	Maximum continuous current (1)	Maximum transient current for 60 s	Reference (6)	Weight kg/ lb
			380 V	480 V	380 V					
ND:	Normal duty (3)									
HD:	Heavy duty (4)									
	kW	HP	A	A	kVA	kA	A	A		
With category C2 or C3 integrated EMC filter										
IP20 drives (5)										
ND	30	40	53.3	45.9	38.2	50	61.5	73.8	ATV930D30N4Z	–
HD	22	30	40.5	35.8	29.8	50	46.3	69.5		
ND	37	50	66.2	57.3	47.6	50	74.5	89.4	ATV930D37N4Z	–
HD	30	40	54.8	48.3	40.2	50	61.5	92.3		
ND	45	60	79.8	69.1	57.4	50	88	105.6	ATV930D45N4Z	–
HD	37	50	67.1	59	49.1	50	74.5	111.8		
ND	55	75	97.2	84.2	70	50	106	127.2	ATV930D55N4Z	–
HD	45	60	81.4	71.8	59.7	50	88	132		
ND	75	100	131.3	112.7	93.7	50	145	174	ATV930D75N4Z	–
HD	55	75	98.9	86.9	72.2	50	106	159		
ND	90	125	156.2	135.8	112.9	50	173	207.6	ATV930D90N4Z	–
HD	75	100	134.3	118.1	98.2	50	145	217.5		

EMC plates for ATV930●●●N4Z

Corresponding drive	Plate reference	Weight kg/ lb
ATV930U07N4Z...U55N4Z	VW3A47801	–
ATV930U75N4Z...D11N4Z	VW3A47802	–
ATV930D15N4Z...D22N4Z	VW3A47803	–
ATV930D30N4Z..D37N4Z	VW3A47804	–
ATV930D55N4Z...D90N4Z	VW3A47805	–

*(1) These values are given for use in continuous operation with a nominal switching frequency of 4 kHz (**ATV930U07N4Z...D45N4Z**).*
*The switching frequency is adjustable from 2…12 kHz (**ATV930U07N4Z...D45N4Z**).*
Above the nominal switching frequency, the drive will automatically reduce the switching frequency in the event of an excessive temperature rise.
For continuous operation above the nominal switching frequency, nominal drive current should be derated according to the derating curves available in the Installation Manual.
(2) Typical value for the indicated motor power and for the maximum prospective line Isc.
(3) Values given for applications requiring a slight overload (up to 120%).
(4) Values given for applications requiring a significant overload (up to 150%).
(5) These drives are IP00 at the bottom terminals for power connection.
*(6) For applications requiring Type 12 ready-to-use, add "U" at the end of the reference (**ATV●●●N4ZU**).*

Variable speed drives

Altivar Process ATV900

Modular drives

Three-phase supply voltage: 400 V 50/60 Hz

ATVM_CP19044

ATV9A0C16Q4

ATVM_CP19049

ATV9A0C20Q4

3

400 V (-15...10%) IP00 Standard Modular drives *(1)*

Motor			Line supply			Altivar Process		
Power indicated on rating plate *(2)*			Line current *(3)*	Apparent power	Maximum prospective line Isc	Maximum continuous current *(2)*	Max. transient current for 60 s	Reference *(4)*
			400 V	400 V				
ND:	Normal duty							
HD:	*Heavy duty*							
	kW	*HP*	A	kVA	kA	A	A	
Altivar Process Modular for demanding applications								
THDi ≤ 48% at 100% load in Normal duty								
ND	110	–	198	135	50	211	253	ATV9A0C11Q4
HD	*90*	*–*	*167*	*114*	*50*	*173*	*260*	
ND	132	–	233	161	50	250	300	ATV9A0C13Q4
HD	*110*	*–*	*198*	*136*	*50*	*211*	*317*	
ND	160	–	278	192	50	302	362	ATV9A0C16Q4
HD	*132*	*–*	*233*	*161*	*50*	*250*	*375*	
ND	200	–	352	242	50	370	444	ATV9A0C20Q4
HD	*160*	*–*	*290*	*198*	*50*	*302*	*453*	
ND	250	–	432	299	50	477	572	ATV9A0C25Q4
HD	*200*	*–*	*353*	*245*	*50*	*370*	*555*	
ND	315	–	538	373	50	590	708	ATV9A0C31Q4
HD	*250*	*–*	*432*	*299*	*50*	*477*	*716*	
ND	355	–	611	423	50	660	792	ATV9A0C35Q4
HD	*280*	*–*	*489*	*339*	*50*	*520*	*780*	
ND	400	–	681	472	50	730	876	ATV9A0C40Q4
HD	*315*	*–*	*545*	*378*	*50*	*590*	*885*	
ND	450	–	764	529	50	830	996	ATV9A0C45Q4
HD	*355*	*–*	*611*	*423*	*50*	*660*	*990*	
ND	500	–	846	586	50	900	1,080	ATV9A0C50Q4
HD	*400*	*–*	*681*	*472*	*50*	*730*	*1,095*	
ND	560	–	948	657	50	1,020	1,224	ATV9A0C56Q4
HD	*450*	*–*	*767*	*531*	*50*	*830*	*1,245*	
ND	630	–	1,058	733	50	1,140	1,368	ATV9A0C63Q4
HD	*500*	*–*	*849*	*588*	*50*	*900*	*1,350*	
ND	710	–	1,192	826	50	1,260	1,512	ATV9A0C71Q4
HD	*560*	*–*	*951*	*659*	*50*	*1,020*	*1,530*	
ND	800	–	1,335	925	50	1,420	1,704	ATV9A0C80Q4
HD	*630*	*–*	*1,061*	*735*	*50*	*1,140*	*1,710*	
ND	1000	–	1,692	1172	50	1,770	1,947	ATV9A0M10Q4
HD	*800*	*–*	*1,362*	*944*	*50*	*1,420*	*2,130*	

(1) Integrated motor chokes allowing a shielded motor cable length up to 300 m/984 ft in category C3.
(2) These values are given for a nominal switching frequency of 2.5 kHz for use in continuous operation.
The switching frequency is adjustable from 2 to 4.9 kHz for all ratings.
Above 2.5 kHz, the drive will automatically reduce the switching frequency in the event of an excessive temperature rise.
For continuous operation above the nominal switching frequency, derate the nominal drive current. Contact your APM partner for more information.
(3) Typical value for the indicated motor power and for the maximum prospective line Isc.
(4) These references are built by combining sub-assemblies and accessories that are integrated by Altivar Process Modular Program members. Contact your APM partner for more information on possible single drive architectures.

***Note:** Altivar Process Modular Standard drives can be designed as Reduced Height versions for integration in cabinets with a height of 1.6 m/5.25 ft. Contact your APM partner for more information.*

Variable speed drives

Altivar Process ATV900

Modular drives

Three-phase supply voltage: 440 V 50/60 Hz

ATVM_CP19049

ATV9A0C31R4

ATVM_CP19050

ATV9A0C40R4

440 V (-15...10%) IP00 Standard Modular drives (1)								
Motor			Line supply			Altivar Process		
Power indicated on rating plate (2)			Line current (3)	Apparent power	Maximum prospective line Isc	Maximum continuous current (2)	Max. transient current for 60 s	Reference (4)
			440 V	440 V				
ND:	Normal duty							
HD:	*Heavy duty*							
	kW	*HP*	A	kVA	kA	A	A	
Altivar Process Modular for demanding applications								
THDi ≤ 48% at 100% load in Normal duty								
ND	110	–	183	136	50	211	253	ATV9A0C11R4
HD	*90*	*–*	*155*	*115*	*50*	*173*	*260*	
ND	132	–	214	162	50	250	300	ATV9A0C13R4
HD	*110*	*–*	*183*	*138*	*50*	*211*	*317*	
ND	160	–	255	194	50	302	362	ATV9A0C16R4
HD	*132*	*–*	*214*	*162*	*50*	*250*	*375*	
ND	160	–	325	245	50	370	444	ATV9A0C20R4
HD	*160*	*–*	*269*	*201*	*50*	*302*	*453*	
ND	250	–	396	302	50	477	572	ATV9A0C25R4
HD	*200*	*–*	*325*	*248*	*50*	*370*	*555*	
ND	315	–	493	376	50	590	708	ATV9A0C31R4
HD	*250*	*–*	*396*	*302*	*50*	*477*	*716*	
ND	355	–	559	426	50	660	792	ATV9A0C35R4
HD	*280*	*–*	*450*	*343*	*50*	*520*	*780*	
ND	400	–	623	475	50	730	876	ATV9A0C40R4
HD	*315*	*–*	*501*	*382*	*50*	*590*	*885*	
ND	450	–	697	531	50	830	996	ATV9A0C45R4
HD	*355*	*–*	*559*	*426*	*50*	*660*	*990*	
ND	500	–	771	588	50	900	1,080	ATV9A0C50R4
HD	*400*	*–*	*623*	*475*	*50*	*730*	*1,095*	
ND	560	–	865	659	50	1,020	1,224	ATV9A0C56R4
HD	*450*	*–*	*703*	*536*	*50*	*830*	*1,245*	
ND	630	–	965	735	50	1,140	1,368	ATV9A0C63R4
HD	*500*	*–*	*776*	*591*	*50*	*900*	*1,350*	
ND	710	–	1,087	828	50	1,260	1,512	ATV9A0C71R4
HD	*580*	*–*	*869*	*662*	*50*	*1,020*	*1,530*	
ND	800	–	1,216	927	50	1,420	1,704	ATV9A0C80R4
HD	*630*	*–*	*968*	*738*	*50*	*1,140*	*1,710*	
ND	1000	–	1,542	1175	50	1,770	1,947	ATV9A0M10R4
HD	*800*	*–*	*1,246*	*950*	*50*	*1,420*	*2,130*	

(1) Integrated motor chokes allowing a shielded motor cable length up to 300 m/984 ft in category C3.
(2) These values are given for a nominal switching frequency of 2.5 kHz for use in continuous operation.
The switching frequency is adjustable from 2 to 4.9 kHz for all ratings.
Above 2.5 kHz, the drive will automatically reduce the switching frequency in the event of an excessive temperature rise.
For continuous operation above the nominal switching frequency, derate the nominal drive current. Contact your APM partner for more information.
(3) Typical value for the indicated motor power and for the maximum prospective line Isc.
(4) These references are built by combining sub-assemblies and accessories that are integrated by Altivar Process Modular Program members. Contact your APM partner for more information on possible single drive architectures.

***Note:** Altivar Process Modular Standard drives can be designed as Reduced Height versions for integration in cabinets with a height of 1.6 m/5.25 ft. Contact your APM partner for more information.*

Variable speed drives

Altivar Process ATV900

Modular drives

Three-phase supply voltage: 480 V 50/60 Hz

ATVM_OP19051

ATV9A0C63T4

ATVM_OP19052

ATV9A0C80T4

3

480 V (-15...10%) IP00 Standard Modular drives *(1)*								
Motor			**Line supply**			**Altivar Process**		
Power indicated on rating plate *(2)*			**Line current** *(3)*	**Apparent power**	**Maximum prospective line Isc**	**Maximum continuous current** *(2)*	**Max. transient current for 60 s**	**Reference** *(4)*
			480 V	**480 V**				
ND:	**Normal duty**							
HD:	***Heavy duty***							
	kW	***HP***	**A**	**kVA**	**kA**	**A**	**A**	
Altivar Process Modular for demanding applications								
THDi ≤ 48% at 100% load in Normal duty								
ND	–	*150*	168	138	50	211	253	**ATV9A0C11T4**
HD	–	*125*	*145*	*118*	*50*	*173*	*260*	
ND	–	*200*	218	180	50	250	300	**ATV9A0C13T4**
HD	–	*150*	*168*	*140*	*50*	*211*	*317*	
ND	–	*250*	268	223	50	302	362	**ATV9A0C16T4**
HD	–	*200*	*218*	*180*	*50*	*250*	*375*	
ND	–	*300*	328	271	50	370	444	**ATV9A0C20T4**
HD	–	*250*	*280*	*230*	*50*	*302*	*453*	
ND	–	*400*	427	355	50	477	572	**ATV9A0C25T4**
HD	–	*300*	*328*	*273*	*50*	*370*	*555*	
ND	–	*500*	528	439	50	590	708	**ATV9A0C31T4**
HD	–	*400*	*427*	*355*	*50*	*477*	*716*	
ND	–	*550*	586	487	50	660	792	**ATV9A0C35T4**
HD	–	*450*	*486*	*404*	*50*	*520*	*780*	
ND	–	*600*	634	527	50	730	876	**ATV9A0C40T4**
HD	–	*500*	*536*	*446*	*50*	*590*	*885*	
ND	–	*650*	685	569	50	830	996	**ATV9A0C45T4**
HD	–	*550*	*586*	*487*	*50*	*660*	*990*	
ND	–	*700*	736	612	50	900	1,080	**ATV9A0C50T4**
HD	–	*600*	*634*	*527*	*50*	*730*	*1,095*	
ND	–	*800*	842	700	50	1,020	1,224	**ATV9A0C56T4**
HD	–	*650*	*690*	*574*	*50*	*830*	*1,245*	
ND	–	*900*	939	781	50	1,140	1,368	**ATV9A0C63T4**
HD	–	*700*	*740*	*615*	*50*	*900*	*1,350*	
ND	–	*1,000*	1,044	868	50	1,260	1,512	**ATV9A0C71T4**
HD	–	*800*	*846*	*703*	*50*	*1,020*	*1,530*	
ND	–	*1,100*	1,146	953	50	1,420	1,704	**ATV9A0C80T4**
HD	–	*900*	*942*	*783*	*50*	*1,140*	*1,710*	
ND	–	*1,400*	1,472	1224	50	1,770	1,947	**ATV9A0M10T4**
HD	–	*1,100*	*1,268*	*1054*	*50*	*1,420*	*2,130*	

(1) Integrated motor chokes allowing a shielded motor cable length up to 300 m/984 ft in category C3.
(2) These values are given for a nominal switching frequency of 2.5 kHz for use in continuous operation.
The switching frequency is adjustable from 2 to 4.9 kHz for all ratings.
Above 2.5 kHz, the drive will automatically reduce the switching frequency in the event of an excessive temperature rise.
For continuous operation above the nominal switching frequency, derate the nominal drive current. Contact your APM partner for more information.
(3) Typical value for the indicated motor power and for the maximum prospective line Isc.
(4) These references are built by combining sub-assemblies and accessories that are integrated by Altivar Process Modular Program members. Contact your APM partner for more information on possible single drive architectures.

***Note:** Altivar Process Modular Standard drives can be designed as Reduced Height versions for integration in cabinets with a height of 1.6 m/5.25 ft. Contact your APM partner for more information.*

Variable speed drives

Altivar Process ATV900

Modular drives

Three-phase supply voltage: 500 V 50/60 Hz

ATVM_CP19044

ATV9A0C11N6

ATVM_CP19049

ATV9A0C25N6

500 V (-10...15%) IP00 Standard Modular drives (1)								
Motor			Line supply			Altivar Process		
Power indicated on rating plate (2)			Line current (3)	Apparent power	Maximum prospective line Isc	Maximum continuous current (2)	Max. transient current for 60 s	Reference (4)
			500 V	500 V				
ND:	Normal duty							
HD:	Heavy duty							
	kW	HP	A	kVA	kA	A	A	
Altivar Process Modular for demanding applications								
THDi ≤ 48% at 100% load in Normal duty								
ND	75	–	110	95	50	125	150	ATV9A0C11N6
HD	55	–	83	72	50	105	158	
ND	90	–	129	112	50	145	174	ATV9A0C13N6
HD	75	–	110	95	50	125	188	
ND	110	–	154	133	50	175	210	ATV9A0C16N6
HD	90	–	129	112	50	145	218	
ND	132	–	183	158	50	215	258	ATV9A0C20N6
HD	110	–	154	133	50	175	263	
ND	160	–	225	195	50	275	330	ATV9A0C25N6
HD	132	–	190	165	50	215	323	
ND	220	–	303	262	50	340	408	ATV9A0C31N6
HD	160	–	225	195	50	275	413	
ND	280	–	380	329	50	425	510	ATV9A0C40N6
HD	220	–	303	262	50	340	510	
ND	355	–	484	419	50	520	624	ATV9A0C50N6
HD	280	–	385	333	50	425	638	
ND	450	–	607	526	50	650	780	ATV9A0C63N6
HD	355	–	484	419	50	520	780	
ND	560	–	756	655	50	830	996	ATV9A0C80N6
HD	450	–	610	528	50	650	975	
ND	710	–	954	826	50	1,030	1,236	ATV9A0M10N6
HD	560	–	758	656	50	830	1,245	
ND	800	–	1,070	927	50	1,230	1,476	ATV9A0M12N6
HD	710	–	954	826	50	1,030	1,545	

(1) Integrated motor chokes allowing a shielded motor cable length up to 300 m/984 ft in category C3.
(2) These values are given for a nominal switching frequency of 2.5 kHz for use in continuous operation.
The switching frequency is adjustable from 2 to 4.9 kHz for all ratings.
Above 2.5 kHz, the drive will automatically reduce the switching frequency in the event of an excessive temperature rise.
For continuous operation above the nominal switching frequency, derate the nominal drive current. Contact your APM partner for more information.
(3) Typical value for the indicated motor power and for the maximum prospective line Isc.
(4) These references are built by combining sub-assemblies and accessories that are integrated by Altivar Process Modular Program members. Contact your APM partner for more information on possible single drive architectures.

***Note:** Altivar Process Modular Standard drives can be designed as Reduced Height versions for integration in cabinets with a height of 1.6 m/5.25 ft. Contact your APM partner for more information.*

Variable speed drives

Altivar Process ATV900

Modular drives

Three-phase supply voltage: 600 V 50/60 Hz

ATVM_OP19050

ATV9A0C50T6

ATVM_OP19051

ATV9A0C80T6

600 V (-15...10%) IP00 Standard Modular drives *(1)*

Motor			Line supply			Altivar Process		
Power indicated on rating plate *(2)*			Line current *(3)*	Apparent power	Maximum prospective line Isc	Maximum continuous current *(2)*	Max. transient current for 60 s	Reference *(4)*
			600 V	600 V				
ND:	Normal duty							
HD:	*Heavy duty*							
	kW	*HP*	A	kVA	kA	A	A	
Altivar Process Modular for demanding applications								
THDi ≤ 48% at 100% load in Normal duty								
ND	–	*125*	112	116	50	125	150	**ATV9A0C11T6**
HD	–	*100*	*92*	*96*	*50*	*105*	*158*	
ND	–	*150*	131	136	50	145	174	**ATV9A0C13T6**
HD	–	*125*	*112*	*116*	*50*	*125*	*188*	
ND	–	*175*	152	158	50	175	210	**ATV9A0C16T6**
HD	–	*150*	*131*	*136*	*50*	*145*	*218*	
ND	–	*200*	172	179	50	215	258	**ATV9A0C20T6**
HD	–	*175*	*152*	*158*	*50*	*175*	*263*	
ND	–	*250*	218	227	50	275	330	**ATV9A0C25T6**
HD	–	*200*	*179*	*186*	*50*	*215*	*323*	
ND	–	*350*	298	310	50	340	408	**ATV9A0C31T6**
HD	–	*250*	*218*	*227*	*50*	*275*	*413*	
ND	–	*450*	379	394	50	425	510	**ATV9A0C40T6**
HD	–	*350*	*298*	*310*	*50*	*340*	*510*	
ND	–	*550*	464	482	50	520	624	**ATV9A0C50T6**
HD	–	*450*	*383*	*398*	*50*	*425*	*638*	
ND	–	*650*	544	565	50	650	780	**ATV9A0C63T6**
HD	–	*550*	*464*	*482*	*50*	*520*	*780*	
ND	–	*800*	670	696	50	830	996	**ATV9A0C80T6**
HD	–	*650*	*547*	*568*	*50*	*650*	*975*	
ND	–	*1000*	833	866	50	1,030	1,236	**ATV9A0M10T6**
HD	–	*800*	*673*	*699*	*50*	*830*	*1,245*	
ND	–	*1200*	994	1,033	50	1,230	1,476	**ATV9A0M12T6**
HD	–	*1000*	*835*	*835*	*50*	*1,030*	*1,545*	

(1) Integrated motor chokes allowing a shielded motor cable length up to 300 m/984 ft in category C3.
(2) These values are given for a nominal switching frequency of 2.5 kHz for use in continuous operation.
The switching frequency is adjustable from 2 to 4.9 kHz for all ratings.
Above 2.5 kHz, the drive will automatically reduce the switching frequency in the event of an excessive temperature rise.
For continuous operation above the nominal switching frequency, derate the nominal drive current. Contact your APM partner for more information.
(3) Typical value for the indicated motor power and for the maximum prospective line Isc.
(4) These references are built by combining sub-assemblies and accessories that are integrated by Altivar Process Modular Program members. Contact your APM partner for more information on possible single drive architectures.

***Note:** Altivar Process Modular Standard drives can be designed as Reduced Height versions for integration in cabinets with a height of 1.6 m/5.25 ft. Contact your APM partner for more information.*

Variable speed drives

Altivar Process ATV900

Modular drives

Three-phase supply voltage: 690 V 50/60 Hz

ATVM_OP19052

ATV9A0M10Q6

ATVM_OP19053

ATV9A0M12Q6

690 V (-15...10%) IP00 Standard Modular drives *(1)*

Motor			Line supply			Altivar Process		
Power indicated on rating plate *(2)*			Line current *(3)*	Apparent power	Maximum prospective line Isc	Maximum continuous current *(2)*	Max. transient current for 60 s	Reference *(4)*
			690 V	690 V				
ND:	Normal duty							
HD:	*Heavy duty*							
	kW	*HP*	A	kVA	kA	A	A	
Altivar Process Modular for demanding applications								
THDi ≤ 48% at 100% load in Normal duty								
ND	*110*	–	118	141	50	125	150	ATV9A0C11Q6
HD	*90*	–	*100*	*120*	*50*	*105*	*158*	
ND	*132*	–	138	165	50	145	174	ATV9A0C13Q6
HD	*110*	–	*118*	*141*	*50*	*125*	*188*	
ND	*160*	–	163	195	50	175	210	ATV9A0C16Q6
HD	*132*	–	*138*	*165*	*50*	*145*	*218*	
ND	*200*	–	200	239	50	215	258	ATV9A0C20Q6
HD	*160*	–	*163*	*195*	*50*	*175*	*263*	
ND	*250*	–	255	305	50	275	330	ATV9A0C25Q6
HD	*200*	–	*211*	*252*	*50*	*215*	*323*	
ND	*315*	–	316	378	50	340	408	ATV9A0C31Q6
HD	*250*	–	*255*	*305*	*50*	*275*	*413*	
ND	*400*	–	394	471	50	425	510	ATV9A0C40Q6
HD	*315*	–	*316*	*378*	*50*	*340*	*510*	
ND	*500*	–	495	592	50	520	624	ATV9A0C50Q6
HD	*400*	–	*401*	*479*	*50*	*425*	*638*	
ND	*630*	–	615	735	50	650	780	ATV9A0C63Q6
HD	*500*	–	*495*	*592*	*50*	*520*	*780*	
ND	*800*	–	776	927	50	830	996	ATV9A0C80Q6
HD	*630*	–	*619*	*740*	*50*	*650*	*975*	
ND	*1,000*	–	969	1,158	50	1,030	1,236	ATV9A0M10Q6
HD	*800*	–	*779*	*931*	*50*	*830*	*1,245*	
ND	*1,200*	–	1,161	1,388	50	1,230	1,476	ATV9A0M12Q6
HD	*1,000*	–	*971*	*1,160*	*50*	*1,030*	*1,545*	

(1) Integrated motor chokes allowing a shielded motor cable length up to 300 m/984 ft in category C3.
(2) These values are given for a nominal switching frequency of 2.5 kHz for use in continuous operation.
The switching frequency is adjustable from 2 to 4.9 kHz for all ratings.
Above 2.5 kHz, the drive will automatically reduce the switching frequency in the event of an excessive temperature rise.
For continuous operation above the nominal switching frequency, derate the nominal drive current. Contact your APM partner for more information.
(3) Typical value for the indicated motor power and for the maximum prospective line Isc.
(4) These references are built by combining sub-assemblies and accessories that are integrated by Altivar Process Modular Program members. Contact your APM partner for more information on possible single drive architectures.

***Note:** Altivar Process Modular Standard drives can be designed as Reduced Height versions for integration in cabinets with a height of 1.6 m/5.25 ft. Contact your APM partner for more information.*

Variable speed drives

Altivar Process ATV900

Modular Low Harmonic/Regen drives

Three-phase supply voltage: 400 V 50/60 Hz

ATVPro_62317_CPMGU180016

ATV9B0C13Q4

ATVPro_CP19025

ATV9B0C25Q4

400 V (-15…10%) IP00 Modular Low Harmonic/Regen drives (1)								
Motor			Line supply			Altivar Process		
Power indicated on rating plate (2)			Line current (3)	Apparent power	Maximum prospective line Isc	Maximum continuous current (2)	Max. transient current for 60 s	Reference (4)
			400 V	400 V				
ND:	Normal duty							
HD:	Heavy duty							
	kW	HP	A	kVA	kA	A	A	
Altivar Process Modular for demanding applications								
THDi ≤ 5% at 100% load in Normal duty								
ND	110	–	175	121	50	211	253	ATV9B0C11Q4
HD	*90*	*–*	*144*	*100*	*50*	*173*	*260*	
ND	132	–	208	144	50	250	300	ATV9B0C13Q4
HD	*110*	*–*	*174*	*121*	*50*	*211*	*317*	
ND	160	–	252	174	50	302	362	ATV9B0C16Q4
HD	*132*	*–*	*208*	*144*	*50*	*250*	*375*	
ND	200	–	313	217	50	370	444	ATV9B0C20Q4
HD	*160*	*–*	*252*	*174*	*50*	*302*	*453*	
ND	250	–	389	270	50	477	572	ATV9B0C25Q4
HD	*200*	*–*	*313*	*217*	*50*	*370*	*555*	
ND	315	–	491	340	50	590	708	ATV9B0C31Q4
HD	*250*	*–*	*389*	*270*	*50*	*477*	*716*	
ND	355	–	553	383	50	660	792	ATV9B0C35Q4
HD	*280*	*–*	*436*	*302*	*50*	*520*	*780*	
ND	400	–	620	429	50	730	876	ATV9B0C40Q4
HD	*315*	*–*	*491*	*340*	*50*	*590*	*885*	
ND	450	–	697	483	50	830	996	ATV9B0C45Q4
HD	*355*	*–*	*553*	*383*	*50*	*660*	*990*	
ND	500	–	775	537	50	900	1080	ATV9B0C50Q4
HD	*400*	*–*	*620*	*429*	*50*	*730*	*1095*	
ND	560	–	868	601	50	1020	1224	ATV9B0C56Q4
HD	*450*	*–*	*697*	*483*	*50*	*830*	*1245*	
ND	630	–	971	673	50	1140	1368	ATV9B0C63Q4
HD	*500*	*–*	*775*	*537*	*50*	*900*	*1350*	
ND	710	–	1094	758	50	1260	1512	ATV9B0C71Q4
HD	*560*	*–*	*868*	*601*	*50*	*1020*	*1530*	
ND	800	–	1227	850	50	1420	1704	ATV9B0C80Q4
HD	*630*	*–*	*971*	*673*	*50*	*1140*	*1710*	

(1) Integrated motor chokes allowing a shielded motor cable length up to 300 m/984 ft in category C3.

(2) These values are given for a nominal switching frequency of 2.5 kHz for use in continuous operation.
The switching frequency is adjustable from 2 to 4.9 kHz for all ratings.
Above 2.5 kHz, the drive will automatically reduce the switching frequency in the event of an excessive temperature rise.
For continuous operation above the nominal switching frequency, derate the nominal drive current. Contact your APM partner for more information.

(3) Typical value for the indicated motor power and for the maximum prospective line Isc.

(4) These references are built by combining sub-assemblies and accessories that are integrated by Altivar Process Modular Program members. Contact your APM partner for more information on possible single drive architectures.

Variable speed drives

Altivar Process ATV900

Modular Low Harmonic/Regen drives

Three-phase supply voltage: 440 V 50/60 Hz

ATVPro_CP19026

ATV9B0C40R4

ATVPro_CP19027

ATV9B0C63R4

440 V (-15…10%) IP00 Modular Low Harmonic/Regen drives *(1)*

Motor			Line supply			Altivar Process		
Power indicated on rating plate *(2)*			Line current *(3)*	Apparent power	Maximum prospective line Isc	Maximum continuous current *(2)*	Max. transient current for 60 s	Reference *(4)*
			440 V	440 V				
ND:	Normal duty							
HD:	*Heavy duty*							
	kW	*HP*	A	kVA	kA	A	A	
Altivar Process Modular for demanding applications								
THDi ≤ 5% at 100% load in Normal duty								
ND	110	–	159	121	50	211	253	ATV9B0C11R4
HD	*90*	*–*	*132*	*100*	*50*	*173*	*260*	
ND	132	–	190	145	50	250	300	ATV9B0C13R4
HD	*110*	*–*	*159*	*121*	*50*	*211*	*317*	
ND	160	–	229	174	50	302	362	ATV9B0C16R4
HD	*132*	*–*	*190*	*145*	*50*	*250*	*375*	
ND	200	–	285	217	50	370	444	ATV9B0C20R4
HD	*160*	*–*	*229*	*174*	*50*	*302*	*453*	
ND	250	–	354	270	50	477	572	ATV9B0C25R4
HD	*200*	*–*	*285*	*217*	*50*	*370*	*555*	
ND	315	–	446	340	50	590	708	ATV9B0C31R4
HD	*250*	*–*	*354*	*270*	*50*	*477*	*716*	
ND	355	–	503	383	50	660	792	ATV9B0C35R4
HD	*280*	*–*	*396*	*302*	*50*	*520*	*780*	
ND	400	–	563	429	50	730	876	ATV9B0C40R4
HD	*315*	*–*	*446*	*340*	*50*	*590*	*885*	
ND	450	–	634	483	50	830	996	ATV9B0C45R4
HD	*355*	*–*	*503*	*383*	*50*	*660*	*990*	
ND	500	–	704	537	50	900	1080	ATV9B0C50R4
HD	*400*	*–*	*563*	*429*	*50*	*730*	*1095*	
ND	560	–	789	601	50	1020	1224	ATV9B0C56R4
HD	*450*	*–*	*634*	*483*	*50*	*830*	*1245*	
ND	630	–	883	673	50	1140	1368	ATV9B0C63R4
HD	*500*	*–*	*704*	*537*	*50*	*900*	*1350*	
ND	710	–	995	758	50	1260	1512	ATV9B0C71R4
HD	*560*	*–*	*789*	*601*	*50*	*1020*	*1530*	
ND	800	–	1115	850	50	1420	1704	ATV9B0C80R4
HD	*630*	*–*	*883*	*673*	*50*	*1140*	*1710*	

(1) Integrated motor chokes allowing a shielded motor cable length up to 300 m/984 ft in category C3.
(2) These values are given for a nominal switching frequency of 2.5 kHz for use in continuous operation.
The switching frequency is adjustable from 2 to 4.9 kHz for all ratings.
Above 2.5 kHz, the drive will automatically reduce the switching frequency in the event of an excessive temperature rise.
For continuous operation above the nominal switching frequency, derate the nominal drive current. Contact your APM partner for more information.
(3) Typical value for the indicated motor power and for the maximum prospective line Isc.
(4) These references are built by combining sub-assemblies and accessories that are integrated by Altivar Process Modular Program members. Contact your APM partner for more information on possible single drive architectures.

Variable speed drives

Altivar Process ATV900

Modular Low Harmonic/Regen drives

Three-phase supply voltage: 480 V 50/60 Hz

ATVPro_CP19028

ATV9B0C50T4

ATVPro_CP19023

ATV9B0C80T4

480 V (-10…10%) IP00 Modular Low Harmonic/Regen drives *(1)*								
Motor			**Line supply**			**Altivar Process**		
Power indicated on rating plate *(2)*			**Line current** *(3)*	**Apparent power**	**Maximum prospective line Isc**	**Maximum continuous current** *(2)*	**Max. transient current for 60 s**	**Reference** *(4)*
			480 V	**480 V**				
ND:	**Normal duty**							
HD:	***Heavy duty***							
	kW	***HP***	**A**	**kVA**	**kA**	**A**	**A**	
Altivar Process Modular for demanding applications								
THDi ≤ 5% at 100% load in Normal duty								
ND	–	150	148	123	50	211	253	**ATV9B0C11T4**
HD	–	*125*	*125*	*104*	*50*	*173*	*260*	
ND	–	200	197	164	50	250	300	**ATV9B0C13T4**
HD	–	*150*	*148*	*123*	*50*	*211*	*317*	
ND	–	250	245	203	50	302	362	**ATV9B0C16T4**
HD	–	*200*	*197*	*164*	*50*	*250*	*375*	
ND	–	300	292	243	50	370	444	**ATV9B0C20T4**
HD	–	*250*	*245*	*203*	*50*	*302*	*453*	
ND	–	400	387	322	50	477	572	**ATV9B0C25T4**
HD	–	*300*	*292*	*243*	*50*	*370*	*555*	
ND	–	500	484	402	50	590	708	**ATV9B0C31T4**
HD	–	*400*	*387*	*322*	*50*	*477*	*716*	
ND	–	550	533	443	50	660	792	**ATV9B0C35T4**
HD	–	*450*	*436*	*362*	*50*	*520*	*780*	
ND	–	600	578	480	50	730	876	**ATV9B0C40T4**
HD	–	*500*	*484*	*402*	*50*	*590*	*885*	
ND	–	650	626	520	50	830	996	**ATV9B0C45T4**
HD	–	*550*	*533*	*443*	*50*	*660*	*990*	
ND	–	700	674	561	50	900	1080	**ATV9B0C50T4**
HD	–	*600*	*578*	*480*	*50*	*730*	*1095*	
ND	–	800	771	641	50	1020	1224	**ATV9B0C56T4**
HD	–	*650*	*626*	*520*	*50*	*830*	*1245*	
ND	–	900	862	717	50	1140	1368	**ATV9B0C63T4**
HD	–	*700*	*674*	*561*	*50*	*900*	*1350*	
ND	–	1000	958	797	50	1260	1512	**ATV9B0C71T4**
HD	–	*800*	*771*	*641*	*50*	*1020*	*1530*	
ND	–	1100	1049	872	50	1420	1704	**ATV9B0C80T4**
HD	–	*900*	*862*	*717*	*50*	*1140*	*1710*	

(1) Integrated motor chokes allowing a shielded motor cable length up to 300 m/984 ft in category C3.
(2) These values are given for a nominal switching frequency of 2.5 kHz for use in continuous operation. The switching frequency is adjustable from 2 to 4.9 kHz for all ratings. Above 2.5 kHz, the drive will automatically reduce the switching frequency in the event of an excessive temperature rise. For continuous operation above the nominal switching frequency, derate the nominal drive current. Contact your APM partner for more information.
(3) Typical value for the indicated motor power and for the maximum prospective line Isc.
(4) These references are built by combining sub-assemblies and accessories that are integrated by Altivar Process Modular Program members. Contact your APM partner for more information on possible single drive architectures.

Variable speed drives

Altivar Process ATV900

Modular Low Harmonic/Regen drives

Three-phase supply voltage: 500 V 50/60 Hz

ATVPro_62317_CPMGU180016

ATV9B0C11N6

ATVPro_CP19025

ATV9B0C25N6

500 V (-10...15%) IP00 Modular Low Harmonic/Regen drives *(1)*

Motor			Line supply			Altivar Process		
Power indicated on rating plate *(2)*			Line current *(3)*	Apparent power	Maximum prospective line Isc	Maximum continuous current *(2)*	Max. transient current for 60 s	Reference *(4)*
			500 V	500 V				
ND:	Normal duty							
HD:	*Heavy duty*							
	kW	*HP*	A	kVA	kA	A	A	
Altivar Process Modular for demanding applications								
THDi ≤ 5% at 100% load in Normal duty								
ND	75	–	98	85	50	125	150	ATV9B0C11N6
HD	*55*	–	*72*	*62*	*50*	*105*	*158*	
ND	90	–	117	101	50	145	174	ATV9B0C13N6
HD	*75*	–	*98*	*85*	*50*	*125*	*188*	
ND	110	–	141	122	50	175	210	ATV9B0C16N6
HD	*90*	–	*117*	*101*	*50*	*145*	*218*	
ND	132	–	169	146	50	215	258	ATV9B0C20N6
HD	*110*	–	*141*	*122*	*50*	*175*	*263*	
ND	160	–	204	176	50	275	330	ATV9B0C25N6
HD	*132*	–	*169*	*146*	*50*	*215*	*323*	
ND	220	–	278	241	50	340	408	ATV9B0C31N6
HD	*160*	–	*204*	*176*	*50*	*275*	*413*	
ND	280	–	352	305	50	425	510	ATV9B0C40N6
HD	*220*	–	*278*	*241*	*50*	*340*	*510*	
ND	355	–	446	386	50	520	624	ATV9B0C50N6
HD	*280*	–	*352*	*305*	*50*	*425*	*638*	
ND	450	–	562	487	50	650	780	ATV9B0C63N6
HD	*355*	–	*446*	*386*	*50*	*520*	*780*	
ND	560	–	701	607	50	830	996	ATV9B0C80N6
HD	*450*	–	*564*	*488*	*50*	*650*	*975*	
ND	710	–	884	766	50	1030	1236	ATV9B0M10N6
HD	*560*	–	*701*	*607*	*50*	*830*	*1245*	
ND	800	–	991	859	50	1230	1476	ATV9B0M12N6
HD	*710*	–	*884*	*766*	*50*	*1030*	*1545*	

(1) Integrated motor chokes allowing a shielded motor cable length up to 300 m/984 ft in category C3.
(2) These values are given for a nominal switching frequency of 2.5 kHz for use in continuous operation.
The switching frequency is adjustable from 2 to 4.9 kHz for all ratings.
Above 2.5 kHz, the drive will automatically reduce the switching frequency in the event of an excessive temperature rise.
For continuous operation above the nominal switching frequency, derate the nominal drive current. Contact your APM partner for more information.
(3) Typical value for the indicated motor power and for the maximum prospective line Isc.
(4) These references are built by combining sub-assemblies and accessories that are integrated by Altivar Process Modular Program members. Contact your APM partner for more information on possible single drive architectures.

Variable speed drives

Altivar Process ATV900

Modular Low Harmonic/Regen drives

Three-phase supply voltage: 600 V 50/60 Hz

ATVPro_CP19026

ATV9B0C50T6

ATVPro_CP19027

ATV9B0C80T6

600 V (-10...10%) IP00 Modular Low Harmonic/Regen drives (1)								
Motor			Line supply			Altivar Process		
Power indicated on rating plate (2)			Line current (3)	Apparent power	Maximum prospective line Isc	Maximum continuous current (2)	Max. transient current for 60 s	Reference (4)
			600 V	600 V				
ND:	Normal duty							
HD:	Heavy duty							
	kW	HP	A	kVA	kA	A	A	
Altivar Process Modular for demanding applications								
THDi ≤ 5% at 100% load in Normal duty								
ND	–	125	102	106	50	125	150	ATV9B0C11T6
HD	–	100	82	86	50	105	158	
ND	–	150	121	126	50	145	174	ATV9B0C13T6
HD	–	125	102	106	50	125	188	
ND	–	175	142	147	50	175	210	ATV9B0C16T6
HD	–	150	121	126	50	145	218	
ND	–	200	161	167	50	215	258	ATV9B0C20T6
HD	–	175	142	147	50	175	263	
ND	–	250	199	207	50	275	330	ATV9B0C25T6
HD	–	200	160	166	50	215	323	
ND	–	350	277	288	50	340	408	ATV9B0C31T6
HD	–	250	199	207	50	275	413	
ND	–	450	355	369	50	425	510	ATV9B0C40T6
HD	–	350	277	288	50	340	510	
ND	–	550	434	451	50	520	624	ATV9B0C50T6
HD	–	450	355	369	50	425	638	
ND	–	650	511	531	50	650	780	ATV9B0C63T6
HD	–	550	434	451	50	520	780	
ND	–	800	628	652	50	830	996	ATV9B0C80T6
HD	–	650	513	533	50	650	975	
ND	–	1000	785	815	50	1030	1236	ATV9B0M10T6
HD	–	800	628	652	50	830	1245	
ND	–	1200	937	973	50	1230	1476	ATV9B0M12T6
HD	–	1000	785	815	50	1030	1545	

(1) Integrated motor chokes allowing a shielded motor cable length up to 300 m/984 ft in category C3.
(2) These values are given for a nominal switching frequency of 2.5 kHz for use in continuous operation.
The switching frequency is adjustable from 2 to 4.9 kHz for all ratings.
Above 2.5 kHz, the drive will automatically reduce the switching frequency in the event of an excessive temperature rise.
For continuous operation above the nominal switching frequency, derate the nominal drive current. Contact your APM partner for more information.
(3) Typical value for the indicated motor power and for the maximum prospective line Isc.
(4) These references are built by combining sub-assemblies and accessories that are integrated by Altivar Process Modular Program members. Contact your APM partner for more information on possible single drive architectures.

Variable speed drives

Altivar Process ATV900

Modular Low Harmonic/Regen drives

Three-phase supply voltage: 690 V 50/60 Hz

ATVPro_CP19028

ATV9B0M10Q6

ATVPro_CP19023

ATV9B0M12Q6

690 V (-10...10%) IP00 Modular Low Harmonic/Regen drives *(1)*

Motor			Line supply			Altivar Process		
Power indicated on rating plate *(2)*			Line current *(3)*	Apparent power	Maximum prospective line Isc	Maximum continuous current *(2)*	Max. transient current for 60 s	Reference *(4)*
			690 V	690 V				
ND:	Normal duty							
HD:	*Heavy duty*							
	kW	*HP*	A	kVA	kA	A	A	
Altivar Process Modular for demanding applications								
THDi ≤ 5% at 100% load in Normal duty								
ND	110	–	102	122	50	125	150	ATV9B0C11Q6
HD	*90*	*–*	*85*	*101*	*50*	*105*	*158*	
ND	132	–	122	146	50	145	174	ATV9B0C13Q6
HD	*110*	*–*	*102*	*122*	*50*	*125*	*188*	
ND	160	–	148	177	50	175	210	ATV9B0C16Q6
HD	*132*	*–*	*122*	*146*	*50*	*145*	*218*	
ND	200	–	183	219	50	215	258	ATV9B0C20Q6
HD	*160*	*–*	*148*	*177*	*50*	*175*	*263*	
ND	250	–	228	273	50	275	330	ATV9B0C25Q6
HD	*200*	*–*	*183*	*219*	*50*	*215*	*323*	
ND	315	–	287	343	50	340	408	ATV9B0C31Q6
HD	*250*	*–*	*228*	*273*	*50*	*275*	*413*	
ND	400	–	363	434	50	425	510	ATV9B0C40Q6
HD	*315*	*–*	*287*	*343*	*50*	*340*	*510*	
ND	500	–	453	541	50	520	624	ATV9B0C50Q6
HD	*400*	*–*	*362*	*433*	*50*	*425*	*638*	
ND	630	–	568	678	50	650	780	ATV9B0C63Q6
HD	*500*	*–*	*453*	*541*	*50*	*520*	*780*	
ND	800	–	718	859	50	830	996	ATV9B0C80Q6
HD	*630*	*–*	*569*	*680*	*50*	*650*	*975*	
ND	1000	–	898	1073	50	1030	1236	ATV9B0M10Q6
HD	*800*	*–*	*718*	*859*	*50*	*830*	*1245*	
ND	1200	–	1078	1288	50	1230	1476	ATV9B0M12Q6
HD	*1000*	*–*	*898*	*1073*	*50*	*1030*	*1545*	

(1) Integrated motor chokes allowing a shielded motor cable length up to 300 m/984 ft in category C3.
(2) These values are given for a nominal switching frequency of 2.5 kHz for use in continuous operation.
The switching frequency is adjustable from 2 to 4.9 kHz for all ratings.
Above 2.5 kHz, the drive will automatically reduce the switching frequency in the event of an excessive temperature rise.
For continuous operation above the nominal switching frequency, derate the nominal drive current. Contact your APM partner for more information.
(3) Typical value for the indicated motor power and for the maximum prospective line Isc.
(4) These references are built by combining sub-assemblies and accessories that are integrated by Altivar Process Modular Program members. Contact your APM partner for more information on possible single drive architectures.

Variable speed drives

Altivar Process ATV900

Modular Liquid-cooled drives

Three-phase supply voltage: 400 V 50/60 Hz

ATVM_CP20132

ATV9L0C13Q4

ATVM_CP20133

ATV9L0C50Q4

3

400 V (-15...10%) IP00 Standard Modular drives (1)								
Motor			Line supply			Altivar Process		
Power indicated on rating plate (2)			Line current (3)	Apparent power	Maximum prospective line Isc	Maximum continuous current (2)	Max. transient current for 60 s	Reference (4)
ND: Normal duty *HD: Heavy duty*			400V	400V				
	kW	*HP*	A	kVA	kA	A	A	
Altivar Process Modular Liquid								
THDi ≤48% at 100% load in Normal duty with 6-pulse supply *(5)*								
ND	132	-	244	169	50	250	300	ATV9L0C13Q4
HD	*110*	*-*	*210*	*145*	*50*	*211*	*317*	
ND	160	-	287	199	50	302	362	ATV9L0C16Q4
HD	*132*	*-*	*244*	*169*	*50*	*250*	*375*	
ND	200	-	350	242	50	370	444	ATV9L0C20Q4
HD	*160*	*-*	*287*	*199*	*50*	*302*	*453*	
ND	250	-	429	297	50	477	572	ATV9L0C25Q4
HD	*200*	*-*	*350*	*242*	*50*	*370*	*555*	
ND	315	-	536	371	50	590	708	ATV9L0C31Q4
HD	*250*	*-*	*429*	*297*	*50*	*477*	*716*	
ND	400	-	684	474	50	730	876	ATV9L0C40Q4
HD	*315*	*-*	*549*	*380*	*50*	*590*	*885*	
ND	500	-	847	587	50	900	1080	ATV9L0C50Q4
HD	*400*	*-*	*684*	*474*	*50*	*730*	*1095*	
ND	630	-	1056	732	50	1140	1368	ATV9L0C63Q4
HD	*500*	*-*	*847*	*587*	*50*	*900*	*1350*	
ND	800	-	1335	925	50	1420	1704	ATV9L0C80Q4
HD	*630*	*-*	*1062*	*736*	*50*	*1140*	*1710*	
ND	900	-	1502	1041	50	1600	1920	ATV9L0C90Q4
HD	*710*	*-*	*1188*	*823*	*50*	*1260*	*1890*	
ND	1000	-	1669	1156	50	1770	2124	ATV9L0M10Q4
HD	*800*	*-*	*1339*	*928*	*50*	*1420*	*2130*	
ND	1200	-	2005	1389	50	2140	2568	ATV9L0M12Q4
HD	*1000*	*-*	*1669*	*1156*	*50*	*1770*	*2655*	
ND	1500	-	2513	1741	50	2680	3216	ATV9L0M15Q4
HD	*1200*	*-*	*2005*	*1389*	*50*	*2140*	*3210*	
ND	1800	-	3028	2098	50	3200	3840	ATV9L0M18Q4
HD	*1400*	*-*	*2341*	*1622*	*50*	*2470*	*3705*	

(1) Integrated motor chokes allowing a shielded motor cable length up to 300 m/984 ft in category C3.

(2) These values are given for a nominal switching frequency of 2.5 kHz for use in continuous operation. The switching frequency is adjustable from 2 to 4.9 kHz for all ratings.
Above 2.5 kHz, the drive will automatically reduce the switching frequency in the event of an excessive temperature rise.
For continuous operation above the nominal switching frequency, derate the nominal drive current. Contact your APM patner for more information.

(3) Typical value for the indicated motor power and for the maximum prospective line Isc.

(4) These references are built by combining sub-assemblies and accessories that are integrated by Altivar Process Modular Program members. Contact your APM partner for more information on possible drive architectures.

(5) APM-L architecture is ready for 12-pulse supply which allows a THDi ≤9%.

Variable speed drives

Altivar Process ATV900

Modular Liquid-cooled drives

Three-phase supply voltage: 440 V 50/60 Hz

ATVM_CP20134

ATV9L0C80R4

ATVM_CP20135

ATV9L0M10R4

440 V (-15...10%) IP00 Standard Modular drives *(1)*

Motor			Line supply			Altivar Process		
Power indicated on rating plate *(2)*			Line current *(3)*	Apparent power	Maximum prospective line Isc	Maximum continuous current *(2)*	Max. transient current for 60 s	Reference *(4)*
ND: Normal duty *HD: Heavy duty*			440V	440V				
	kW	*HP*	A	kVA	kA	A	A	
Altivar Process Modular Liquid								
THDi ≤48% at 100% load in Normal duty with 6-pulse supply *(5)*								
ND	132	-	228	174	50	250	300	ATV9L0C13R4
HD	*110*	*-*	*198*	*151*	*50*	*211*	*317*	
ND	160	-	266	203	50	302	362	ATV9L0C16R4
HD	*132*	*-*	*228*	*174*	*50*	*250*	*375*	
ND	200	-	323	246	50	370	444	ATV9L0C20R4
HD	*160*	*-*	*266*	*203*	*50*	*302*	*453*	
ND	250	-	394	300	50	477	572	ATV9L0C25R4
HD	*200*	*-*	*323*	*246*	*50*	*370*	*555*	
ND	315	-	490	373	50	590	708	ATV9L0C31R4
HD	*250*	*-*	*394*	*300*	*50*	*477*	*716*	
ND	400	-	627	478	50	730	876	ATV9L0C40R4
HD	*315*	*-*	*506*	*386*	*50*	*590*	*885*	
ND	500	-	774	590	50	900	1080	ATV9L0C50R4
HD	*400*	*-*	*627*	*478*	*50*	*730*	*1095*	
ND	630	-	963	734	50	1140	1368	ATV9L0C63R4
HD	*500*	*-*	*774*	*590*	*50*	*900*	*1350*	
ND	800	-	1217	927	50	1420	1704	ATV9L0C80R4
HD	*630*	*-*	*969*	*738*	*50*	*1140*	*1710*	
ND	900	-	1365	1040	50	1600	1920	ATV9L0C90R4
HD	*710*	*-*	*1083*	*825*	*50*	*1260*	*1890*	
ND	1000	-	1518	1157	50	1770	2124	ATV9L0M10R4
HD	*800*	*-*	*1220*	*930*	*50*	*1420*	*2130*	
ND	1200	-	1820	1387	50	2140	2568	ATV9L0M12R4
HD	*1000*	*-*	*1518*	*1157*	*50*	*1770*	*2655*	
ND	1500	-	2279	1737	50	2680	3216	ATV9L0M15R4
HD	*1200*	*-*	*1820*	*1387*	*50*	*2140*	*3210*	
ND	1800	-	2741	2089	50	3200	3840	ATV9L0M18R4
HD	*1400*	*-*	*2125*	*1619*	*50*	*2470*	*3705*	

(1) Integrated motor chokes allowing a shielded motor cable length up to 300 m/984 ft in category C3.

(2) These values are given for a nominal switching frequency of 2.5 kHz for use in continuous operation. The switching frequency is adjustable from 2 to 4.9 kHz for all ratings. Above 2.5 kHz, the drive will automatically reduce the switching frequency in the event of an excessive temperature rise. For continuous operation above the nominal switching frequency, derate the nominal drive current. Contact your APM partner for more information.

(3) Typical value for the indicated motor power and for the maximum prospective line Isc.

(4) These references are built by combining sub-assemblies and accessories that are integrated by Altivar Process Modular Program members. Contact your APM partner for more information on possible drive architectures.

(5) APM-L architecture is ready for 12-pulse supply which allows a THDi ≤9%.

Variable speed drives

Altivar Process ATV900

Modular Liquid-cooled drives

Three-phase supply voltage: 480 V 50/60 Hz

ATVM_CP20136

ATV9L0M15T4

ATVM_CP20137

ATV9L0M18T4

480 V (-15...10%) IP00 Standard Modular drives *(1)*

Motor			Line supply			Altivar Process		
Power indicated on rating plate *(2)*			Line current *(3)*	Apparent power	Maximum prospective line Isc	Maximum continuous current *(2)*	Max. transient current for 60 s	Reference *(4)*
ND: Normal duty *HD: Heavy duty*			480V	480V				
	kW	*HP*	A	kVA	kA	A	A	
Altivar Process Modular Liquid								
THDi ≤48% at 100% load in Normal duty with 6-pulse supply *(5)*								
ND	-	200	230	191	50	250	300	ATV9L0C13T4
HD	-	*150*	*183*	*152*	*50*	*211*	*317*	
ND	-	250	278	231	50	302	362	ATV9L0C16T4
HD	-	*200*	*230*	*191*	*50*	*250*	*375*	
ND	-	300	327	272	50	370	444	ATV9L0C20T4
HD	-	*250*	*278*	*231*	*50*	*302*	*453*	
ND	-	400	425	353	50	477	572	ATV9L0C25T4
HD	-	*300*	*327*	*272*	*50*	*370*	*555*	
ND	-	500	527	438	50	590	708	ATV9L0C31T4
HD	-	*400*	*425*	*353*	*50*	*477*	*716*	
ND	-	600	638	530	50	730	876	ATV9L0C40T4
HD	-	*500*	*540*	*449*	*50*	*590*	*885*	
ND	-	700	738	614	50	900	1080	ATV9L0C50T4
HD	-	*600*	*638*	*530*	*50*	*730*	*1095*	
ND	-	900	938	780	50	1140	1368	ATV9L0C63T4
HD	-	*700*	*738*	*614*	*50*	*900*	*1350*	
ND	-	1100	1148	954	50	1420	1704	ATV9L0C80T4
HD	-	*900*	*944*	*785*	*50*	*1140*	*1710*	
ND	-	1300	1345	1118	50	1600	1920	ATV9L0C90T4
HD	-	*1000*	*1045*	*869*	*50*	*1260*	*1890*	
ND	-	1400	1451	1206	50	1770	2124	ATV9L0M10T4
HD	-	*1100*	*1151*	*957*	*50*	*1420*	*2130*	
ND	-	1700	1761	1464	50	2140	2568	ATV9L0M12T4
HD	-	*1400*	*1451*	*1206*	*50*	*1770*	*2655*	
ND	-	2200	2282	1897	50	2680	3216	ATV9L0M15T4
HD	-	*1700*	*1761*	*1464*	*50*	*2140*	*3210*	
ND	-	2500	2598	2160	50	3200	3840	ATV9L0M18T4
HD	-	*2000*	*2073*	*1723*	*50*	*2470*	*3705*	

(1) Integrated motor chokes allowing a shielded motor cable length up to 300 m/984 ft in category C3.

(2) These values are given for a nominal switching frequency of 2.5 kHz for use in continuous operation. The switching frequency is adjustable from 2 to 4.9 kHz for all ratings.
Above 2.5 kHz, the drive will automatically reduce the switching frequency in the event of an excessive temperature rise.
For continuous operation above the nominal switching frequency, derate the nominal drive current. Contact your APM partner for more information

(3) Typical value for the indicated motor power and for the maximum prospective line Isc.

(4) These references are built by combining sub-assemblies and accessories that are integrated by Altivar Process Modular Program members. Contact your APM partner for more information on possible drive architectures.

(5) APM-L architecture is ready for 12-pulse supply which allows a THDi ≤9%.

Variable speed drives

Altivar Process ATV900

Modular Liquid-cooled drives

Three-phase supply voltage: 500 V 50/60 Hz

ATVM_CP20132

ATV9L0C40N6

ATVM_CP20133

ATV9L0C71N6

500 V (-10...15%) IP00 Standard Modular drives (1)								
Motor			Line supply			Altivar Process		
Power indicated on rating plate (2)			Line current (3)	Apparent power	Maximum prospective line Isc	Maximum continuous current (2)	Max. transient current for 60 s	Reference (4)
ND: Normal duty *HD: Heavy duty*			500V	500V				
	kW	*HP*	A	kVA	kA	A	A	
Altivar Process Modular Liquid								
THDi ≤48% at 100% load in Normal duty with 6-pulse supply (5)								
ND	132	-	196	170	50	215	258	ATV9L0C20N6
HD	*110*	*-*	*169*	*146*	*50*	*175*	*263*	
ND	200	-	281	243	50	308	370	ATV9L0C28N6
HD	*160*	*-*	*230*	*199*	*50*	*240*	*360*	
ND	220	-	307	266	50	340	408	ATV9L0C31N6
HD	*180*	*-*	*256*	*222*	*50*	*275*	*413*	
ND	250	-	344	298	50	425	510	ATV9L0C40N6
HD	*220*	*-*	*307*	*266*	*50*	*340*	*510*	
ND	315	-	429	372	50	480	576	ATV9L0C45N6
HD	*250*	*-*	*344*	*298*	*50*	*370*	*555*	
ND	400	-	549	475	50	590	708	ATV9L0C56N6
HD	*315*	*-*	*442*	*383*	*50*	*480*	*720*	
ND	500	-	679	588	50	740	888	ATV9L0C71N6
HD	*400*	*-*	*549*	*475*	*50*	*590*	*885*	
ND	630	-	846	733	50	930	1116	ATV9L0C90N6
HD	*500*	*-*	*679*	*588*	*50*	*740*	*1110*	
ND	800	-	1070	927	50	1230	1476	ATV9L0M12N6
HD	*710*	*-*	*957*	*829*	*50*	*1030*	*1545*	
ND	1000	-	1335	1156	50	1425	1710	ATV9L0M14N6
HD	*800*	*-*	*1070*	*927*	*50*	*1130*	*1695*	
ND	1200	-	1603	1388	50	1620	1944	ATV9L0M16N6
HD	*900*	*-*	*1204*	*1043*	*50*	*1330*	*1995*	
ND	1300	-	1737	1504	50	1820	2184	ATV9L0M18N6
HD	*1000*	*-*	*1335*	*1156*	*50*	*1425*	*2138*	
ND	1600	-	2141	1854	50	2220	2664	ATV9L0M22N6
HD	*1200*	*-*	*1602*	*1387*	*50*	*1720*	*2580*	
ND	1900	-	2550	2208	50	2620	3144	ATV9L0M26N6
HD	*1500*	*-*	*2005*	*1736*	*50*	*2120*	*3180*	

(1) Integrated motor chokes allowing a shielded motor cable length up to 300 m/984 ft in category C3.

(2) These values are given for a nominal switching frequency of 2.5 kHz for use in continuous operation. The switching frequency is adjustable from 2 to 4.9 kHz for all ratings. Above 2.5 kHz, the drive will automatically reduce the switching frequency in the event of an excessive temperature rise. For continuous operation above the nominal switching frequency, derate the nominal drive current. Contact your APM partner for more information.

(3) Typical value for the indicated motor power and for the maximum prospective line Isc.

(4) These references are built by combining sub-assemblies and accessories that are integrated by Altivar Process Modular Program members. Contact your APM partner for more information on possible drive architectures.

(5) APM-L architecture is ready for 12-pulse supply which allows a THDi ≤9%.

Variable speed drives

Altivar Process ATV900

Modular Liquid-cooled drives

Three-phase supply voltage: 600 V 50/60 Hz

ATVM_CP20134

ATV9L0M14T6

ATVM_CP20135

ATV9L0M16T6

3

600 V (-15...10%) IP00 Standard Modular drives (1)								
Motor			Line supply			Altivar Process		
Power indicated on rating plate (2)			Line current (3)	Apparent power	Maximum prospective line Isc	Maximum continuous current (2)	Max. transient current for 60 s	Reference (4)
ND: Normal duty HD: Heavy duty			600V	600V				
	kW	HP	A	kVA	kA	A	A	
Altivar Process Modular Liquid								
THDi ≤48% at 100% load in Normal duty with 6-pulse supply (5)								
ND	-	200	184	191	50	215	258	ATV9L0C20T6
HD	*-*	*150*	*146*	*152*	*50*	*175*	*263*	
ND	-	300	261	271	50	308	370	ATV9L0C28T6
HD	*-*	*200*	*184*	*191*	*50*	*240*	*360*	
ND	-	350	302	314	50	340	408	ATV9L0C31T6
HD	*-*	*250*	*223*	*232*	*50*	*275*	*413*	
ND	-	450	381	396	50	425	510	ATV9L0C40T6
HD	*-*	*350*	*302*	*314*	*50*	*340*	*510*	
ND	-	500	422	439	50	480	576	ATV9L0C45T6
HD	*-*	*400*	*340*	*353*	*50*	*370*	*555*	
ND	-	600	512	532	50	590	708	ATV9L0C56T6
HD	*-*	*500*	*434*	*451*	*50*	*480*	*720*	
ND	-	700	592	615	50	740	888	ATV9L0C71T6
HD	*-*	*600*	*512*	*532*	*50*	*590*	*885*	
ND	-	900	751	780	50	930	1116	ATV9L0C90T6
HD	*-*	*700*	*592*	*615*	*50*	*740*	*1110*	
ND	-	1200	996	1035	50	1230	1476	ATV9L0M12T6
HD	*-*	*1000*	*838*	*871*	*50*	*1030*	*1545*	
ND	-	1400	1159	1204	50	1425	1710	ATV9L0M14T6
HD	*-*	*1100*	*919*	*955*	*50*	*1130*	*1695*	
ND	-	1600	1325	1377	50	1620	1944	ATV9L0M16T6
HD	*-*	*1300*	*1081*	*1123*	*50*	*1330*	*1995*	
ND	-	1800	1490	1548	50	1820	2184	ATV9L0M18T6
HD	*-*	*1400*	*1162*	*1208*	*50*	*1425*	*2138*	
ND	-	2200	1823	1895	50	2220	2664	ATV9L0M22T6
HD	*-*	*1700*	*1409*	*1464*	*50*	*1720*	*2580*	
ND	-	2600	2156	2241	50	2620	3144	ATV9L0M26T6
HD	*-*	*2100*	*1740*	*1808*	*50*	*2120*	*3180*	

(1) Integrated motor chokes allowing a shielded motor cable length up to 300 m/984 ft in category C3.

(2) These values are given for a nominal switching frequency of 2.5 kHz for use in continuous operation.
The switching frequency is adjustable from 2 to 4.9 kHz for all ratings.
Above 2.5 kHz, the drive will automatically reduce the switching frequency in the event of an excessive temperature rise.
For continuous operation above the nominal switching frequency, derate the nominal drive current.
Contact your APM partner for more information.

(3) Typical value for the indicated motor power and for the maximum prospective line Isc.

(4) These references are built by combining sub-assemblies and accessories that are integrated by Altivar Process Modular Program members. Contact your APM partner for more information on possible drive architectures.

(5) APM-L architecture is ready for 12-pulse supply which allows a THDi ≤9%.

Variable speed drives

Altivar Process ATV900

Modular Liquid-cooled drives

Three-phase supply voltage: 690 V 50/60 Hz

ATVM_CP20136

ATV9L0M22Q6

ATVM_CP20137

ATV9L0M26Q6

690 V (-15...10%) IP00 Standard Modular drives *(1)*

Motor			Line supply			Altivar Process		
Power indicated on rating plate *(2)*			Line current *(3)*	Apparent power	Maximum prospective line Isc	Maximum continuous current *(2)*	Max. transient current for 60 s	Reference *(4)*
ND: Normal duty *HD: Heavy duty*			690V	690V				
	kW	*HP*	A	kVA	kA	A	A	
Altivar Process Modular Liquid								
THDi ≤48% at 100% load in Normal duty with 6-pulse supply *(5)*								
ND	200	-	218	261	50	215	258	ATV9L0C20Q6
HD	*160*	*-*	*184*	*220*	*50*	*175*	*263*	
ND	280	-	290	347	50	308	370	ATV9L0C28Q6
HD	*220*	*-*	*236*	*282*	*50*	*240*	*360*	
ND	315	-	322	385	50	340	408	ATV9L0C31Q6
HD	*250*	*-*	*262*	*313*	*50*	*275*	*413*	
ND	400	-	399	477	50	425	510	ATV9L0C40Q6
HD	*315*	*-*	*322*	*385*	*50*	*340*	*510*	
ND	450	-	446	533	50	480	576	ATV9L0C45Q6
HD	*355*	*-*	*359*	*429*	*50*	*370*	*555*	
ND	560	-	563	673	50	590	708	ATV9L0C56Q6
HD	*450*	*-*	*462*	*552*	*50*	*480*	*720*	
ND	710	-	700	837	50	740	888	ATV9L0C71Q6
HD	*560*	*-*	*563*	*673*	*50*	*590*	*885*	
ND	900	-	875	1046	50	930	1116	ATV9L0C90Q6
HD	*710*	*-*	*700*	*837*	*50*	*740*	*1110*	
ND	1200	-	1260	1506	50	1230	1476	ATV9L0M12Q6
HD	*1000*	*-*	*976*	*1166*	*50*	*1030*	*1545*	
ND	1400	-	1355	1619	50	1425	1710	ATV9L0M14Q6
HD	*1100*	*-*	*1070*	*1279*	*50*	*1130*	*1695*	
ND	1600	-	1547	1849	50	1620	1944	ATV9L0M16Q6
HD	*1300*	*-*	*1262*	*1508*	*50*	*1330*	*1995*	
ND	1800	-	1740	2080	50	1820	2184	ATV9L0M18Q6
HD	*1400*	*-*	*1357*	*1622*	*50*	*1425*	*2138*	
ND	2200	-	2128	2543	50	2220	2664	ATV9L0M22Q6
HD	*1700*	*-*	*1644*	*1965*	*50*	*1720*	*2580*	
ND	2600	-	2517	3008	50	2620	3144	ATV9L0M26Q6
HD	*2100*	*-*	*2030*	*2426*	*50*	*2120*	*3180*	

(1) Integrated motor chokes allowing a shielded motor cable length up to 300 m/984 ft in category C3.

(2) These values are given for a nominal switching frequency of 2.5 kHz for use in continuous operation.
The switching frequency is adjustable from 2 to 4.9 kHz for all ratings.
Above 2.5 kHz, the drive will automatically reduce the switching frequency in the event of an excessive temperature rise.
For continuous operation above the nominal switching frequency, derate the nominal drive current.
Contact your APM partner for more information.

(3) Typical value for the indicated motor power and for the maximum prospective line Isc.

(4) These references are built by combining sub-assemblies and accessories that are integrated by Altivar Process Modular Program members. Contact your APM partner for more information on possible drive architectures.

(5) APM-L architecture is ready for 12-pulse supply which allows a THDi ≤9%.

Variable speed drives

Altivar Process ATV900

Braking units 400 V power supply
Standard drives

MODBUOC16Q4APM

Drive				Braking unit						
Nominal power ND: Normal duty *HD: Heavy duty*			Reference	Power rating		Minimum resistor value	Braking power Cycle *(1)*			Reference
							1	2	3	
	kW	*HP*		kW	*HP*	Ω				
400 V power supply - Standard drives										
ND	110	–	ATV9A0C11Q4	160	–	3x 6.7	198	116.16	75	**MODBUOC16Q4APM**
HD	*90*	–								
ND	132	–	ATV9A0C13Q4							
HD	*110*	–								
ND	160	–	ATV9A0C16Q4							
HD	*132*	–								
ND	200	–	ATV9A0C20Q4	315	–	3x 3.35	375	220	130	**MODBUOC31Q4APM**
HD	*160*	–								
ND	250	–	ATV9A0C25Q4							
HD	*200*	–								
ND	315	–	ATV9A0C31Q4							
HD	*250*	–								
ND	355	–	ATV9A0C35Q4	500	–	3x 2.23	600	352	225	**MODBUOC50Q4APM**
HD	*280*	–								
ND	400	–	ATV9A0C40Q4							
HD	*315*	–								
ND	450	–	ATV9A0C45Q4							
HD	*355*	–								
ND	500	–	ATV9A0C50Q4							
HD	*400*	–								
ND	560	–	ATV9A0C56Q4	630	–	6x 3,35	750	440	260	**MODBUOC63Q4APM**
HD	*450*	–								
ND	630	–	ATV9A0C63Q4							
HD	*500*	–								
ND	710	–	ATV9A0C71Q4	800	–	6x 2,68 ou 3x 2,23 + 3x 3,35	945	554,4	355	**MODBUOC80Q4APM**
HD	*560*	–								
ND	800	–	ATV9A0C80Q4							
HD	*630*	–								
ND	1000	–	ATV9A0M10Q4							
HD	*800*	–								

(1) Value of the average power that can be dissipated at 50 °C/122 °F. For a 240 s period:
- Cycle 1: 12 s braking at overload (=5%)
- Cycle 2: 120 s braking at overload (=50%)
- Cycle 3: 240 s continuous braking (=100%)

Variable speed drives

Altivar Process ATV900

Braking units 400 V power supply
Low Harmonic/Regenerative drives

MODBUOC31Q4APM

Braking units 400 V power supply (continued)

Drive				Braking unit						
Nominal power			Reference	Power rating		Minimum resistor value	Braking power Cycle (1)			Reference
ND: Normal duty *HD: Heavy duty*							1	2	3	
	kW	*HP*		kW	*HP*	Ω				
400 V power supply - Low Harmonic/Regenerative drives										
ND	110	–	ATV9B0C11Q4	160	–	3x 6.7	198	116.16	75	**MODBUOC16Q4APM**
HD	*90*	–								
ND	132	–	ATV9B0C13Q4							
HD	*110*	–								
ND	160	–	ATV9B0C16Q4							
HD	*132*	–								
ND	200	–	ATV9B0C20Q4	315	–	3x 3.35	375	220	130	**MODBUOC31Q4APM**
HD	*160*	–								
ND	250	–	ATV9B0C25Q4							
HD	*200*	–								
ND	315	–	ATV9B0C31Q4							
HD	*250*	–								
ND	355	–	ATV9B0C35Q4	500	–	3x 2,23	600	352	225	**MODBUOC50Q4APM**
HD	*280*	–								
ND	400	–	ATV9B0C40Q4							
HD	*315*	–								
ND	450	–	ATV9B0C45Q4							
HD	*355*	–								
ND	500	–	ATV9B0C50Q4							
HD	*400*	–								
ND	560	–	ATV9B0C56Q4							
HD	*450*	–								
ND	630	–	ATV9B0C63Q4							
HD	*500*	–								
ND	710	–	ATV9B0C71Q4							
HD	*560*	–								
ND	800	–	ATV9B0C80Q4							
HD	*630*	–								
ND	1000	–	ATV9B0M10Q4							
HD	*800*	–								

(1) Value of the average power that can be dissipated at 50 °C/122 °F. For a 240 s period:
- Cycle 1: 12 s braking at overload (=5%)
- Cycle 2: 120 s braking at overload (=50%)
- Cycle 3: 240 s continuous braking (=100%)

Variable speed drives

Altivar Process ATV900

Braking units 400 V power supply
Liquid-cooled drives

MODBUOC50Q4APM

Braking units 400 V power supply (continued)

Drive				Braking unit						
Nominal power			Reference	Power rating		Minimum resistor value	Braking power			Reference
ND: Normal duty *HD: Heavy duty*							Cycle *(1)*			
							1	2	3	
	kW	*HP*		kW	*HP*	Ω				
400 V power supply - Liquid-cooled drives										
ND	132	-	ATV9L0C13Q4	160	–	3x 6.7	198	116.16	75	**MODBUOC16Q4APM**
HD	110	-								
ND	160	-	ATV9L0C16Q4							
HD	132	-								
ND	200	-	ATV9L0C20Q4	315	–	3x 3.35	375	220	130	**MODBUOC31Q4APM**
HD	160	-								
ND	250	-	ATV9L0C25Q4							
HD	200	-								
ND	315	-	ATV9L0C31Q4							
HD	250	-								
ND	400	-	ATV9L0C40Q4	500	–	3x 2.23	600	352	225	**MODBUOC50Q4APM**
HD	315	-								
ND	500	-	ATV9L0C50Q4							
HD	400	-								
ND	630	-	ATV9L0C63Q4	630	–	6x 3.35	750	440	260	**MODBUOC63Q4APM**
HD	500	-								
ND	800	-	ATV9L0C80Q4	800	–	6x 2.68 or 3x 2.23 + 3x 3.35	945	554.4	355	**MODBUOC80Q4APM**
HD	630	-								
ND	900	-	ATV9L0C90Q4							
HD	710	-								
ND	1000	-	ATV9L0M10Q4							
HD	800	-								
ND	1200	-	ATV9L0M12Q4							
HD	1000	-								
ND	1500	-	ATV9L0M15Q4							
HD	1200	-								
ND	1800	-	ATV9L0M18Q4							
HD	1400	-								

(1) Value of the average power that can be dissipated at 50 °C/122 °F. For a 240 s period:
- Cycle 1: 12 s braking at overload (=5%)
- Cycle 2: 120 s braking at overload (=50%)
- Cycle 3: 240 s continuous braking (=100%)

Variable speed drives

Altivar Process ATV900

Braking units 440 V power supply
Standard drives

MODBUOC16R4APM

Braking units 440 V power supply										
Drive				Braking unit						
Nominal power			Reference	Power rating		Minimum resistor value	Braking power			Reference
ND: Normal duty *HD: Heavy duty*							Cycle *(1)*			
							1	2	3	
	kW	*HP*		kW	*HP*	Ω				
440 V power supply - Standard drives										
ND	110	–	ATV9A0C11R4	160	–	3x 6.7	198	116.16	75	**MODBUOC16R4APM**
HD	90	–								
ND	132	–	ATV9A0C13R4							
HD	110	–								
ND	160	–	ATV9A0C16R4							
HD	132	–								
ND	200	–	ATV9A0C20R4	315	–	3x 3.35	375	220	130	**MODBUOC31R4APM**
HD	160	–								
ND	250	–	ATV9A0C25R4							
HD	200	–								
ND	315	–	ATV9A0C31R4							
HD	250	–								
ND	355	–	ATV9A0C35R4	500	–	3x 2.23	600	352	225	**MODBUOC50R4APM**
HD	280	–								
ND	400	–	ATV9A0C40R4							
HD	315	–								
ND	450	–	ATV9A0C45R4							
HD	355	–								
ND	500	–	ATV9A0C50R4							
HD	400	–								
ND	560	–	ATV9A0C56R4	630	–	6x 3.35	750	440	260	**MODBUOC63R4APM**
HD	450	–								
ND	630	–	ATV9A0C63R4							
HD	500	–								
ND	710	–	ATV9A0C71R4	800	–	6x 2.68 or 3x 2.23 + 3x 3.35	945	554.4	355	**MODBUOC80R4APM**
HD	580	–								
ND	800	–	ATV9A0C80R4							
HD	630	–								
ND	1000	–	ATV9A0M10R4							
HD	800	–								

(1) Value of the average power that can be dissipated at 50 °C/122 °F. For a 240 s period:
- Cycle 1: 12 s braking at overload (=5%)
- Cycle 2: 120 s braking at overload (=50%)
- Cycle 3: 240 s continuous braking (=100%)

Variable speed drives

Altivar Process ATV900

Braking units 440 V power supply
Low Harmonic/Regenerative drives

MODBUOC31R4APM

Drive				Braking unit						
Nominal power			Reference	Power rating		Minimum resistor value	Braking power			Reference
ND: Normal duty *HD: Heavy duty*							Cycle *(1)*			
							1	2	3	
	kW	*HP*		kW	*HP*	Ω				
440 V power supply - Low Harmonic/Regenerative drives										
ND	110	–	ATV9B0C11R4	160	–	3x 6.7	198	116.16	75	**MODBUOC16R4APM**
HD	90	–								
ND	132	–	ATV9B0C13R4							
HD	110	–								
ND	160	–	ATV9B0C16R4							
HD	132	–								
ND	200	–	ATV9B0C20R4	315	–	3x 3.35	375	220	130	**MODBUOC31R4APM**
HD	160	–								
ND	250	–	ATV9B0C25R4							
HD	200	–								
ND	315	–	ATV9B0C31R4							
HD	250	–								
ND	355	–	ATV9B0C35R4	500	–	3x 2.23	600	352	225	**MODBUOC50R4APM**
HD	280	–								
ND	400	–	ATV9B0C40R4							
HD	315	–								
ND	450	–	ATV9B0C45R4							
HD	355	–								
ND	500	–	ATV9B0C50R4							
HD	400	–								
ND	560	–	ATV9B0C56R4							
HD	*450*	–								
ND	630	–	ATV9B0C63R4							
HD	*500*	–								
ND	710	–	ATV9B0C71R4							
HD	*560*	–								
ND	800	–	ATV9B0C80R4							
HD	*630*	–								
ND	1000	–	ATV9B0M10R4							
HD	800	–								

(1) Value of the average power that can be dissipated at 50 °C/122 °F. For a 240 s period:
- Cycle 1: 12 s braking at overload (=5%)
- Cycle 2: 120 s braking at overload (=50%)
- Cycle 3: 240 s continuous braking (=100%)

Variable speed drives

Altivar Process ATV900

Braking units 440 V power supply
Liquid-cooled drives

MODBUOC50R4APM

Braking units 440 V power supply (continued)

Drive				Braking unit						
Nominal power			Reference	Power rating		Minimum resistor value	Braking power			Reference
ND: Normal duty *HD: Heavy duty*							Cycle *(1)*			
							1	2	3	
	kW	*HP*		kW	*HP*	Ω				
440 V power supply - Liquid-cooled drives										
ND	132	-	ATV9L0C13R4	160	–	3x 6.7	198	116.16	75	**MODBUOC16R4APM**
HD	110	-								
ND	160	-	ATV9L0C16R4							
HD	132	-								
ND	200	-	ATV9L0C20R4	315	–	3x 3.35	375	220	130	**MODBUOC31R4APM**
HD	160	-								
ND	250	-	ATV9L0C25R4							
HD	200	-								
ND	315	-	ATV9L0C31R4							
HD	250	-								
ND	400	-	ATV9L0C40R4	500	–	3x 2.23	600	352	225	**MODBUOC50R4APM**
HD	315	-								
ND	500	-	ATV9L0C50R4							
HD	400	-								
ND	630	-	ATV9L0C63R4	630	–	6x 3.35	750	440	260	**MODBUOC63R4APM**
HD	500	-								
ND	800	-	ATV9L0C80R4	800	–	6x 2.68 or 3x 2.23 + 3x 3.35	945	554.4	355	**MODBUOC80R4APM**
HD	630	-								
ND	900	-	ATV9L0C90R4							
HD	710	-								
ND	1000	-	ATV9L0M10R4							
HD	800	-								
ND	1200	-	ATV9L0M12R4							
HD	1000	-								
ND	1500	-	ATV9L0M15R4							
HD	1200	-								
ND	1800	-	ATV9L0M18R4							
HD	1400	-								

(1) Value of the average power that can be dissipated at 50 °C/122 °F. For a 240 s period:
- *Cycle 1: 12 s braking at overload (=5%)*
- *Cycle 2: 120 s braking at overload (=50%)*
- *Cycle 3: 240 s continuous braking (=100%)*

Variable speed drives

Altivar Process ATV900

Braking units 480 V power supply
Standard drives

ATVM_OP19057

MODBUOC80T4APM

Braking units 480 V power supply

Drive				Braking unit						
Nominal power			Reference	Power rating		Minimum resistor value	Braking power			Reference
ND: Normal duty *HD: Heavy duty*							Cycle *(1)*			
							1	2	3	
	kW	*HP*		kW	*HP*	Ω				
480 V power supply - Standard drives										
ND	–	*150*	ATV9A0C11T4	–	*250*	3x 6.7	198	116.16	75	**MODBUOC16T4APM**
HD	–	*125*								
ND	–	*200*	ATV9A0C13T4							
HD	–	*150*								
ND	–	*250*	ATV9A0C16T4							
HD	–	*200*								
ND	–	*300*	ATV9A0C20T4	–	*500*	3x 3.35	375	220	130	**MODBUOC31T4APM**
HD	–	*250*								
ND	–	*400*	ATV9A0C25T4							
HD	–	*300*								
ND	–	*500*	ATV9A0C31T4							
HD	–	*400*								
ND	–	*550*	ATV9A0C35T4	–	*700*	3x 2.23	600	352	225	**MODBUOC50T4APM**
HD	–	*450*								
ND	–	*600*	ATV9A0C40T4							
HD	–	*500*								
ND	–	*650*	ATV9A0C45T4							
HD	–	*550*								
ND	–	*700*	ATV9A0C50T4							
HD	–	*600*								
ND	–	*800*	ATV9A0C56T4	–	*900*	6x 3.35	750	440	260	**MODBUOC63T4APM**
HD	–	*650*								
ND	–	*900*	ATV9A0C63T4							
HD	–	*700*								
ND	–	*1000*	ATV9A0C71T4	–	*1100*	6x 2.68 or 3x 2.23 + 3x 3.35	945	554.4	355	**MODBUOC80T4APM**
HD	–	*800*								
ND	–	*1100*	ATV9A0C80T4							
HD	–	*900*								
ND	–	*1400*	ATV9A0M10T4							
HD	–	*1100*								

(1) Value of the average power that can be dissipated at 50 °C/122 °F. For a 240 s period:
- *Cycle 1: 12 s braking at overload (=5%)*
- *Cycle 2: 120 s braking at overload (=50%)*
- *Cycle 3: 240 s continuous braking (=100%)*

Variable speed drives

Altivar Process ATV900

Braking units 480 V power supply
Low Harmonic/Regenerative drives

MODBUOC50T4APM

Braking units 480 V power supply (continued)

Drive				Braking unit						
Nominal power			Reference	Power rating		Minimum resistor value	Braking power			Reference
ND: Normal duty *HD: Heavy duty*							Cycle *(1)*			
							1	2	3	
	kW	*HP*		kW	*HP*	Ω				
480 V power supply - Low Harmonic/Regenerative drives										
ND	–	*150*	ATV9B0C11T4	–	*250*	3x 6.7	198	116.16	75	**MODBUOC16T4APM**
HD	–	*125*								
ND	–	*200*	ATV9B0C13T4							
HD	–	*150*								
ND	–	*250*	ATV9B0C16T4							
HD	–	*200*								
ND	–	*300*	ATV9B0C20T4	–	*500*	3x 3.35	375	220	130	**MODBUOC31T4APM**
HD	–	*250*								
ND	–	*400*	ATV9B0C25T4							
HD	–	*300*								
ND	–	*500*	ATV9B0C31T4							
HD	–	*400*								
ND	–	*550*	ATV9B0C35T4	–	*700*	3x 2.23	600	352	225	**MODBUOC50T4APM**
HD	–	*450*								
ND	–	*600*	ATV9B0C40T4							
HD	–	*500*								
ND	–	*650*	ATV9B0C45T4							
HD	–	*550*								
ND	–	*700*	ATV9B0C50T4							
HD	–	*600*								
ND	–	*800*	ATV9B0C56T4							
HD	–	*650*								
ND	–	*900*	ATV9B0C63T4							
HD	–	*700*								
ND	–	*1000*	ATV9B0C71T4							
HD	–	*800*								
ND	–	*1100*	ATV9B0C80T4							
HD	–	*900*								
ND	–	*1400*	ATV9B0M10T4							
HD	–	*1100*								

(1) Value of the average power that can be dissipated at 50 °C/122 °F. For a 240 s period:
- *Cycle 1: 12 s braking at overload (=5%)*
- *Cycle 2: 120 s braking at overload (=50%)*
- *Cycle 3: 240 s continuous braking (=100%)*

Variable speed drives

Altivar Process ATV900

Braking units 480 V power supply
Liquid-cooled drives

MODBUOC16T4APM

Braking units 480 V power supply (continued)

Drive				Braking unit						
Nominal power			Reference	Power rating		Minimum resistor value	Braking power			Reference
ND: Normal duty *HD: Heavy duty*							Cycle *(1)*			
							1	2	3	
	kW	*HP*		kW	*HP*	Ω				
480 V power supply - Liquid-cooled drives										
ND	-	200	ATV9L0C13T4	–	250	3x 6.7	198	116.16	75	**MODBUOC16T4APM**
HD	-	150								
ND	-	250	ATV9L0C16T4							
HD	-	200								
ND	-	300	ATV9L0C20T4	–	500	3x 3.35	375	220	130	**MODBUOC31T4APM**
HD	-	250								
ND	-	400	ATV9L0C25T4							
HD	-	300								
ND	-	500	ATV9L0C31T4							
HD	-	400								
ND	-	600	ATV9L0C40T4	–	700	3x 2.23	600	352	225	**MODBUOC50T4APM**
HD	-	500								
ND	-	700	ATV9L0C50T4							
HD	-	600								
ND	-	900	ATV9L0C63T4	–	900	6x 3.35	750	440	260	**MODBUOC63T4APM**
HD	-	700								
ND	-	1100	ATV9L0C80T4	–	1100	6x 2.68 or 3x 2.23 + 3x 3.35	945	554.4	355	**MODBUOC80T4APM**
HD	-	900								
ND	-	1300	ATV9L0C90T4							
HD	-	1000								
ND	-	1400	ATV9L0M10T4							
HD	-	1100								
ND	-	1700	ATV9L0M12T4							
HD	-	1400								
ND	-	2200	ATV9L0M15T4							
HD	-	1700								
ND	-	2500	ATV9L0M18T4							
HD	-	2000								

(1) Value of the average power that can be dissipated at 50 °C/122 °F. For a 240 s period:
- *Cycle 1: 12 s braking at overload (=5%)*
- *Cycle 2: 120 s braking at overload (=50%)*
- *Cycle 3: 240 s continuous braking (=100%)*

Variable speed drives

Altivar Process ATV900

Braking units 500 V power supply
Standard and Liquid-cooled drives

MODBUOC40N6APM

Braking units 500 V power supply

Drive				Braking unit						
Nominal power			Reference	Power rating		Minimum resistor value	Braking power			Reference
ND: Normal duty *HD: Heavy duty*							Cycle *(1)*			
							1	2	3	
	kW	*HP*		kW	HP	Ω				
500 V power supply - Standard drives										
ND	75	–	ATV9A0C11N6	132	–	3x 11	240	140.8	85	MODBUOC20N6APM
HD	*55*	–								
ND	90	–	ATV9A0C13N6							
HD	*75*	–								
ND	110	–	ATV9A0C16N6							
HD	*90*	–								
ND	132	–	ATV9A0C20N6							
HD	*110*	–								
ND	160	–	ATV9A0C25N6	280	–	3x 5.5	472.5	277.2	165	MODBUOC40N6APM
HD	*132*	–								
ND	220	–	ATV9A0C31N6							
HD	*160*	–								
ND	280	–	ATV9A0C40N6							
HD	*220*	–								
ND	355	–	ATV9A0C50N6	450	–	3x 3.67	750	440	285	MODBUOC63N6APM
HD	*280*	–								
ND	450	–	ATV9A0C63N6							
HD	*355*	–								
ND	560	–	ATV9A0C80N6	560	–	6x 5.5	945	554.4	330	MODBUOC80N6APM
HD	*450*	–								
ND	710	–	ATV9A0M10N6	710	–	6x 4.4 or 3x 3.67 + 3x 5.5	1200	704	450	MODBUOM10N6APM
HD	*560*	–								
ND	800	–	ATV9A0M12N6	800	–	6x 3.67	1500	785	550	MODBUOM12N6APM
HD	*710*	–								
500 V power supply - Liquid-cooled drives										
ND	132	-	ATV9L0C20N6	132	–	3x 11	240	140.8	85	MODBUOC20N6APM
HD	110	-								
ND	200	-	ATV9L0C28N6	280	–	3x 5.5	472.5	277.2	165	MODBUOC40N6APM
HD	160	-								
ND	220	-	ATV9L0C31N6							
HD	180	-								
ND	250	-	ATV9L0C40N6							
HD	220	-								
ND	315	-	ATV9L0C45N6	450	–	3x 3.67	750	440	285	MODBUOC63N6APM
HD	250	-								
ND	400	-	ATV9L0C56N6							
HD	315	-								
ND	500	-	ATV9L0C71N6	560	–	6x 5.5	945	554.4	330	MODBUOC80N6APM
HD	400	-								
ND	630	-	ATV9L0C90N6	710	–	6x 4.4 or 3x 3.67 + 3x 5.5	1200	704	450	MODBUOM10N6APM
HD	500	-								
ND	800	-	ATV9L0M12N6	800	–	6x 3.67	1500	785	550	MODBUOM12N6APM
HD	710	-								
ND	1000	-	ATV9L0M14N6							
HD	800	-								
ND	1200	-	ATV9L0M16N6							
HD	900	-								
ND	1300	-	ATV9L0M18N6							
HD	1000	-								
ND	1600	-	ATV9L0M22N6							
HD	1200	-								
ND	1900	-	ATV9L0M26N6							
HD	1500	-								

(1) Value of the average power that can be dissipated at 50 °C/122 °F. For a 240 s period:
- Cycle 1: 12 s braking at overload (=5%)
- Cycle 2: 120 s braking at overload (=50%)
- Cycle 3: 240 s continuous braking (=100%)

Variable speed drives

Altivar Process ATV900

Braking units 600 V power supply
Standard and Liquid-cooled drives

MODBUOC40T6APM

Braking units 600 V power supply

Drive				Braking unit						
Nominal power			Reference	Power rating		Minimum resistor value	Braking power Cycle (1)			Reference
ND: Normal duty *HD: Heavy duty*							1	2	3	
	kW	*HP*		kW	HP	Ω				
600 V power supply - Standard drives										
ND	–	125	ATV9A0C11T6	–	*200*	3x 11	240	140.8	85	**MODBUOC20T6APM**
HD	–	100								
ND	–	150	ATV9A0C13T6							
HD	–	125								
ND	–	175	ATV9A0C16T6							
HD	–	150								
ND	–	200	ATV9A0C20T6							
HD	–	175								
ND	–	250	ATV9A0C25T6	–	*450*	3x 5.5	472.5	277.2	165	**MODBUOC40T6APM**
HD	–	200								
ND	–	350	ATV9A0C31T6							
HD	–	250								
ND	–	450	ATV9A0C40T6							
HD	–	350								
ND	–	550	ATV9A0C50T6	–	*650*	3x 3.67	750	440	285	**MODBUOC63T6APM**
HD	–	450								
ND	–	650	ATV9A0C63T6							
HD	–	550								
ND	–	800	ATV9A0C80T6	–	*800*	6x 5.5	945	554.4	330	**MODBUOC80T6APM**
HD	–	650								
ND	–	1000	ATV9A0M10T6	–	*1000*	6x 4.4 or 3x 3.67 + 3x 5.5	1200	704	450	**MODBUOM10T6APM**
HD	–	800								
ND	–	1200	ATV9A0M12T6	–	*1200*	6x 3.67	1500	785	550	**MODBUOM12T6APM**
HD	–	1000								
600 V power supply - Liquid-cooled drives										
ND	-	200	ATV9L0C20T6	–	200	3x 11	240	140.8	85	**MODBUOC20T6APM**
HD	-	150								
ND	-	300	ATV9L0C28T6	–	450	3x 5.5	472.5	277.2	165	**MODBUOC40T6APM**
HD	-	200								
ND	-	350	ATV9L0C31T6							
HD	-	250								
ND	-	450	ATV9L0C40T6							
HD	-	350								
ND	-	500	ATV9L0C45T6	–	650	3x 3.67	750	440	285	**MODBUOC63T6APM**
HD	-	400								
ND	-	600	ATV9L0C56T6							
HD	-	500								
ND	-	700	ATV9L0C71T6	–	800	6x 5.5	945	554.4	330	**MODBUOC80T6APM**
HD	-	600								
ND	-	900	ATV9L0C90T6	–	1000	6x 4.4 or 3x 3.67 + 3x 5.5	1200	704	450	**MODBUOM10T6APM**
HD	-	700								
ND	-	1200	ATV9L0M12T6	–	1200	6x 3.67	1500	785	550	**MODBUOM12T6APM**
HD	-	1000								
ND	-	1400	ATV9L0M14T6							
HD	-	1100								
ND	-	1600	ATV9L0M16T6							
HD	-	1300								
ND	-	1800	ATV9L0M18T6							
HD	-	1400								
ND	-	2200	ATV9L0M22T6							
HD	-	1700								
ND	-	2600	ATV9L0M26T6							
HD	-	2100								

(1) Value of the average power that can be dissipated at 50 °C/122 °F. For a 240 s period:
- Cycle 1: 12 s braking at overload (=5%)
- Cycle 2: 120 s braking at overload (=50%)
- Cycle 3: 240 s continuous braking (=100%)

Variable speed drives

Altivar Process ATV900

Braking units 690 V power supply
Standard and Liquid-cooled drives

MODBUOM12Q6APM

Braking units 690 V power supply

Drive				Braking unit						
Nominal power			Reference	Power rating		Minimum resistor value	Braking power			Reference
ND: Normal duty *HD: Heavy duty*							Cycle *(1)*			
							1	2	3	
	kW	*HP*		kW	*HP*	Ω				
690 V power supply - Standard drives										
ND	110	–	ATV9A0C11Q6	200	–	3x 11	240	140.8	85	MODBUOC20Q6APM
HD	*90*	–								
ND	132	–	ATV9A0C13Q6							
HD	*110*	–								
ND	160	–	ATV9A0C16Q6							
HD	*132*	–								
ND	200	–	ATV9A0C20Q6							
HD	*160*	–								
ND	250	–	ATV9A0C25Q6	400	–	3x 5.5	472.5	277.2	165	MODBUOC40Q6APM
HD	*200*	–								
ND	315	–	ATV9A0C31Q6							
HD	*250*	–								
ND	400	–	ATV9A0C40Q6							
HD	*315*	–								
ND	500	–	ATV9A0C50Q6	630	–	3x 3.67	750	440	285	MODBUOC63Q6APM
HD	*400*	–								
ND	630	–	ATV9A0C63Q6							
HD	*500*	–								
ND	800	–	ATV9A0C80Q6	800	–	6x 5.5	945	554.4	330	MODBUOC80Q6APM
HD	*630*	–								
ND	1000	–	ATV9A0M10Q6	1000	–	6x 4.4 or 3x 3.67 + 3x 5.5	1200	704	450	MODBUOM10Q6APM
HD	*800*	–								
ND	1200	–	ATV9A0M12Q6	1200	–	6x 3.67	1500	785	550	MODBUOM12Q6APM
HD	*1000*	–								
690 V power supply - Liquid-cooled drives										
ND	200	-	ATV9L0C20Q6	200	–	3x 11	240	140.8	85	MODBUOC20Q6APM
HD	160	-								
ND	280	-	ATV9L0C28Q6	400	–	3x 5.5	472.5	277.2	165	MODBUOC40Q6APM
HD	220	-								
ND	315	-	ATV9L0C31Q6							
HD	250	-								
ND	400	-	ATV9L0C40Q6							
HD	315	-								
ND	450	-	ATV9L0C45Q6	630	–	3x 3.67	750	440	285	MODBUOC63Q6APM
HD	355	-								
ND	560	-	ATV9L0C56Q6							
HD	450	-								
ND	710	-	ATV9L0C71Q6	800	–	6x 5.5	945	554.4	330	MODBUOC80Q6APM
HD	560	-								
ND	900	-	ATV9L0C90Q6	1000	–	6x 4.4 or 3x 3.67 + 3x 5.5	1200	704	450	MODBUOM10Q6APM
HD	710	-								
ND	1200	-	ATV9L0M12Q6	1200	–	6x 3.67	1500	785	550	MODBUOM12Q6APM
HD	1000	-								
ND	1400	-	ATV9L0M14Q6							
HD	1100	-								
ND	1600	-	ATV9L0M16Q6							
HD	1300	-								
ND	1800	-	ATV9L0M18Q6							
HD	1400	-								
ND	2200	-	ATV9L0M22Q6							
HD	1700	-								
ND	2600	-	ATV9L0M26Q6							
HD	2100	-								

(1) Value of the average power that can be dissipated at 50 °C/122 °F. For a 240 s period:
- Cycle 1: 12 s braking at overload (=5%)
- Cycle 2: 120 s braking at overload (=50%)
- Cycle 3: 240 s continuous braking (=100%)

Contents

4 - Drive Systems

Altivar Process Drive Systems

- **Altivar Process Drive Systems presentation** ..... *page 4/2*
- **High Performance Drive Systems** ..... *page 4/4*
  - High Performance Drive Systems presentation ..... *page 4/4*
  - Options ..... *page 4/7*
  - 380...415 V, IP23 High Performance Drive Systems ..... *page 4/8*
  - 480 V, IP23 High Performance Drive Systems ..... *page 4/9*
- **Low Harmonic/Regen Drive Systems** ..... *page 4/10*
  - Low Harmonic/Regen Drive Systems presentation ..... *page 4/10*
  - Options ..... *page 4/13*
  - 380...415 V, IP23 Low Harmonic/Regen Drive Systems ..... *page 4/14*
  - 480 V, IP23 Low Harmonic/Regen Drive Systems ..... *page 4/15*
- **Options** ..... *page 4/16*
  - Common CTO options ..... *page 4/16*
  - CTO options dependent on the drive rating ..... *page 4/17*
- **Dimensions** ..... *page 4/20*

Variable speed drives
Altivar Process ATV900
Drive Systems

ATV960C31Q4X1

Engineered Drive Systems

Altivar Process Drive Systems offer extensive flexibility for customers from different segments and for various applications.

Several solutions are available depending on customer requirements.

Configured to order (CTO)

Configured Drive Systems (CTO) can be quickly customized to fit your requirements via our Altivar Process Configurator Tool.

Thanks to pre-defined CTO options, the CTO variant significantly reduces the delivery time for individually adapted drives, ready to connect.

The available CTO options are:
- Increased IP54 protection rating
- Enclosure plinth for basic device
- Additional enclosure allowing cabling from the top or from the bottom
- Enclosure lighting and heating
- “Local/remote” key switch
- Ethernet port on front door
- Digital and analog I/O modules and relay output modules
- Communication modules for various fieldbus systems
- STO - SIL 3 Stop category 0 or 1 Emergency stop
- Front display module (FDM)
- Indicator lights on front door
- Motor/bearing temperature monitoring
- dv/dt filters for long motor cables
- Motor heating
- Circuit breaker
- Undervoltage coil for circuit breaker
- Motor for circuit breaker
- Automated mains disconnect
- Setting for 415 V + 10%
- Safety labels in the local language
- Design for IT mains
- Seaworthy packaging
- Braking unit (BUO)

Altivar Process Configuration Tool

Configure your drive system with the
Altivar Process Configurator Tool
altivar-process-configurator.schneider-electric.com

Presentation: page 1/11
Variable speed drives: page 2/2
Combinations: page 2/18
Communication buses and networks: page 2/30
Dimensions: page 2/68

Variable speed drives
Altivar Process ATV900
Drive Systems

Outdoor design

Multipulse design

Multidrive

Engineered Drive Systems (continued)

Engineered to order (ETO)

Our experts help you to find an effective Drive Systems (ETO) solution for your application. Starting from the integration of small drives up to individual enclosure design for harsh environments.

Enclosure modifications
- Different enclosure types
- Drives with reduced enclosure dimensions
- E-house integration
- Special colors
- Customer branded solutions
- Design for marine, automotive, and special applications
- Etc.

Cooling adaptations
- Separate air flow
- Connection to cooling channels
- Liquid-cooled drives
- Outdoor installations for harsh environments
- Different protection ratings
- Etc.

Electrical adaptations
- AC or DC multidrive
- Bypass solutions
- Multipulse or Active Front End (AFE)
- Various motor protection solutions
- Adaption to individual mains conditions
- Braking and regenerative solutions
- Etc.

To inquire about your individual drive solution, contact your local Schneider Electric drives expert or consult our *Customer Care Teams*.

Variable speed drives
Altivar Process ATV900
High Performance Drive Systems

ATV960C16Q4X1

Presentation

Concept

The ATV960 High Performance Drive Systems range offers standard enclosures ready to connect.
The modular system concept with more than 80 selectable options makes it possible to adapt the enclosure unit optimally to individual requirements.
The fully-tested, ready-to-connect enclosure allows quick drive installation and commissioning.

Power versus overload

For optimum adaptation to the application you can choose between two overload modes:

- Normal duty: High continuous power with an overload capability of 20% (for compressors, displacement pumps, blowers, etc.)
- Heavy duty: Reduced continuous power with an increased overload capability of 50% for 60 s for drives with enhanced requirements regarding overload capability, starting torque, load impacts, and control performance (such as mixers, crushers, mills, conveyors, etc.)

Standard equipment

The standard equipment contains frequency inverter modules, semiconductor fuses, a main switch, a line reactor to reduce the harmonics, a motor choke to limit overvoltage on the motor due to long cables, and spacious mains and motor bars for connecting the power cables.
The design is based on the standard enclosure system “Spacial SF” with a graphic operating panel integrated into the enclosure door.

Compact dimensions

Inside the enclosure there is an easily accessible and spaciously designed control panel with the control components. Despite its compact dimensions, the enclosure has enough space for additional extensions and is easily accessible for maintenance purposes.

Variable speed drives

Altivar Process ATV900
High Performance Drive Systems

Cooling concept

Device features

High motor performance

Optimum control over the motor in each operating state due to the new motor control method of the ATV960 High Performance Drive Systems.

- Asynchronous motors (all efficiency classes, high number of poles)
- Synchronous motors (PM motors, torque motors, reluctance motors)
- Special motors for submersible pumps

Extended connectivity

Integrated dual Ethernet as standard provides increased redundancy and supports RSTP (Rapid Spanning Tree Protocol).
Dynamic drive-to-drive communication for multi-motor drives with master/slave groups and optimum load sharing between all motors.

Cooling concept

The power section components are cooled in a separate cooling air channel. About 90% of the heat losses are evacuated via this channel. The inside of the enclosure is cooled via fans in the enclosure door.

When using the ‘‘increased IP54 protection’’ rating option, the separate air supply for the power section comes through the enclosure plinth.

Protection ratings

The standard design of Altivar Process High Performance Drive Systems complies with IP23 protection. This solution provides optimum cooling of the built-in frequency inverter modules and power components as well as maximum compactness.

For operation in harsh ambient conditions, increased IP54 protection is available as an option. This solution consists of a clearly specified and tested cooling system with a separate cooling air channel, which provides excellent reliability.

About 90% of the heat losses are evacuated via the separate cooling air channel. The inside of the enclosure is cooled via fans located in the enclosure door.

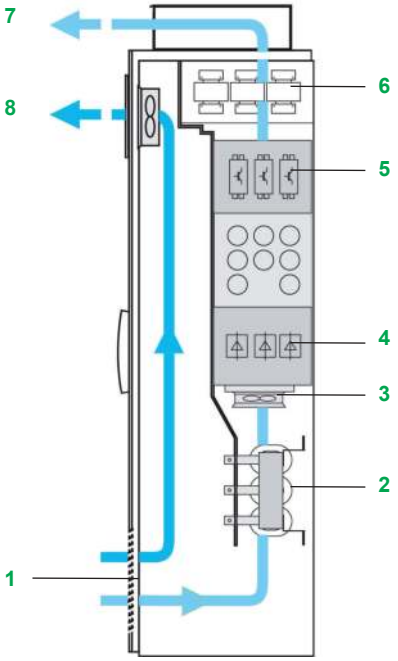

IP23 enclosure

Standard IP23 enclosure design

In order to avoid internal air short-circuits, the power sections of the components are located in the main cooling air channel.

The cooling air intake comes from a grid located in the bottom of the enclosure door. The internal fan, which is in a separate air channel, provides cooling of the power section. The air then comes out through the top of the enclosure.

The heat losses from the control section are evacuated by a fan in the enclosure door.

The incoming air temperature must be between 0 °C/*32 °F* and 40 °C/*104 °F* (-10 °C/*14 °F* with enclosure heating) and can reach +50 °C/*122 °F* with derating (class 3K3 according to IEC/EN 60721-3-3).

IP23 enclosures comprise:
1 An air intake (without filter mat) via a grid on the bottom of the enclosure door
2 A line reactor
3 Fans for the power section
4 A rectifier module
5 An inverter module
6 A dv/dt filter choke
7 An air outlet via a metal cover with protection against water splashes on the enclosure roof
8 An air outlet (without filter mat) with fans for the control section

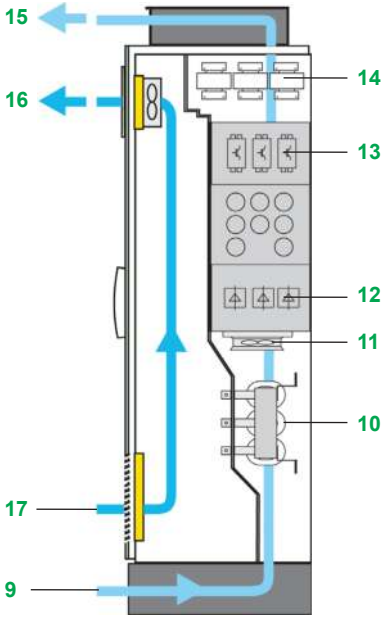

IP54 enclosure

Increased IP54 protection rating

With increased IP54 protection with separate channels, the cooling air intake comes from the floor and goes out through the enclosure roof.

The control section is cooled by filter fans located in the enclosure door.

The incoming air temperature must be between 0 °C/*32 °F* and 40 °C/*104 °F* (-10 °C/*14 °F* with enclosure heating) and can reach +50 °C/*122 °F* with derating (class 3K3 according to IEC/EN 60721-3-3).

IP54 enclosures comprise:
9 An air intake for the power section via the enclosure plinth
10 A line reactor
11 Fans for the power section
12 A rectifier module
13 An inverter module
14 A dv/dt filter choke
15 An air outlet via a metal cover with protection against water splashes on the enclosure roof
16 An air outlet (with filter mat) with fans for the control section
17 An air intake grid (with filter mat) for the control section

Variable speed drives
Altivar Process ATV900
High Performance Drive Systems

Additional enclosure allowing cabling from the bottom

Modular offer

This consists of:
- The standard High Performance offer
- One or more options (see pages 4/16 to 4/19)

Options (CTO)

Some of these options depend on the drive rating. They can be integrated without any need for modifications to the enclosure:
- Increased IP54 protection rating
- Enclosure plinth for basic device
- Additional enclosure allowing cabling from the top or from the bottom
- Enclosure lighting and heating
- "Local/remote" key switch
- Ethernet port on front door
- Extended I/O modules and extended relay modules
- Communication modules for various fieldbus systems
- Encoder interface modules
- STO - SIL 3 Stop category 0 or 1 Emergency stop
- Front display module (FDM)
- Indicator lights on front door
- Motor/bearing temperature monitoring
- dv/dt filters for long motor cables
- Motor heating
- Circuit breaker
- Undervoltage coil for circuit breaker
- Motor for circuit breaker
- Automated mains disconnect
- Setting for 415 V + 10%
- Safety labels in the local language
- Braking unit (BUO)

Further design variations (ETO)

These adaptations depend on the drive rating. Some may lead to modification of the size of the enclosure:
- Modified wiring colors
- Remote monitoring
- Different ranges of supply voltages
- Multipulse supply (12-pulse)
- Design without a main switch
- Increased short-circuit strength up to 100 kA
- Air intake from the back
- Other enclosure colors
- Customized documentation and labeling
- Motor contactor
- Etc.

Configure your drive system with the
Altivar Process Configurator Tool
altivar-process-configurator.schneider-electric.com

Variable speed drives

Altivar Process ATV900
High Performance Drive Systems
Three-phase supply voltage: 380...415 V 50/60 Hz

ATV960C16Q4X1

380...415 V IP23 High Performance Drive Systems								
Motor		Line supply			Altivar Process			
Power indicated on rating plate (1)		Line current (2)	Apparent power	Maximum prospective line Isc	Maximum continuous current (1)	Maximum transient current for	Reference (1)	Weight
		400 V	400 V			60 s		
ND:	Normal duty (3)							
HD:	*Heavy duty (4)*							
	kW	A	kVA	kA	A	A		kg/ *lb*
THDi ≤ 44% at 100% load								
ND	110	195	135	50	211	253	ATV960C11Q4X1	300/ *661*
HD	*90*	*164*	*113*	*50*	*173*	*260*		
ND	132	232	161	50	250	300	ATV960C13Q4X1	300/ *661*
HD	*110*	*197*	*136*	*50*	*211*	*317*		
ND	160	277	192	50	302	362	ATV960C16Q4X1	300/ *661*
HD	*132*	*232*	*161*	*50*	*250*	*375*		
ND	200	349	242	50	370	444	ATV960C20Q4X1	400/ *882*
HD	*160*	*286*	*198*	*50*	*302*	*453*		
ND	250	432	299	50	477	572	ATV960C25Q4X1	400/ *882*
HD	*200*	*353*	*244*	*50*	*370*	*555*		
ND	315	538	373	50	590	708	ATV960C31Q4X1	400/ *882*
HD	*250*	*432*	*299*	*50*	*477*	*716*		
ND	355	611	423	50	660	792	ATV960C35Q4X1	650/ *1,433*
HD	*280*	*489*	*339*	*50*	*520*	*780*		
ND	400	681	472	50	730	876	ATV960C40Q4X1	650/ *1,433*
HD	*315*	*545*	*378*	*50*	*590*	*885*		
ND	450	764	529	50	830	996	ATV960C45Q4X1	650/ *1,433*
HD	*355*	*611*	*423*	*50*	*660*	*990*		
ND	500	846	586	50	900	1,080	ATV960C50Q4X1	650/ *1,433*
HD	*400*	*681*	*472*	*50*	*730*	*1,095*		
ND	560	948	656	50	1,020	1,224	ATV960C56Q4X1	850/ *1,874*
HD	*450*	*767*	*531*	*50*	*830*	*1,245*		
ND	630	1,058	733	50	1,140	1,368	ATV960C63Q4X1	850/ *1,874*
HD	*500*	*849*	*588*	*50*	*900*	*1,350*		
ND	710	1,192	826	50	1,260	1,512	ATV960C71Q4X1	1,100/ *2,425*
HD	*560*	*951*	*659*	*50*	*1,020*	*1,530*		
ND	800	1,335	925	50	1,420	1,704	ATV960C80Q4X1	1,100/ *2,425*
HD	*630*	*1,061*	*735*	*50*	*1,140*	*1,710*		

(1) These values are given for a nominal switching frequency of 2.5 kHz for use in continuous operation.
The switching frequency is adjustable from 2…8 kHz for all ratings.
Above 2.5 kHz, the drive will automatically reduce the switching frequency in the event of an excessive temperature rise. For continuous operation above the nominal switching frequency, derate the nominal drive current (see the derating curves in the Handbook).
(2) Typical value for the indicated motor power and for the maximum prospective line Isc.
(3) Values given for applications requiring a slight overload (up to 120%).
(4) Values given for applications requiring a significant overload (up to 150% for 60 s).

Note: Consult the CTO options tables of possible combinations with the drives (see page 4/16).

Variable speed drives

Altivar Process ATV900
High Performance Drive Systems
Three-phase supply voltage: 480 V 50/60 Hz

ATV960C35T4X1

480 V IP23 High Performance Drive Systems

Motor		Line supply			Altivar Process			
Power indicated on rating plate (1)		Line current (2)	Apparent power	Maximum prospective line Isc	Maximum continuous current (1)	Maximum transient current for	Reference (1)	Weight
		480 V	480 V			60 s		
ND:	Normal duty (3)							
HD:	*Heavy duty (4)*							
	kW	A	kVA	kA	A	A		kg/ *lb*
THDi ≤ 44% at 100% load								
ND	132	196	163	50	211	253	ATV960C11T4X1	300/ *661*
HD	*110*	*168*	*139*	*50*	*173*	*260*		
ND	160	233	194	50	250	300	ATV960C13T4X1	300/ *661*
HD	*132*	*198*	*164*	*50*	*211*	*317*		
ND	180	258	194	50	302	362	ATV960C16T4X1	300/ *661*
HD	*160*	*233*	*215*	*50*	*250*	*375*		
ND	220	320	266	50	370	444	ATV960C20T4X1	400/ *882*
HD	*180*	*267*	*222*	*50*	*302*	*453*		
ND	280	400	333	50	477	572	ATV960C25T4X1	400/ *882*
HD	*220*	*323*	*268*	*50*	*370*	*555*		
ND	355	503	418	50	590	708	ATV960C31T4X1	400/ *882*
HD	*280*	*400*	*333*	*50*	*477*	*716*		
ND	400	572	475	50	660	792	ATV960C35T4X1	650/ *1,433*
HD	*315*	*456*	*379*	*50*	*520*	*780*		
ND	450	637	530	50	730	876	ATV960C40T4X1	650/ *1,433*
HD	*355*	*510*	*424*	*50*	*590*	*885*		
ND	500	706	587	50	830	996	ATV960C45T4X1	650/ *1,433*
HD	*400*	*572*	*475*	*50*	*660*	*990*		
ND	560	789	656	50	900	1,080	ATV960C50T4X1	650/ *1,433*
HD	*450*	*637*	*530*	*50*	*730*	*1,095*		
ND	630	888	739	50	1,020	1,224	ATV960C56T4X1	850/ *1,874*
HD	*500*	*711*	*591*	*50*	*830*	*1,245*		
ND	710	993	826	50	1,140	1,368	ATV960C63T4X1	850/ *1,874*
HD	*560*	*794*	*660*	*50*	*900*	*1,350*		
ND	800	1,119	931	50	1,260	1,512	ATV960C71T4X1	1,100/ *2,425*
HD	*630*	*893*	*742*	*50*	*1,020*	*1,530*		
ND	900	1,257	1,045	50	1,420	1,704	ATV960C80T4X1	1,100/ *2,425*
HD	*710*	*997*	*828*	*50*	*1,140*	*1,710*		

(1) These values are given for a nominal switching frequency of 2.5 kHz for use in continuous operation.
The switching frequency is adjustable from 2…8 kHz for all ratings.
Above 2.5 kHz, the drive will automatically reduce the switching frequency in the event of an excessive temperature rise. For continuous operation above the nominal switching frequency, derate the nominal drive current (see the derating curves in the Handbook).
(2) Typical value for the indicated motor power and for the maximum prospective line Isc.
(3) Values given for applications requiring a slight overload (up to 120%).
(4) Values given for applications requiring a significant overload (up to 150% for 60 s).

Note: Consult the CTO options tables of possible combinations with the drives (see page 4/16).

4

Variable speed drives
Altivar Process ATV900
Low Harmonic/Regen Drive Systems

ATV980C16Q4X1

Presentation

Concept

The ATV980 Regenerative Drive Systems help improve efficiency by feeding the drive energy back to the mains.

Schneider Electric has developed a concept based on a 3-level technology that reduces the total current distortion factor (THDi) to a value below 5% and allows energy to flow in both directions at the same time.

During the development of the enclosure system, special attention was paid to make installation and operation simple. The result is a ready-to-connect enclosure for drives for which generator operating states can occur. This provides a 4-quadrant drive solution with smooth changeover from motor operation to generator operation.

The modular system concept with more than 80 selectable options makes it possible to adapt the enclosure unit to individual requirements. The fully-tested, ready-to-connect enclosure allows quick drive installation and commissioning.

Standard equipment

The standard Regenerative offer contains 3-level active infeed modules as well as frequency inverter modules, filter components, semiconductor fuses, a main switch, a dv/dt filter to limit impact of dv/dt and overvoltages in the motor due to long cables, and spacious mains and motor bars for connecting the power cables.

The design is based on the ready-assembled Sarel ‘‘Spacial SF’’ enclosures with a graphic operating panel integrated in the enclosure door.

Inside the enclosure there is a spaciously designed control panel with the control components. Despite its compact dimensions, the enclosure has enough space for additional extensions and provides easy access for maintenance purposes.

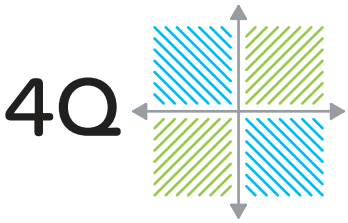

4-quadrant technology

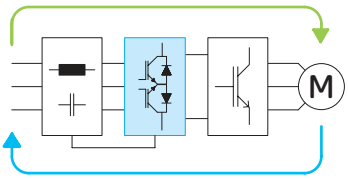

3-level technology

Device features

Simple use

ATV980 drives pilot and stop each motor without any additional effort. This 4-quadrant (4Q) technology is an ideal solution for drives for which generator operating states can occur. This avoids having complex multi-drive solutions.

Energy savings by highly efficient power regeneration

The 3-level technology inside the active mains rectifier and the dynamically adapted DC link voltage help to ensure an efficient flow of energy to and from the mains. ATV980 Drive Systems therefore help to save electrical energy.

Reduced load of the mains 3-level concept

In comparison with the conventional circuit structure of active mains rectifiers, the 3-level technology allows the switching frequency to increase and the current load to be reduced at the same time.

This new technology achieves a total distortion factor (THDi) below 2% and thus fulfills the requirements of the IEEE 519 standard. The THDi is below 5% for distorted mains.

Additionally, the cosinus Phi is equal to 1 in each load situation (from 30 % Pn), helping to reduce the the load on the mains.

Protection ratings

The standard design of the Altivar Process Regenerative Drive Systems complies with IP23 protection. This solution provides optimal cooling of the built-in frequency inverter modules and power components as well as maximum compactness.

For operation in harsh ambient conditions, increased IP54 protection is available as an option. This solution consists of a clearly specified and tested cooling system with a separate cooling air channel, which provides good reliability.

About 90% of the heat losses are evacuated via the separate cooling air channel. The inside of the enclosure is cooled via fans located in the enclosure door.

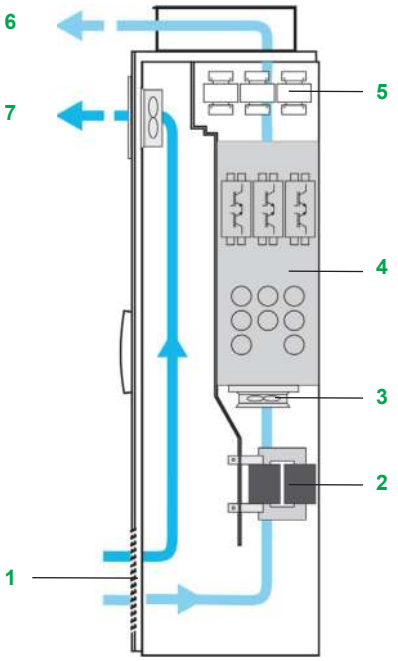

IP23 enclosure

Standard IP23 enclosure design

In order to avoid internal air short-circuits, the power sections of the components are located in the main cooling air channel.

The cooling air intake comes from a grid located in the bottom of the enclosure door. The internal fan, which is in a separate air channel, provides the cooling of the power section. The air then comes out through the top of the enclosure.

The heat losses from the control section are evacuated by a fan in the enclosure door.

The incoming air temperature must be between 0 °C/*32 °F* and 40 °C/*104 °F* (-10 °C/*14 °F* with enclosure heating) and can reach 50 °C/*122 °F* with derating (class 3K3 according to IEC/EN 60721-3-3).

IP23 enclosures comprise:
1 An air intake (without filter mat) via a grid on the bottom of the enclosure door
2 Filter components
3 Fans for the power section
4 An active front end (AFE) module
5 A dv/dt filter choke
6 An air outlet via a metal cover with protection against water splashes on the enclosure roof
7 An air outlet (without filter mat) with fans for the control section

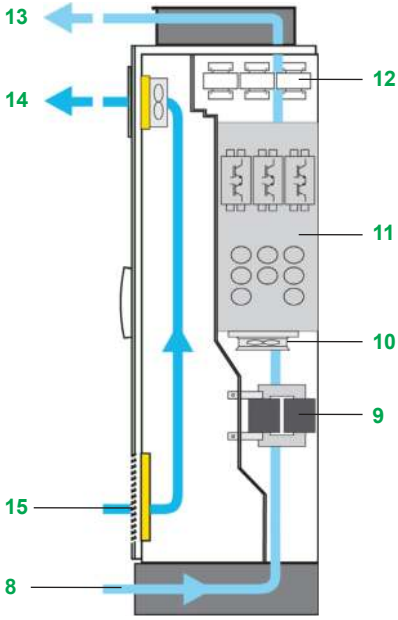

IP54 enclosure

Increased IP54 protection rating

With increased IP54 protection with separate channels, the cooling air intake comes from the floor and goes out through the enclosure roof.

The control section is cooled by filter fans located in the enclosure door.

The incoming air temperature must be between 0 °C/*32 °F* and 40 °C/*104 °F* (-10 °C/*14 °F* with enclosure heating) and can reach 50 °C/*122 °F* with derating (class 3K3 according to IEC/EN 60721-3-3).

IP54 enclosures comprise:
8 An air intake for the power section via the enclosure plinth
9 Filter components
10 Fans for the power section
11 An active front end (AFE) module
12 A dv/dt filter choke
13 An air outlet via a metal cover with protection against water splashes on the enclosure roof
14 An air outlet (with filter mat) with fans for the control section
15 An air intake grid (with filter mat) for the control section

Variable speed drives
Altivar Process ATV900
Low Harmonic/Regen Drive Systems

Enclosure heating

Modular offer

This consists of:
- The Low Harmonic/Regen Drive offer
- One or more options (see pages 4/16 to 4/19)

Options (CTO)

Some of these options depend on the drive rating. They can be integrated without any need for modifications to the enclosure:
- Increased IP54 protection rating
- Enclosure plinth for basic device
- Additional enclosure allowing cabling from the top or from the bottom
- Enclosure lighting and heating
- "Local/remote" key switch
- Ethernet port on front door
- Extended I/O modules and extended relay modules
- Communication modules for various fieldbus systems
- Encoder interface modules
- STO - SIL 3 Stop category 0 or 1 emergency stop
- Front display module (FDM)
- Indicator lights on front door
- Motor/bearing temperature monitoring
- dv/dt filters for long motor cables
- Motor heating
- Circuit breaker
- Undervoltage coil for circuit breaker
- Motor for circuit breaker
- Automated mains disconnect
- Setting for 415 V + 10%
- Safety information labels in the local language
- Braking unit (BUO)

Further design variations (ETO)

These adaptations depend on the drive rating. Some may lead to modification of the size of the enclosure:
- Modified wiring colors
- Remote monitoring
- Different ranges of supply voltages
- Design without a main switch
- Increased short-circuit strength up to100 kA
- Air intake from the back
- Other enclosure colors
- Customized documentation and labeling
- Motor contactor
- Etc.

Configure your drive system with the
Altivar Process Configurator Tool
altivar-process-configurator.schneider-electric.com

Variable speed drives

Altivar Process ATV900

Low Harmonic/Regen Drive Systems

Three-phase supply voltage: 380...415 V 50/60 Hz

ATV980C31Q4X1

4

380...415 V IP23 Low Harmonic/Regen Drive Systems

Motor		Line supply			Altivar Process			
Power indicated on rating plate (1)		Line current (2)	Apparent power	Maximum prospective line Isc	Maximum continuous current (1)	Maximum transient current for 60 s	Reference (1)	Weight
		400 V	400 V					
ND:	Normal duty (3)							
HD:	*Heavy duty (4)*							
	kW	A	kVA	kA	A	A		kg/ *lb*
THDi ≤ 5% at 100% load								
ND	110	175	121	50	211	253	ATV980C11Q4X1	400/ *882*
HD	*90*	*144*	*100*	*50*	*173*	*260*		
ND	132	208	144	50	250	300	ATV980C13Q4X1	400/ *882*
HD	*110*	*174*	*121*	*50*	*211*	*317*		
ND	160	252	174	50	302	362	ATV980C16Q4X1	400/ *882*
HD	*132*	*208*	*144*	*50*	*250*	*375*		
ND	200	313	217	50	370	444	ATV980C20Q4X1	700/ *1543*
HD	*160*	*252*	*174*	*50*	*302*	*453*		
ND	250	389	270	50	477	572	ATV980C25Q4X1	700/ *1,543*
HD	*200*	*313*	*217*	*50*	*370*	*555*		
ND	315	491	340	50	590	708	ATV980C31Q4X1	700/ *1,543*
HD	*250*	*389*	*270*	*50*	*477*	*716*		
ND	355	553	383	50	660	792	ATV980C35Q4X1	1,150/ *2,535*
HD	*280*	*436*	*302*	*50*	*520*	*780*		
ND	400	620	429	50	730	876	ATV980C40Q4X1	1,150/ *2,535*
HD	*315*	*491*	*340*	*50*	*590*	*885*		
ND	450	697	483	50	830	996	ATV980C45Q4X1	1,150/ *2,535*
HD	*355*	*553*	*383*	*50*	*660*	*990*		
ND	500	775	537	50	900	1080	ATV980C50Q4X1	1,150/ *2,535*
HD	*400*	*620*	*429*	*50*	*730*	*1095*		
ND	560	868	601	50	1020	1224	ATV980C56Q4X1	1,450/ *3,197*
HD	*450*	*697*	*483*	*50*	*830*	*1245*		
ND	630	971	673	50	1140	1368	ATV980C63Q4X1	1,450/ *3,197*
HD	*500*	*775*	*537*	*50*	*900*	*1350*		
ND	710	1094	758	50	1260	1512	ATV980C71Q4X1	1,950/ *4,299*
HD	*560*	*868*	*601*	*50*	*1020*	*1530*		
ND	800	1227	850	50	1420	1704	ATV980C80Q4X1	1,950/ *4,299*
HD	*630*	*971*	*673*	*50*	*1140*	*1710*		

(1) These values are given for a nominal switching frequency of 2.5 kHz for use in continuous operation. The switching frequency is adjustable from 2…8 kHz for all ratings. Above 2.5 kHz, the drive will automatically reduce the switching frequency in the event of an excessive temperature rise. For continuous operation above the nominal switching frequency, derate the nominal drive current (see the derating curves in the Handbook).
(2) Typical value for the indicated motor power and for the maximum prospective line Isc.
(3) Values given for applications requiring a slight overload (up to 120%).
(4) Values given for applications requiring a significant overload (up to 150% for 60 s)

Note: Consult the CTO options tables of possible combinations with the drives (see page 4/16).

Variable speed drives

Altivar Process ATV900

Low Harmonic/Regen Drive Systems

Three-phase supply voltage: 480 V 50/60 Hz

ATV980C35T4X1

480 V IP23 Low Harmonic/Regen Drive Systems

Motor		Line supply			Altivar Process			
Power indicated on rating plate (1)		Line current (2) 480 V	Apparent power 480 V	Maximum prospective line Isc	Maximum continuous current (1)	Maximum transient current for 60 s	Reference (1)	Weight
ND:	Normal duty (3)							
HD:	*Heavy duty (4)*							
	kW	A	kVA	kA	A	A		kg/ *lb*
THDi ≤ 5% at 100% load								
ND	132	175	145	50	211	253	ATV980C11T4X1	400/ *882*
HD	*110*	*147*	*123*	*50*	*173*	*260*		
ND	160	211	175	50	250	300	ATV980C13T4X1	400/ *882*
HD	*132*	*175*	*145*	*50*	*211*	*317*		
ND	180	236	196	50	302	362	ATV980C16T4X1	400/ *882*
HD	*160*	*211*	*175*	*50*	*250*	*375*		
ND	220	287	239	50	370	444	ATV980C20T4X1	700/ *1,543*
HD	*180*	*236*	*196*	*50*	*302*	*453*		
ND	280	363	302	50	477	572	ATV980C25T4X1	700/ *1,543*
HD	*220*	*287*	*239*	*50*	*370*	*555*		
ND	355	461	383	50	590	708	ATV980C31T4X1	700/ *1,543*
HD	*280*	*363*	*302*	*50*	*477*	*716*		
ND	400	519	432	50	660	792	ATV980C35T4X1	1,150/ *2,535*
HD	*315*	*409*	*340*	*50*	*520*	*780*		
ND	450	581	483	50	730	876	ATV980C40T4X1	1,150/ *2,535*
HD	*355*	*461*	*383*	*50*	*590*	*885*		
ND	500	646	537	50	830	996	ATV980C45T4X1	1,150/ *2,535*
HD	*400*	*519*	*432*	*50*	*660*	*990*		
ND	560	723	601	50	900	1080	ATV980C50T4X1	1,150/ *2,535*
HD	*450*	*581*	*483*	*50*	*730*	*1095*		
ND	630	813	676	50	1020	1224	ATV980C56T4X1	1,450/ *3,197*
HD	*500*	*646*	*537*	*50*	*830*	*1245*		
ND	710	912	758	50	1140	1368	ATV980C63T4X1	1,450/ *3,197*
HD	*560*	*723*	*601*	*50*	*900*	*1350*		
ND	800	1028	854	50	1260	1512	ATV980C71T4X1	1,950/ *4,299*
HD	*630*	*813*	*676*	*50*	*1020*	*1530*		
ND	900	1150	956	50	1420	1704	ATV980C80T4X1	1,950/ *4,299*
HD	*710*	*912*	*758*	*50*	*1140*	*1710*		

(1) These values are given for a nominal switching frequency of 2.5 kHz for use in continuous operation. The switching frequency is adjustable from 2…8 kHz for all ratings. Above 2.5 kHz, the drive will automatically reduce the switching frequency in the event of an excessive temperature rise. For continuous operation above the nominal switching frequency, derate the nominal drive current (see the derating curves in the Handbook).
(2) Typical value for the indicated motor power and for the maximum prospective line Isc.
(3) Values given for applications requiring a slight overload (up to 120%).
(4) Values given for applications requiring a significant overload (up to 150% for 60 s).

Note: Consult the CTO options tables of possible combinations with the drives (see page 4/16).

Variable speed drives

Altivar Process ATV900
Drive Systems
Common CTO options

VW3AP1601

VW3AP1502

Safety label

Common options *(1)*		
Description	**Reference**	**Weight kg/*lb***
Enclosure options		
Enclosure lighting *(2)*	VW3AP1601	0.500/ *1.102*
Control options		
"Local/remote" key switch	VW3AP1801	0.200/ *0.441*
Ethernet port on front door	VW3AP1807	0.200/ *0.441*
Additional I/O modules		
Extended I/O module	VW3AP3203	0.200/ *0.441*
Extended relay module	VW3AP3204	0.200/ *0.441*
Communication modules		
PROFIBUS DP fieldbus module	VW3AP3607	0.200/ *0.441*
CANopen daisy chain fieldbus module	VW3AP3608	0.200/ *0.441*
DeviceNet fieldbus module	VW3AP3609	0.200/ *0.441*
CANopen SUB-D9 fieldbus module	VW3AP3618	0.200/ *0.441*
CANopen fieldbus module with screw terminals	VW3AP3628	0.200/ *0.441*
PROFINET fieldbus module	VW3AP3627	0.200/ *0.441*
EtherCAT Daisy Chain fieldbus module	VW3AP3601	0.200/ *0.441*
Encoder interface modules		
Digital encoder interface module 5/12 V	VW3AP3420	0.150/ *0.331*
Analog encoder interface module	VW3AP3422	0.150/ *0.331*
Resolver encoder interface module	VW3AP3423	0.150/ *0.331*
HTL encoder interface module	VW3AP3424	0.150/ *0.331*
Safety functions		
Emergency stop button (STO) with SIL 3 stop category 0	VW3AP1502	0.200/ *0.441*
Emergency stop button (STO) with SIL 3 stop category 1	VW3AP1503	0.500/ *1.102*
Display options		
Indicator lights on front door	VW3AP0421	0.200/ *0.441*
Motor options		
PTC relay for motor monitoring	VW3AP2001	0.200/ *0.441*
PTC relay with ATEX certification for motor monitoring *(3)*	VW3AP2002	0.200/ *0.441*
PT100/1000/KTY relay for motor monitoring	VW3AP2003	0.200/ *0.441*
PT100/1000/KTY relay for bearing monitoring	VW3AP2004	0.200/ *0.441*
Motor heating	VW3AP2101	0.300/ *0.661*
Line supply		
Setting for 415 V + 10%	VW3AP0415	–
Ready for IT systems	VW3AP2701	–
Safety labels *(4)*		
English and German safety labels	VW3AP0561	–
English and Italian safety labels	VW3AP0562	–
English and Spanish safety labels	VW3AP0563	–
English and Dutch safety labels	VW3AP0564	–
English and Chinese safety labels	VW3AP0565	–
English and Russian safety labels	VW3AP0566	–
English and Turkish safety labels	VW3AP0567	–
English and Polish safety labels	VW3AP0568	–
English and Portuguese safety labels	VW3AP0569	–

(1) These options cannot be ordered alone. For any other configuration, please consult our Customer Care Teams.
(2) Not available for ATV960C11●4X1...C16●4X1.
(3) To make an installation compliant with the ATEX recommendations, please refer to the Installation Manual for each product.
(4) English and French as standard.

Variable speed drives

Altivar Process ATV900
Drive Systems
CTO options dependent on the drive rating

VW3AP0801

Options dependent on the drive rating (1)			
Description	**Corresponding enclosure (2)**	**Reference**	**Weight kg/lb**
Enclosure options			
Enclosure heating	ATV960C11●4X1...C16●4X1	VW3AP0501	1.500/ 3.307
	ATV960C20●4X1...C50●4X1	VW3AP0502	3.000/ 6.614
	ATV960C56●4X1...C80●4X1	VW3AP0503	4.500/ 9.921
	ATV980C11●4X1...C31●4X1	VW3AP0551	2.000/ 4.409
	ATV980C35●4X1...C80●4X1	VW3AP0552	3.000/ 6.614
Increased IP54 protection rating	ATV960C11●4X1...C16●4X1	VW3AP0301	13.000/ 28.660
	ATV960C20●4X1...C31●4X1	VW3AP0302	16.000/ 35.274
	ATV960C35●4X1...C50●4X1	VW3AP0303	19.000/ 41.888
	ATV960C56●4X1...C63●4X1	VW3AP0304	32.000/ 70.548
	ATV960C71●4X1...C80●4X1	VW3AP0305	35.000/ 77.162
	ATV980C11●4X1...C16●4X1	VW3AP0351	16.000/ 35.274
	ATV980C20●4X1...C31●4X1	VW3AP0352	29.000/ 63.934
	ATV980C35●4X1...C50●4X1	VW3AP0353	45.000/ 99.208
	ATV980C56●4X1...C63●4X1	VW3AP0354	58.000/ 127.668
	ATV980C71●4X1...C80●4X1	VW3AP0355	74.000/ 163.142
Enclosure plinth for basic device	ATV960C11●4X1...C16●4X1	VW3AP0801	9.000/ 19.842
	ATV960C20●4X1...C31●4X1	VW3AP0802	11.000/ 24.251
	ATV960C35●4X1...C50●4X1	VW3AP0803	13.000/ 28.660
	ATV960C56●4X1...C63●4X1	VW3AP0804	22.000/ 48.502
	ATV960C71●4X1...C80●4X1	VW3AP0805	24.000/ 52.911
	ATV980C11●4X1...C16●4X1	VW3AP0851	11.000/ 24.251
	ATV980C20●4X1...C31●4X1	VW3AP0852	20.000/ 44.093
	ATV980C35●4X1...C50●4X1	VW3AP0853	31.000/ 68.343
	ATV980C56●4X1...C63●4X1	VW3AP0854	40.000/ 88.185
	ATV980C71●4X1...C80●4X1	VW3AP0855	54.000/ 119.050

(1) These options cannot be ordered alone. For any other configuration, please consult our Customer Care Teams.
(2) Replace ● with Q for 380...415 V supply voltage or with T for 480 V supply voltage.

Variable speed drives

Altivar Process ATV900
Drive Systems
CTO options dependent on the drive rating

VW3AP0707

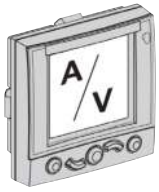

VW3AP0403

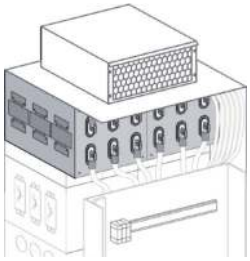

VW3AP0612

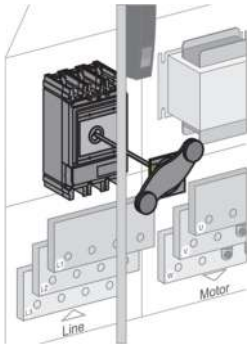

VW3AP0104

Options dependent on the drive rating (continued) (1)			
Description	**Corresponding enclosure** *(2)*	**Reference**	**Weight kg/*lb***
Enclosure options			
Additional enclosure allowing cabling from the top	ATV960C11●4X1...C31●4X1 ATV980C11●4X1...C31●4X1	VW3AP0701	85/ *187*
	ATV960C35●4X1...C80●4X1 ATV980C35●4X1...C80●4X1	VW3AP0702	100/ *220*
Additional enclosure allowing cabling from the top with plinth	ATV960C11●4X1...C31●4X1 ATV980C11●4X1...C31●4X1	VW3AP0704	94/ *207*
	ATV960C35●4X1...C80●4X1 ATV980C35●4X1...C80●4X1	VW3AP0705	111/ *245*
Additional enclosure allowing cabling from the bottom	ATV960C11●4X1...C31●4X1 ATV980C11●4X1...C31●4X1	VW3AP0707	85/ *187*
	ATV960C35●4X1...C80●4X1 ATV980C35●4X1...C80●4X1	VW3AP0708	100/ *220*
Additional enclosure allowing cabling from the bottom with plinth	ATV960C11●4X1...C31●4X1 ATV980C11●4X1...C31●4X1	VW3AP0710	94/ *207*
	ATV960C35●4X1...C80●4X1 ATV980C35●4X1...C80●4X1	VW3AP0711	111/ *245*
Display options			
Front display module (FDM)	ATV960C11●4X1...C13●4X1 ATV980C11●4X1...C13●4X1	VW3AP0401	0.500/ *1.102*
	ATV960C16●4X1...C20●4X1 ATV980C16●4X1...C20●4X1	VW3AP0402	0.500/ *1.102*
	ATV960C25●4X1...C31●4X1 ATV980C25●4X1...C31●4X1	VW3AP0403	0.500/ *1.102*
	ATV960C35●4X1...C50●4X1 ATV980C35●4X1...C50●4X1	VW3AP0404	0.500/ *1.102*
	ATV960C56●4X1...C80●4X1 ATV980C56●4X1...C80●4X1	VW3AP0405	0.500/ *1.102*
Motor options			
150 m/*492 ft* dv/dt filter choke	ATV960C11●4X1...C16●4X1 ATV980C11●4X1...C16●4X1	VW3AP0601	25.000/ *55.116*
	ATV960C20●4X1...C31●4X1	VW3AP0602	50.000/ *110.231*
300 m/*984 ft* dv/dt filter choke	ATV960C11●4X1...C16●4X1 ATV980C11●4X1...C16●4X1	VW3AP0611	28.000/ *61.729*
	ATV960C20●4X1...C31●4X1 ATV980C20●4X1...C31●4X1	VW3AP0612	56.000/ *123.459*
	ATV960C35●4X1...C50●4X1 ATV980C35●4X1...C50●4X1	VW3AP0613	84.000/ *185.188*
	ATV960C56●4X1...C63●4X1 ATV980C56●4X1...C63●4X1	VW3AP0614	112.000/ *246.918*
	ATV960C71●4X1...C80●4X1 ATV980C71●4X1...C80●4X1	VW3AP0615	140.000/ *308.647*
Line supply			
Circuit breaker	ATV960C11●4X1...C16●4X1 ATV980C11●4X1...C16●4X1	VW3AP0101	2.000/ *4.409*
	ATV960C20●4X1...C31●4X1 ATV980C20●4X1...C31●4X1	VW3AP0102	2.000/ *4.409*
	ATV960C35●4X1...C40●4X1 ATV980C35●4X1...C40●4X1	VW3AP0103	1.000/ *2.204*
	ATV960C45●4X1...C50●4X1 ATV980C45●4X1...C50●4X1	VW3AP0104	1.000/ *2.204*
	ATV960C56●4X1...C63●4X1 ATV980C56●4X1...C63●4X1	VW3AP0105	1.000/ *2.204*
	ATV960C71●4X1...C80●4X1 ATV980C71●4X1...C80●4X1	VW3AP0106	1.000/ *2.204*
Circuit breaker with MicroLogic	ATV960C11●4X1...C16●4X1 ATV980C11●4X1...C16●4X1	VW3AP0111	2.000/ *4.409*
	ATV960C20●4X1...C31●4X1 ATV980C20●4X1...C31●4X1	VW3AP0112	2.000/ *4.409*
	ATV960C35●4X1...C40●4X1 ATV980C35●4X1...C40●4X1	VW3AP0113	1.000/ *2.204*
	ATV960C45●4X1...C50●4X1 ATV980C45●4X1...C50●4X1	VW3AP0114	1.000/ *2.204*
	ATV960C56●4X1...C63●4X1 ATV980C56●4X1...C63●4X1	VW3AP0115	1.000/ *2.204*
	ATV960C71●4X1...C80●4X1 ATV980C71●4X1...C80●4X1	VW3AP0116	1.000/ *2.204*
Undervoltage coil for circuit breaker 230 V	ATV960C11●4X1...C31●4X1 ATV980C11●4X1...C31●4X1	VW3AP0201	0.100/ *0.220*
	ATV960C35●4X1...C80●4X1 ATV980C35●4X1...C80●4X1	VW3AP0202	0.100/ *0.220*

(1) These options cannot be ordered alone. For any other configuration, please consult our Customer Care Teams.
(2) Replace ● with Q for 380...415 V supply voltage or with T for 480 V supply voltage.

Variable speed drives

Altivar Process ATV900
Drive Systems
CTO options dependent on the drive rating

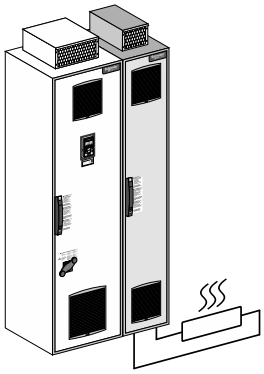

VW3AP1101

Options dependent on the drive rating (continued) (1)			
Description	**Corresponding enclosure** *(2)*	**Reference**	**Weight kg/*lb***
Line supply (continued)			
Motor for circuit breaker 230 V	ATV960C11●4X1...C31●4X1 ATV980C11●4X1...C31●4X1	VW3AP0251	4.000/ *8.818*
	ATV960C35●4X1...C40●4X1 ATV980C35●4X1...C40●4X1	VW3AP0252	4.000/ *8.818*
	ATV960C45●4X1...C50●4X1 ATV980C45●4X1...C50●4X1	VW3AP0253	7.000/ *15.432*
	ATV960C56●4X1...C63●4X1 ATV980C56●4X1...C63●4X1	VW3AP0254	7.000/ *15.432*
	ATV960C71●4X1...C80●4X1 ATV980C71●4X1...C80●4X1	VW3AP0255	7.000/ *15.432*
Automatic disconnect	ATV960C11●4X1...C16●4X1	VW3AP0271	0.500/ *1.102*
	ATV960C20●4X1...C31●4X1	VW3AP0272	0.500/ *1.102*
	ATV960C35●4X1...C40●4X1	VW3AP0273	0.500/ *1.102*
	ATV960C45●4X1...C50●4X1	VW3AP0274	0.500/ *1.102*
	ATV960C56●4X1...C63●4X1	VW3AP0275	0.500/ *1.102*
	ATV960C71●4X1...C80●4X1	VW3AP0276	0.500/ *1.102*
Braking unit			
Braking unit (BUO) (IP23)	ATV960C11●4X1...C16●4X1 ATV980C11●4X1...C16●4X2	VW3AP1101	260/ *573*
	ATV960C20●4X1...C31●4X1 ATV980C20●4X1...C31●4X2	VW3AP1102	260/ *573*
	ATV960C35●4X1...C50●4X1 ATV980C35●4X1...C50●4X2	VW3AP1103	510/ *1124*
	ATV960C56●4X1...C63●4X1 ATV980C56●4X1...C63●4X2	VW3AP1104	510/ *1124*
	ATV960C71●4X1...C80●4X1 ATV980C71●4X1...C80●4X2	VW3AP1105	510/ *1124*
Braking unit (BUO) (IP54 with plinth)	ATV960C11●4X1...C16●4X1 ATV980C11●4X1...C16●4X2	VW3AP1111	269/ *593*
	ATV960C20●4X1...C31●4X1 ATV980C20●4X1...C31●4X2	VW3AP1112	269/ *593*
	ATV960C35●4X1...C50●4X1 ATV980C35●4X1...C50●4X2	VW3AP1113	528/ *1164*
	ATV960C56●4X1...C63●4X1 ATV980C56●4X1...C63●4X2	VW3AP1114	528/ *1164*
	ATV960C71●4X1...C80●4X1 ATV980C71●4X1...C80●4X2	VW3AP1115	528/ *1164*
Braking unit (BUO) (IP23 with plinth)	ATV960C11●4X1...C16●4X1 ATV980C11●4X1...C16●4X2	VW3AP1121	269/ *593*
	ATV960C20●4X1...C31●4X1 ATV980C20●4X1...C31●4X2	VW3AP1122	269/ *593*
	ATV960C35●4X1...C50●4X1 ATV980C35●4X1...C50●4X2	VW3AP1123	528/ *1164*
	ATV960C56●4X1...C63●4X1 ATV980C56●4X1...C63●4X2	VW3AP1124	528/ *1164*
	ATV960C71●4X1...C80●4X1 ATV980C71●4X1...C80●4X2	VW3AP1125	528/ *1164*
Packaging			
Seaworthy packaging	ATV960C11●4X1...C16●4X1	VW3AP0811	105/ *231*
	ATV960C20●4X1...C31●4X1	VW3AP0812	124/ *273*
	ATV960C35●4X1...C50●4X1	VW3AP0813	138/ *304*
	ATV960C56●4X1...C63●4X1	VW3AP0815	192/ *423*
	ATV960C71●4X1...C80●4X1	VW3AP0816	205/ *452*
	ATV980C11●4X1...C16●4X1	VW3AP0812	124/ *273*
	ATV980C20●4X1...C31●4X1	VW3AP0814	155/ *342*
	ATV980C35●4X1...C50●4X1	VW3AP0817	225/ *496*
	ATV980C56●4X1...C63●4X1	VW3AP0819	255/ *562*
	ATV980C71●4X1...C80●4X1	VW3AP0821	352/ *776*

(1) These options cannot be ordered alone. For any other configuration, please consult our Customer Care Teams.
(2) Replace ● with Q for 380...415 V supply voltage or with T for 480 V supply voltage.

Variable speed drives

Altivar Process ATV900

IP23 Drive Systems: 380...415 V

380...415 V Compact IP23 Drive Systems		
Overall dimensions		
Reference	**W x H x D** *(1)*	
	mm	***in.***
ATV960C11Q4X1	400 x 2,150 x 664	*15.75 x 84.65 x 26.14*
ATV960C13Q4X1	400 x 2,150 x 664	*15.75 x 84.65 x 26.14*
ATV960C16Q4X1	400 x 2,150 x 664	*15.75 x 84.65 x 26.14*
ATV960C20Q4X1	600 x 2,150 x 664	*23.62 x 84.65 x 26.14*
ATV960C25Q4X1	600 x 2,150 x 664	*23.62 x 84.65 x 26.14*
ATV960C31Q4X1	600 x 2,150 x 664	*23.62 x 84.65 x 26.14*
ATV960C35Q4X1	800 x 2,150 x 664	*31.50 x 84.65 x 26.14*
ATV960C40Q4X1	800 x 2,150 x 664	*31.50 x 84.65 x 26.14*
ATV960C45Q4X1	800 x 2,150 x 664	*31.50 x 84.65 x 26.14*
ATV960C50Q4X1	800 x 2,150 x 664	*31.50 x 84.65 x 26.14*
ATV960C56Q4X1	1,200 x 2,150 x 664	*47.24 x 84.65 x 26.14*
ATV960C63Q4X1	1,200 x 2,150 x 664	*47.24 x 84.65 x 26.14*
ATV960C71Q4X1	1,400 x 2,150 x 664	*55.12 x 84.65 x 26.14*
ATV960C80Q4X1	1,400 x 2,150 x 664	*55.12 x 84.65 x 26.14*

(1) The total depth includes a door handle of 64 mm/2.54 in. The dimensions can differ depending on the chosen options. For further information, please consult our Customer Care Teams.

Variable speed drives

Altivar Process ATV900

IP23 Drive Systems: 380...415 V

380...415 V Low Harmonic/Regen IP23 Drive Systems		
Overall dimensions		
Reference	**W x H x D** *(1)*	
	mm	***in.***
ATV980C11Q4X1	600 x 2,150 x 664	*23.62 x 84.65 x 26.14*
ATV980C13Q4X1	600 x 2,150 x 664	*23.62 x 84.65 x 26.14*
ATV980C16Q4X1	600 x 2,150 x 664	*23.62 x 84.65 x 26.14*
ATV980C20Q4X1	1,000 x 2,150 x 664	*39.37 x 84.65 x 23.62*
ATV980C25Q4X1	1,000 x 2,150 x 664	*39.37 x 84.65 x 26.14*
ATV980C31Q4X1	1,000 x 2,150 x 664	*39.37 x 84.65 x 26.14*
ATV980C35Q4X1	1,600 x 2,150 x 664	*62.99 x 84.65 x 26.14*
ATV980C40Q4X1	1,600 x 2,150 x 664	*62.99 x 84.65 x 26.14*
ATV980C45Q4X1	1,600 x 2,150 x 664	*62.99 x 84.65 x 26.14*
ATV980C50Q4X1	1,600 x 2,150 x 664	*62.99 x 84.65 x 26.14*
ATV980C56Q4X1	2,000 x 2,150 x 664	*78.74 x 84.65 x 26.14*
ATV980C63Q4X1	2,000 x 2,150 x 664	*78.74 x 84.65 x 26.14*
ATV980C71Q4X1	2,600 x 2,150 x 664	*102.36 x 84.65 x 26.14*
ATV980C80Q4X1	2,600 x 2,150 x 664	*102.36 x 84.65 x 26.14*

(1) The total depth includes a door handle of 64 mm/2.54 in. The dimensions can differ depending on the chosen options. For further information, please consult our Customer Care Teams.

Contents

5 - Drives Field Services, index

Drives Field Services

- A whole world of services for your drives ..... page 5/2

Index

- Product reference index ..... page 5/4

5

Variable speed drives and soft starters

A whole world of Services for your drives and soft starters by Schneider Electric

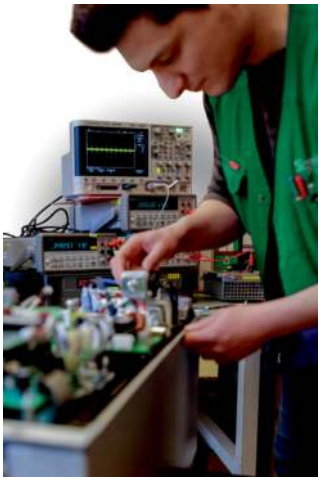

Support and services offer by Schneider Electric

Variable speed drives and soft starters are an important part of your operation, with downtime having a significant impact on your business. Protecting that investment through comprehensive services means that you can continue to deliver optimally throughout the lifecycle of your drive and soft starter. Our range of services is designed to help you get more out of your drives and soft starters, your operation, and to improve your environmental impact.

5

Install

- **Extended Warranty** service helps you control your maintenance costs. Schneider Electric will provide a replacement drive and soft starter or repair the product on site during a period of one or three years more than the standard warranty, in all conditions covered by the extended warranty.
- **Start-up** service is the first essential step in maintenance and optimal operational performance of the drive or soft starter. Our comprehensive review checks up to 100 parameters and is especially designed for drives and soft starters in simple applications.
- **Commissioning** service ensures a reliable start for operations with more complex applications and drive systems. The unique requirements of your process need to be carefully considered to ensure efficient operations.

Operate

- **Preventive Maintenance** service performs predetermined maintenance actions according to a product-specific schedule. The work is carried out by certified technical experts following Schneider Electric instructions. This service minimizes unplanned downtime and extends your equipment lifetime.
- **Remote Technical Support** brings you expert product assistance over the phone, email, chat, or web for any technical questions relating to your drives and soft starters, including configuration, diagnostics, and maintenance. Our global support team is multi-lingual with support available up to R&D level experts if needed.
- **On-Site Expert Assistance** service offers you highly skilled field service experts to troubleshoot and resolve drive or soft starter equipment-related matters at your site, as a back-up source of expertise for your personnel.
- **Spare Part Management** service identifies and manages your critical spare parts either on your site or offsite. This service ensures that you have access to the spares you need without having to invest in capital to maintain the stock.

(1) Services available in countries that have the right structure and capabilities.

Variable speed drives and soft starters

A whole world of Services for your drives and soft starters by Schneider Electric

Support and services offer by Schneider Electric (continued)

Optimize

- **Training** service offers eLearning, classroom, and onsite training provision to enhance the technical installation, commissioning, and maintenance competencies of your personnel. Added competence translates into further process efficiency and reliability, as well as employee satisfaction.

- **EcoStruxure Asset Advisor** service enables you to move from reactive to predictive maintenance and access actionable insight provided by the advisor. The service predicts drive- and motor-related actions through connected devices and advanced algorithms monitored by Schneider Electric's experts.

Renew

- **Drive Revitalization** is an excellent choice if you prefer to use your aging drives longer and want to extend their service life with affordable and comprehensive inspection and replacement of all critical parts.

- **Drive and soft starter replacement** involves modernizing equipment by replacing the previous aged or obsolete product with a new one matched to the purpose. The service can be extended with engineering in case the device and process requires more advanced engineering.

Circular economy

- **Spare Parts** are available from our local, regional, and global stocks. Original equipment parts from Schneider Electric are reliable and easily available. They will help to keep your product in operation for longer.

- **Repair** allows you to extend the life of your drive or soft starter. The affected product can be replaced, or repaired on site or at our repair centers, depending on the type of product in question.

- **Fast Exchange by refurbished drive or soft starter** *(1)* gives a second life to inoperative drives or soft starters. In this case, we offer an immediate exchange with a replacement refurbished drive or soft starter and take back the product, repair it, and keep it ready for the next exchange.

- **Take-back and recycling** *(1)* is the last step to improve your environmental impact. Unrepairable products are dismantled, raw materials are collected and given a second life. Up to 85% of the product components can be recycled.

Service contracts secure recovery, availability, and outcome

Service contracts manage the safety and performance of your assets through well-defined maintenance plans tailored to your operational needs. The predefined service contract – Advantage Service Plan – and fully customizable "à la carte" service contract are built from the services in the "Operate" and "Optimize" phases and service levels defining availability, response, and lead times matching your particular needs. You will enjoy priority access to Schneider Electric support when you need it, as well as having an expert partner to plan the long-term evolution of your drives and soft starters.

mySchneider app

With the mySchneider app you have easy 24/7 access to product information and expert support. All registered users have access to additional features, such as real-time notifications, order tracking, product pricing, and availability. The mySchneider app is available for download from the IOS and Android app store.

Schneider Electric – helping you succeed

Schneider Electric, the leader in digital transformation of energy management and automation, has operations in more than 100 countries. With this global footprint we have certified field service representatives, regional expert and advanced level support up to product R&D to provide you the right support across the lifecycle of your drives and soft starters. Furthermore, we offer an extensive network of local and global repair centers and a logistics chain that underpins our ability to respond to your needs.

To order services or find out more, please contact your local Schneider Electric service center.

(1) Services available in countries that have the right structure and capabilities.

Variable speed drives

Altivar Process ATV900

Product reference index

#

490NTC00005 2/32
490NTC00015 2/32
490NTW00002 2/32
490NTW00002U 2/32
490NTW00005 2/32
490NTW00005U 2/32
490NTW00012 2/32
490NTW00012U 2/32

A

ATV930C11N4 2/65 2/69 2/70 2/71
ATV930C11N4C 2/6 2/70
ATV930C11N4F 2/2 2/10 2/71
ATV930C13N4 2/6 2/69
ATV930C13N4C 2/6 2/70
ATV930C13N4F 2/10 2/71
ATV930C16N4 2/5 2/69
ATV930C16N4C 2/6 2/70
ATV930C16N4F 2/10 2/71
ATV930C20N4F 2/10 2/71
ATV930C22N4 2/5 2/63 2/65 2/69
ATV930C22N4C 2/6 2/70
ATV930C25N4C 2/6 2/63 2/65 2/70
ATV930C25N4F 2/10 2/71
ATV930C31N4C 2/6 2/63 2/65 2/70
ATV930C31N4F 2/10 2/71
ATV930D11M3 2/6 2/62 2/68
ATV930D11N4 2/5 2/63 2/65 2/69
ATV930D11N4Z 2/69 3/6
ATV930D11Y6 2/9 2/67 2/71
ATV930D15M3 2/4 2/62 2/68
ATV930D15N4 2/5 2/65 2/69
ATV930D15N4Z 2/69 3/6
ATV930D15Y6 2/9 2/20 2/71
ATV930D18M3 2/4 2/18 2/68
ATV930D18N4 2/5 2/18 2/69
ATV930D18N4Z 2/20 2/69 3/6
ATV930D18Y6 2/9 2/20 2/71
ATV930D22M3 2/4 2/18 2/68
ATV930D22N4 2/5 2/18 2/69
ATV930D22N4Z 2/20 2/69 3/6
ATV930D22Y6 2/9 2/20 2/71
ATV930D30M3 2/4 2/18 2/68
ATV930D30M3C 2/4 2/18 2/68
ATV930D30N4 2/5 2/18 2/69
ATV930D30N4Z 2/20 2/69 3/7
ATV930D30Y6 2/9 2/20 2/71
ATV930D37M3 2/4 2/18 2/68
ATV930D37M3C 2/4 2/18 2/68
ATV930D37N4 2/5 2/18 2/69
ATV930D37N4Z 2/20 2/69 3/7
ATV930D37Y6 2/9 2/20 2/71
ATV930D45M3 2/4 2/18 2/68
ATV930D45M3C 2/4 2/18 2/68
ATV930D45N4 2/5 2/18 2/69
ATV930D45N4Z 2/20 2/69 3/7
ATV930D45Y6 2/9 2/20 2/71
ATV930D55M3C 2/4 2/18 2/68
ATV930D55N4 2/5 2/18 2/69
ATV930D55N4C 2/6 2/18 2/70
ATV930D55N4Z 2/20 2/69 3/7
ATV930D55Y6 2/9 2/20 2/71
ATV930D75M3C 2/4 2/18 2/68
ATV930D75N4 2/5 2/18 2/69
ATV930D75N4C 2/6 2/18 2/70
ATV930D75N4Z 2/20 2/69 3/7
ATV930D75Y6 2/9 2/20 2/71
ATV930D90N4 2/5 2/18 2/69
ATV930D90N4C 2/6 2/18 2/70
ATV930D90N4Z 2/20 2/69 3/7
ATV930D90Y6 2/9 2/20 2/71
ATV930U07M3 2/4 2/18 2/68
ATV930U07N4 2/5 2/18 2/69
ATV930U07N4Z 2/20 2/69 3/6
ATV930U15M3 2/4 2/18 2/68
ATV930U15N4 2/5 2/18 2/69
ATV930U15N4Z 2/20 2/69 3/6
ATV930U22M3 2/4 2/18 2/68
ATV930U22N4 2/5 2/18 2/69
ATV930U22N4Z 2/20 2/69 3/6
ATV930U22Y6 2/9 2/20 2/71
ATV930U30M3 2/4 2/18 2/68
ATV930U30N4 2/5 2/18 2/69
ATV930U30N4Z 2/20 2/69 3/6
ATV930U30Y6 2/9 2/20 2/71
ATV930U40M3 2/4 2/18 2/68
ATV930U40N4 2/5 2/18 2/69
ATV930U40N4Z 2/20 2/69 3/6
ATV930U40Y6 2/9 2/20 2/71
ATV930U55M3 2/4 2/18 2/68
ATV930U55N4 2/5 2/18 2/69
ATV930U55N4Z 2/20 2/69 3/6
ATV930U55Y6 2/9 2/20 2/71
ATV930U75M3 2/4 2/18 2/68
ATV930U75N4 2/5 2/18 2/69
ATV930U75N4Z 2/20 2/69 3/6
ATV930U75Y6 2/9 2/20 2/71
ATV950C11N4F 2/2 2/11 2/72
ATV950C13N4F 2/11 2/72
ATV950C16N4F 2/11 2/72
ATV950C20N4F 2/11 2/72
ATV950C25N4F 2/11 2/72
ATV950C31N4F 2/11 2/72
ATV950D11N4 2/7 2/64 2/66 2/72
ATV950D11N4E 2/8 2/72
ATV950D15N4 2/7 2/64 2/66 2/72
ATV950D15N4E 2/8 2/72
ATV950D18N4 2/7 2/64 2/66 2/72
ATV950D18N4E 2/8 2/72
ATV950D22N4 2/7 2/64 2/66 2/72
ATV950D22N4E 2/8 2/72
ATV950D30N4 2/7 2/64 2/66 2/72
ATV950D30N4E 2/8 2/72
ATV950D37N4 2/7 2/64 2/66 2/72
ATV950D37N4E 2/8 2/72
ATV950D45N4 2/7 2/64 2/66 2/72
ATV950D45N4E 2/8 2/72
ATV950D55N4 2/7 2/64 2/66 2/72
ATV950D55N4E 2/8 2/72
ATV950D75N4 2/7 2/64 2/66 2/72
ATV950D75N4E 2/8 2/72
ATV950D90N4 2/7 2/64 2/66 2/72
ATV950D90N4E 2/8 2/72
ATV950U07N4 2/2 2/7 2/64 2/66 2/72
ATV950U07N4E 2/2 2/8 2/72
ATV950U15N4 2/7 2/64 2/66 2/72
ATV950U15N4E 2/8 2/72
ATV950U22N4 2/7 2/64 2/66 2/72
ATV950U22N4E 2/8 2/72

Variable speed drives

Altivar Process ATV900

Product reference index

ATV950U30N4 2/7 2/64 2/66 2/72
ATV950U30N4E 2/8 2/72
ATV950U40N4 2/7 2/64 2/66 2/72
ATV950U40N4E 2/8 2/72
ATV950U55N4 2/7 2/64 2/66 2/72
ATV950U55N4E 2/8 2/72
ATV950U75N4 2/7 2/64 2/66 2/72
ATV950U75N4E 2/8 2/72
ATV960C11Q4X1 4/8 4/20
ATV960C11T4X1 4/9
ATV960C13Q4X1 4/8 4/20
ATV960C13T4X1 4/9
ATV960C16Q4X1 4/8 4/20
ATV960C16T4X1 4/9
ATV960C20Q4X1 4/8 4/20
ATV960C20T4X1 4/9
ATV960C25Q4X1 4/8 4/20
ATV960C25T4X1 4/9
ATV960C31Q4X1 4/8 4/20
ATV960C31T4X1 4/9
ATV960C35Q4X1 4/8 4/20
ATV960C35T4X1 4/9
ATV960C40Q4X1 4/8 4/20
ATV960C40T4X1 4/9
ATV960C45Q4X1 4/8 4/20
ATV960C45T4X1 4/9
ATV960C50Q4X1 4/8 4/20
ATV960C50T4X1 4/9
ATV960C56Q4X1 4/8 4/20
ATV960C56T4X1 4/9
ATV960C63Q4X1 4/8 4/20
ATV960C63T4X1 4/9
ATV960C71Q4X1 4/8 4/20
ATV960C71T4X1 4/9
ATV960C80Q4X1 4/8 4/20
ATV960C80T4X1 4/9
ATV980C11Q4X1 4/14 4/21
ATV980C11T4X1 4/15
ATV980C13Q4X1 4/14 4/21
ATV980C13T4X1 4/15
ATV980C16Q4X1 4/14 4/21
ATV980C16T4X1 4/15
ATV980C20Q4X1 4/14 4/21
ATV980C20T4X1 4/15
ATV980C25Q4X1 4/14 4/21
ATV980C25T4X1 4/15
ATV980C31Q4X1 4/14 4/21
ATV980C31T4X1 4/15
ATV980C35Q4X1 4/14 4/21
ATV980C35T4X1 4/15
ATV980C40Q4X1 4/14 4/21
ATV980C40T4X1 4/15
ATV980C45Q4X1 4/14 4/21
ATV980C45T4X1 4/15
ATV980C50Q4X1 4/14 4/21
ATV980C50T4X1 4/15
ATV980C56Q4X1 4/14 4/21
ATV980C56T4X1 4/15
ATV980C63Q4X1 4/14 4/21
ATV980C63T4X1 4/15
ATV980C71Q4X1 4/14 4/21
ATV980C71T4X1 4/15
ATV980C80Q4X1 4/14 4/21
ATV980C80T4X1 4/15
ATV9A0C11N6 3/5 3/11 3/35
ATV9A0C11Q4 3/5 3/8 3/26
ATV9A0C11Q6 3/5 3/13 3/37
ATV9A0C11R4 3/5 3/9 3/29
ATV9A0C11T4 3/5 3/10 3/32
ATV9A0C11T6 3/5 3/12 3/36
ATV9A0C13N6 3/11 3/35
ATV9A0C13Q4 3/8 3/26
ATV9A0C13Q6 3/13 3/37
ATV9A0C13R4 3/9 3/29
ATV9A0C13T4 3/10 3/32
ATV9A0C13T6 3/12 3/36
ATV9A0C16N6 3/11 3/35
ATV9A0C16Q4 3/8 3/26
ATV9A0C16Q6 3/13 3/37
ATV9A0C16R4 3/9 3/29
ATV9A0C16T4 3/10 3/32
ATV9A0C16T6 3/12 3/36
ATV9A0C20N6 3/11 3/35
ATV9A0C20Q4 3/8 3/26
ATV9A0C20Q6 3/13 3/37
ATV9A0C20R4 3/9 3/29
ATV9A0C20T4 3/10 3/32
ATV9A0C20T6 3/12 3/36
ATV9A0C25N6 3/11 3/35
ATV9A0C25Q4 3/8 3/26
ATV9A0C25Q6 3/13 3/37
ATV9A0C25R4 3/9 3/29
ATV9A0C25T4 3/10 3/32
ATV9A0C25T6 3/12 3/36
ATV9A0C31N6 3/11 3/35
ATV9A0C31Q4 3/8 3/26
ATV9A0C31Q6 3/13 3/37
ATV9A0C31R4 3/9 3/29
ATV9A0C31T4 3/10 3/32
ATV9A0C31T6 3/12 3/36
ATV9A0C35Q4 3/8 3/26
ATV9A0C35R4 3/9 3/29
ATV9A0C35T4 3/10 3/32
ATV9A0C40N6 3/11 3/35
ATV9A0C40Q4 3/8 3/26
ATV9A0C40Q6 3/13 3/37
ATV9A0C40R4 3/9 3/29
ATV9A0C40T4 3/10 3/32
ATV9A0C40T6 3/12 3/36
ATV9A0C45Q4 3/8 3/26
ATV9A0C45R4 3/9 3/29
ATV9A0C45T4 3/10 3/32
ATV9A0C50N6 3/11 3/35
ATV9A0C50Q4 3/8 3/26
ATV9A0C50Q6 3/13 3/37
ATV9A0C50R4 3/9 3/29
ATV9A0C50T4 3/10 3/32
ATV9A0C50T6 3/12 3/36
ATV9A0C56Q4 3/8 3/26
ATV9A0C56R4 3/9 3/29
ATV9A0C56T4 3/10 3/32
ATV9A0C63N6 3/11 3/35
ATV9A0C63Q4 3/8 3/26
ATV9A0C63Q6 3/13 3/37
ATV9A0C63R4 3/9 3/29
ATV9A0C63T4 3/10 3/32
ATV9A0C63T6 3/12 3/36
ATV9A0C71Q4 3/8 3/26
ATV9A0C71R4 3/9 3/29
ATV9A0C71T4 3/10 3/32
ATV9A0C80N6 3/11 3/35
ATV9A0C80Q4 3/8 3/26
ATV9A0C80Q6 3/13 3/37
ATV9A0C80R4 3/9 3/29
ATV9A0C80T4 3/10 3/32
ATV9A0C80T6 3/12 3/36
ATV9A0M10N6 3/11 3/35
ATV9A0M10Q4 3/8 3/26
ATV9A0M10Q6 3/13 3/37
ATV9A0M10R4 3/9 3/29
ATV9A0M10T4 3/10 3/32
ATV9A0M10T6 3/12 3/36
ATV9A0M12N6 3/11 3/35
ATV9A0M12Q6 3/13 3/37
ATV9A0M12T6 3/12 3/36
ATV9B0C11N6 3/5 3/17
ATV9B0C11Q4 3/5 3/14 3/27
ATV9B0C11Q6 3/5 3/19
ATV9B0C11R4 3/5 3/15 3/30
ATV9B0C11T4 3/5 3/16 3/33
ATV9B0C11T6 3/5 3/18
ATV9B0C13N6 3/17
ATV9B0C13Q4 3/14 3/27
ATV9B0C13Q6 3/19
ATV9B0C13R4 3/15 3/30
ATV9B0C13T4 3/16 3/33
ATV9B0C13T6 3/18
ATV9B0C16N6 3/17
ATV9B0C16Q4 3/14 3/27
ATV9B0C16Q6 3/19
ATV9B0C16R4 3/15 3/30
ATV9B0C16T4 3/16 3/33
ATV9B0C16T6 3/18
ATV9B0C20N6 3/17
ATV9B0C20Q4 3/14 3/27
ATV9B0C20Q6 3/19
ATV9B0C20R4 3/15 3/30
ATV9B0C20T4 3/16 3/33
ATV9B0C20T6 3/18
ATV9B0C25N6 3/17
ATV9B0C25Q4 3/14 3/27
ATV9B0C25Q6 3/19
ATV9B0C25R4 3/15 3/30
ATV9B0C25T4 3/16 3/33
ATV9B0C25T6 3/18
ATV9B0C31N6 3/17
ATV9B0C31Q4 3/14 3/27
ATV9B0C31Q6 3/19
ATV9B0C31R4 3/15 3/30
ATV9B0C31T4 3/16 3/33
ATV9B0C31T6 3/18
ATV9B0C35Q4 3/14 3/27
ATV9B0C35R4 3/15 3/30
ATV9B0C35T4 3/16 3/33
ATV9B0C40N6 3/17
ATV9B0C40Q4 3/14 3/27
ATV9B0C40Q6 3/19

ATV9B0C40R4 3/15 3/30
ATV9B0C40T4 3/16 3/33
ATV9B0C40T6 3/18
ATV9B0C45Q4 3/14 3/27
ATV9B0C45R4 3/15 3/30
ATV9B0C45T4 3/16 3/33
ATV9B0C50N6 3/17
ATV9B0C50Q4 3/14 3/27
ATV9B0C50Q6 3/19
ATV9B0C50R4 3/15 3/30
ATV9B0C50T4 3/16 3/33
ATV9B0C50T6 3/18
ATV9B0C56Q4 3/14 3/27
ATV9B0C56R4 3/15 3/30
ATV9B0C56T4 3/16 3/33
ATV9B0C63N6 3/17
ATV9B0C63Q4 3/14 3/27
ATV9B0C63Q6 3/19
ATV9B0C63R4 3/15 3/30
ATV9B0C63T4 3/16 3/33
ATV9B0C63T6 3/18
ATV9B0C71Q4 3/14 3/27
ATV9B0C71R4 3/15 3/30
ATV9B0C71T4 3/16 3/33
ATV9B0C80N6 3/17
ATV9B0C80Q4 3/14 3/27
ATV9B0C80Q6 3/19
ATV9B0C80R4 3/15 3/30
ATV9B0C80T4 3/16 3/33
ATV9B0C80T6 3/18
ATV9B0M10N6 3/17
ATV9B0M10Q6 3/19
ATV9B0M10T6 3/18
ATV9B0M12N6 3/17
ATV9B0M12Q6 3/19
ATV9B0M12T6 3/18
ATV9L0C13Q4 3/5 3/20 3/28
ATV9L0C13R4 3/5 3/21 3/31
ATV9L0C13T4 3/5 3/22 3/34
ATV9L0C16Q4 3/20 3/28
ATV9L0C16R4 3/21 3/31
ATV9L0C16T4 3/22 3/34
ATV9L0C20N6 3/5 3/23 3/35
ATV9L0C20Q4 3/20 3/28
ATV9L0C20Q6 3/5 3/25 3/37
ATV9L0C20R4 3/21 3/31
ATV9L0C20T4 3/22 3/34
ATV9L0C20T6 3/5 3/24 3/36
ATV9L0C25Q4 3/20 3/28
ATV9L0C25R4 3/21 3/31
ATV9L0C25T4 3/22 3/34
ATV9L0C28N6 3/23 3/35
ATV9L0C28Q6 3/25 3/37
ATV9L0C28T6 3/24 3/36
ATV9L0C31N6 3/23 3/35
ATV9L0C31Q4 3/20 3/28
ATV9L0C31Q6 3/25 3/37
ATV9L0C31R4 3/21 3/31
ATV9L0C31T4 3/22 3/34
ATV9L0C31T6 3/24 3/36
ATV9L0C40N6 3/23 3/35
ATV9L0C40Q4 3/20 3/28
ATV9L0C40Q6 3/25 3/37
ATV9L0C40R4 3/21 3/31
ATV9L0C40T4 3/22 3/34
ATV9L0C40T6 3/24 3/36
ATV9L0C45N6 3/23 3/35
ATV9L0C45Q6 3/25 3/37
ATV9L0C45T6 3/24 3/36
ATV9L0C50Q4 3/20 3/28
ATV9L0C50R4 3/21 3/31
ATV9L0C50T4 3/22 3/34
ATV9L0C56N6 3/23 3/35
ATV9L0C56Q6 3/25 3/37
ATV9L0C56T6 3/24 3/36
ATV9L0C63Q4 3/20 3/28
ATV9L0C63R4 3/21 3/31
ATV9L0C63T4 3/22 3/34
ATV9L0C71N6 3/23 3/35
ATV9L0C71Q6 3/25 3/37
ATV9L0C71T6 3/24 3/36
ATV9L0C80Q4 3/20 3/28
ATV9L0C80R4 3/21 3/31
ATV9L0C80T4 3/22 3/34
ATV9L0C90N6 3/23 3/35
ATV9L0C90Q4 3/20 3/28
ATV9L0C90Q6 3/25 3/37
ATV9L0C90R4 3/21 3/31
ATV9L0C90T4 3/22 3/34
ATV9L0C90T6 3/24 3/36
ATV9L0M10Q4 3/20 3/28
ATV9L0M10R4 3/21 3/31
ATV9L0M10T4 3/22 3/34
ATV9L0M12N6 3/23 3/35
ATV9L0M12Q4 3/20 3/28
ATV9L0M12Q6 3/25 3/37
ATV9L0M12R4 3/21 3/31
ATV9L0M12T4 3/22 3/34
ATV9L0M12T6 3/24 3/36
ATV9L0M14N6 3/23 3/35
ATV9L0M14Q6 3/25 3/37
ATV9L0M14T6 3/24 3/36
ATV9L0M15Q4 3/20 3/28
ATV9L0M15R4 3/21 3/31
ATV9L0M15T4 3/22 3/34
ATV9L0M16N6 3/23 3/35
ATV9L0M16Q6 3/25 3/37
ATV9L0M16T6 3/24 3/36
ATV9L0M18N6 3/23 3/35
ATV9L0M18Q4 3/20 3/28
ATV9L0M18Q6 3/25 3/37
ATV9L0M18R4 3/21 3/31
ATV9L0M18T4 3/22 3/34
ATV9L0M18T6 3/24 3/36
ATV9L0M22N6 3/23 3/35
ATV9L0M22Q6 3/25 3/37
ATV9L0M22T6 3/24 3/36
ATV9L0M26N6 3/23 3/35
ATV9L0M26Q6 3/25 3/37
ATV9L0M26T6 3/24 3/36
ATVRD15N4 2/61 2/77
ATVRU75N4 2/61 2/77

L

LU9AD7 2/35
LU9GC3 2/15 2/32

M

MODBUOC16Q4APM 3/26 3/27 3/28
MODBUOC16R4APM 3/29 3/30 3/31
MODBUOC16T4APM 3/32 3/33 3/34
MODBUOC20N6APM 3/35
MODBUOC20Q6APM 3/37
MODBUOC20T6APM 3/36
MODBUOC31Q4APM 3/26 3/27 3/28
MODBUOC31R4APM 3/29 3/30 3/31
MODBUOC31T4APM 3/32 3/33 3/34
MODBUOC40N6APM 3/35
MODBUOC40Q6APM 3/37
MODBUOC40T6APM 3/36
MODBUOC50Q4APM 3/26 3/27 3/28
MODBUOC50R4APM 3/29 3/30 3/31
MODBUOC50T4APM 3/32 3/33 3/34
MODBUOC63N6APM 3/35
MODBUOC63Q4APM 3/26 3/28
MODBUOC63Q6APM 3/37
MODBUOC63R4APM 3/29 3/31
MODBUOC63T4APM 3/32 3/34
MODBUOC63T6APM 3/36
MODBUOC80N6APM 3/35
MODBUOC80Q4APM 3/26 3/28
MODBUOC80Q6APM 3/37
MODBUOC80R4APM 3/29 3/31
MODBUOC80T4APM 3/32 3/34
MODBUOC80T6APM 3/36
MODBUOM10N6APM 3/35
MODBUOM10Q6APM 3/37
MODBUOM10T6APM 3/36
MODBUOM12N6APM 3/35
MODBUOM12Q6APM 3/37
MODBUOM12T6APM 3/36

N

NSYCAF223 2/12
NSYCAF291 2/12
NSYPTDS1 2/13
NSYPTDS2 2/13
NSYPTDS3 2/13
NSYPTDS4 2/13
NSYPTDS5 2/13

T

TCSCAR013M120 2/33
TCSCAR01NM120 2/34
TCSEGWB131W 2/14
TCSXCNAMUM3P 2/15
TSXCANCA100 2/33
TSXCANCA300 2/33
TSXCANCA50 2/33
TSXCANCADD03 2/34
TSXCANCADD1 2/34
TSXCANCB100 2/33
TSXCANCB300 2/33
TSXCANCB50 2/33
TSXCANCBDD3 2/34
TSXCANCBDD5 2/34
TSXCANCD100 2/33
TSXCANCD300 2/33
TSXCANCD50 2/33
TSXCANKCDF180T 2/33
TSXCANTDM4 2/34

V

VW3A1104R10 2/15
VW3A1104R100 2/15
VW3A1104R30 2/15
VW3A1104R50 2/15
VW3A1111 2/14
VW3A1112 2/15
VW3A1115 2/15
VW3A1116 2/15
VW3A3203 2/24 2/29
VW3A3204 2/24 2/29
VW3A3420 2/24 2/28
VW3A3422 2/24 2/28
VW3A3423 2/24 2/28
VW3A3424 2/24 2/28

VW3A3601 2/24 2/35
VW3A3607 2/24 2/35
VW3A3608 2/24 2/33
VW3A3609 2/24 2/35
VW3A3618 2/24 2/33
VW3A3619 2/24 2/35
VW3A3627 2/24 2/35
VW3A3628 2/24 2/34
VW3A3800 2/27
VW3A3802 2/24 2/25 2/27
VW3A3809 2/24 2/26 2/27
VW3A4411 2/51 2/76
VW3A4551 2/52 2/76
VW3A4552 2/52 2/76
VW3A4553 2/52 2/76
VW3A4554 2/52 2/76
VW3A4555 2/52 2/76
VW3A4556 2/52 2/76
VW3A46101 2/44 2/74
VW3A46102 2/44 2/74
VW3A46103 2/44 2/74
VW3A46104 2/44 2/74
VW3A46105 2/44 2/74
VW3A46106 2/44 2/74
VW3A46107 2/44 2/74
VW3A46108 2/44 2/74
VW3A46109 2/44 2/74
VW3A46110 2/44 2/74
VW3A46111 2/44 2/74
VW3A46112 2/44 2/74
VW3A46113 2/44 2/74
VW3A46114 2/45 2/74
VW3A46115 2/45 2/74
VW3A46116 2/45 2/74
VW3A46118 2/45 2/74
VW3A46119 2/45 2/74
VW3A46120 2/46 2/74
VW3A46121 2/46 2/74
VW3A46122 2/46 2/74
VW3A46123 2/46 2/74
VW3A46124 2/46 2/74
VW3A46125 2/46 2/74
VW3A46126 2/46 2/74
VW3A46127 2/46 2/74
VW3A46128 2/46 2/74
VW3A46129 2/46 2/74
VW3A46130 2/46 2/74
VW3A46131 2/46 2/74
VW3A46132 2/46 2/74
VW3A46133 2/47 2/74
VW3A46134 2/47 2/74
VW3A46135 2/47 2/74
VW3A46137 2/47 2/74
VW3A46138 2/47 2/74
VW3A46139 2/48 2/74
VW3A46140 2/48 2/74
VW3A46141 2/48 2/74
VW3A46142 2/48 2/74
VW3A46143 2/48 2/74
VW3A46144 2/48 2/74
VW3A46145 2/48 2/74
VW3A46146 2/48 2/74
VW3A46147 2/48 2/74
VW3A46148 2/48 2/74
VW3A46149 2/48 2/74
VW3A46150 2/48 2/74
VW3A46151 2/48 2/75
VW3A46152 2/48 2/75
VW3A46153 2/48 2/75
VW3A46154 2/48 2/75
VW3A46155 2/48 2/75
VW3A46157 2/48 2/75
VW3A46158 2/48 2/75
VW3A46159 2/48 2/75
VW3A46160 2/49 2/75
VW3A46161 2/49 2/75
VW3A46162 2/49 2/75
VW3A46163 2/49 2/75
VW3A46164 2/49 2/75
VW3A46165 2/49 2/75
VW3A46166 2/49 2/75
VW3A46167 2/49 2/75
VW3A46168 2/49 2/75
VW3A46169 2/49 2/75
VW3A46170 2/49 2/75
VW3A46171 2/49 2/75
VW3A46172 2/49 2/75
VW3A46173 2/49 2/75
VW3A46174 2/49 2/75
VW3A46176 2/49 2/75
VW3A4701 2/50 2/51 2/76
VW3A4702 2/50 2/51 2/76
VW3A4703 2/50 2/51 2/76
VW3A4704 2/50 2/51 2/76
VW3A4705 2/50 2/51 2/76
VW3A4706 2/50 2/51 2/76
VW3A4707 2/50 2/51 2/76
VW3A4708 2/50 2/51 2/76
VW3A4709 2/50 2/51 2/76
VW3A4710 2/50 2/51 2/76
VW3A47801 3/7
VW3A47802 3/7
VW3A47803 3/7
VW3A47804 3/7
VW3A47805 3/7
VW3A47901 2/51
VW3A47902 2/51
VW3A47903 2/51
VW3A47904 2/51
VW3A47905 2/51
VW3A47906 2/51
VW3A47907 2/51
VW3A47908 2/51
VW3A5103 2/54 2/76
VW3A5104 2/54 2/76
VW3A5106 2/54 2/76
VW3A5107 2/54 2/76
VW3A5209 2/57 2/77
VW3A5210 2/57 2/77
VW3A5215 2/57 2/77
VW3A5216 2/57 2/77
VW3A5217 2/57 2/77
VW3A5218 2/57 2/77
VW3A5219 2/57 2/77
VW3A5301 2/53 2/54 2/76
VW3A5302 2/53 2/54 2/76
VW3A5303 2/53 2/54 2/76
VW3A5304 2/53 2/54 2/76
VW3A5305 2/53 2/54 2/76
VW3A5306 2/53 2/54 2/76
VW3A5307 2/53 2/54 2/76
VW3A53901 2/57
VW3A53902 2/55 2/57
VW3A53903 2/55 2/57
VW3A53904 2/57
VW3A53905 2/55
VW3A5401 2/56 2/57 2/77
VW3A5402 2/56 2/57 2/77
VW3A5403 2/56 2/57 2/77
VW3A5404 2/56 2/57 2/77
VW3A5405 2/56 2/57 2/77
VW3A5406 2/56 2/57 2/77
VW3A5407 2/56 2/57 2/77
VW3A7101 2/36 2/73
VW3A7102 2/73
VW3A7105 2/36 2/73
VW3A7106 2/36 2/73
VW3A7730 2/38 2/39 2/40 2/73
VW3A7731 2/38 2/39 2/40 2/73
VW3A7732 2/38 2/39 2/40 2/73
VW3A7733 2/38 2/39 2/40 2/73
VW3A7734 2/38 2/39 2/40 2/73
VW3A7735 2/38 2/39 2/40 2/73
VW3A7736 2/38 2/39 2/40 2/73
VW3A7737 2/38 2/39 2/40 2/73
VW3A7738 2/38 2/39 2/40 2/73
VW3A7740 2/40 2/41 2/42 2/73
VW3A7741 2/40 2/41 2/42 2/73
VW3A7742 2/40 2/41 2/42 2/73

VW3A7743 2/40 2/41 2/42 2/73
VW3A7744 2/40 2/41 2/42 2/73
VW3A7745 2/40 2/41 2/73
VW3A7746 2/40 2/41 2/42 2/73
VW3A7747 2/40 2/73
VW3A7748 2/38 2/40 2/73
VW3A7750 2/42 2/43 2/73
VW3A7751 2/42 2/43 2/73
VW3A7752 2/42 2/43 2/73
VW3A7753 2/42 2/43 2/73
VW3A7754 2/42 2/43 2/73
VW3A7755 2/42 2/43 2/73
VW3A7756 2/42 2/43 2/73
VW3A7757 2/40 2/73
VW3A8306R03 2/15 2/32
VW3A8306R10 2/15 2/32
VW3A8306R30 2/15 2/32
VW3A8306RC 2/15 2/32
VW3A8306TF03 2/15 2/32
VW3A8306TF10 2/15 2/32
VW3A9112 2/13
VW3A9113 2/13
VW3A9114 2/13
VW3A9212 2/13
VW3A9213 2/13
VW3A93111 2/52
VW3A93112 2/52
VW3A93113 2/52
VW3A93114 2/52
VW3A93115 2/52
VW3A93116 2/52
VW3A93117 2/52
VW3A93118 2/52
VW3A93119 2/52
VW3A93120 2/52
VW3A95116 2/13
VW3A95117 2/13
VW3A95118 2/13
VW3A9513 2/13
VW3A9514 2/13
VW3A9515 2/13
VW3A9704 2/13
VW3A9705 2/13
VW3A9706 2/13
VW3AP0101 4/18
VW3AP0102 4/18
VW3AP0103 4/18
VW3AP0104 4/18
VW3AP0105 4/18
VW3AP0106 4/18
VW3AP0111 4/18
VW3AP0112 4/18
VW3AP0113 4/18
VW3AP0114 4/18
VW3AP0115 4/18
VW3AP0116 4/18
VW3AP0201 4/18
VW3AP0202 4/18
VW3AP0251 4/19
VW3AP0252 4/19
VW3AP0253 4/19
VW3AP0254 4/19
VW3AP0255 4/19
VW3AP0271 4/19
VW3AP0272 4/19
VW3AP0273 4/19
VW3AP0274 4/19
VW3AP0275 4/19
VW3AP0276 4/19
VW3AP0301 4/17
VW3AP0302 4/17
VW3AP0303 4/17
VW3AP0304 4/17
VW3AP0305 4/17
VW3AP0351 4/17
VW3AP0352 4/17
VW3AP0353 4/17
VW3AP0354 4/17
VW3AP0355 4/17
VW3AP0401 4/18
VW3AP0402 4/18
VW3AP0403 4/18
VW3AP0404 4/18
VW3AP0405 4/18
VW3AP0415 4/16
VW3AP0421 4/16
VW3AP0501 4/17
VW3AP0502 4/17
VW3AP0503 4/17
VW3AP0551 4/17
VW3AP0552 4/17
VW3AP0561 4/16
VW3AP0562 4/16
VW3AP0563 4/16
VW3AP0564 4/16
VW3AP0565 4/16
VW3AP0566 4/16
VW3AP0567 4/16
VW3AP0568 4/16
VW3AP0569 4/16
VW3AP0601 4/18
VW3AP0602 4/18
VW3AP0611 4/18
VW3AP0612 4/18
VW3AP0613 4/18
VW3AP0614 4/18
VW3AP0615 4/18
VW3AP0701 4/18
VW3AP0702 4/18
VW3AP0704 4/18
VW3AP0705 4/18
VW3AP0707 4/18
VW3AP0708 4/18
VW3AP0710 4/18
VW3AP0711 4/18
VW3AP0801 4/17
VW3AP0802 4/17
VW3AP0803 4/17
VW3AP0804 4/17
VW3AP0805 4/17
VW3AP0811 4/19
VW3AP0812 4/19
VW3AP0813 4/19
VW3AP0814 4/19
VW3AP0815 4/19
VW3AP0816 4/19
VW3AP0817 4/19
VW3AP0819 4/19
VW3AP0821 4/19
VW3AP0851 4/17
VW3AP0852 4/17
VW3AP0853 4/17
VW3AP0854 4/17
VW3AP0855 4/17
VW3AP1101 4/19
VW3AP1102 4/19
VW3AP1103 4/19
VW3AP1104 4/19
VW3AP1105 4/19
VW3AP1111 4/19
VW3AP1112 4/19
VW3AP1113 4/19
VW3AP1114 4/19
VW3AP1115 4/19
VW3AP1121 4/19
VW3AP1122 4/19
VW3AP1123 4/19
VW3AP1124 4/19
VW3AP1125 4/19
VW3AP1502 4/16
VW3AP1503 4/16
VW3AP1601 4/16
VW3AP1801 4/16
VW3AP1807 4/16
VW3AP2001 4/16
VW3AP2002 4/16
VW3AP2003 4/16
VW3AP2004 4/16
VW3AP2101 4/16
VW3AP2701 4/16
VW3AP3203 4/16
VW3AP3204 4/16
VW3AP3420 4/16
VW3AP3422 4/16
VW3AP3423 4/16
VW3AP3424 4/16
VW3AP3601 4/16
VW3AP3607 4/16
VW3AP3608 4/16
VW3AP3609 4/16
VW3AP3618 4/16
VW3AP3627 4/16
VW3AP3628 4/16
VW3CANCARR03 2/33
VW3CANCARR1 2/33
VW3CANTAP2 2/34
VW3M4701 2/28 2/35
VW3M8801R30 2/25
VW3M8802R15 2/25
VW3M8802R30 2/25
VW3M8810 2/25
VW3M8820 2/25
VX5VP50A001 2/12
VX5VP50BC001 2/12
VX5VPM001 2/12
VX5VPM002 2/12
VX5VPS1001 2/12
VX5VPS2001 2/12
VX5VPS3001 2/12
VX5VPS3002 2/12
VX5VPS4001 2/12
VX5VPS5001 2/12
VX5VPS5002 2/12
VX5VPS6001 2/12
VZ3V1212 2/12
VZ3V1213 2/12

Z

ZB5AZ905 2/15

Life Is On | Schneider Electric

Learn more about our products at
www.se.com

The information provided in this documentation contains general descriptions and/or technical characteristics of the performance of the products contained herein. This documentation is not intended as a substitute for and is not to be used for determining suitability or reliability of these products for specific user applications. It is the duty of any such user or integrator to perform the appropriate and complete risk analysis, evaluation and testing of the products with respect to the relevant specific application or use thereof. Neither Schneider Electric nor any of its affiliates or subsidiaries shall be responsible or liable for misuse of the information contained herein.

Design: Schneider Electric
Photos: Schneider Electric

Schneider Electric Industries SAS
Head Office
35, rue Joseph Monier - CS 30323
F-92500 Rueil-Malmaison Cedex
France

DIA2ED2150601EN
April 2023 - V12.0