Catalog | August 2021

Altivar Process ATV600

Variable speed drives

www.se.com

Life Is On | Schneider Electric

Quick access to product information

Get technical information about your product

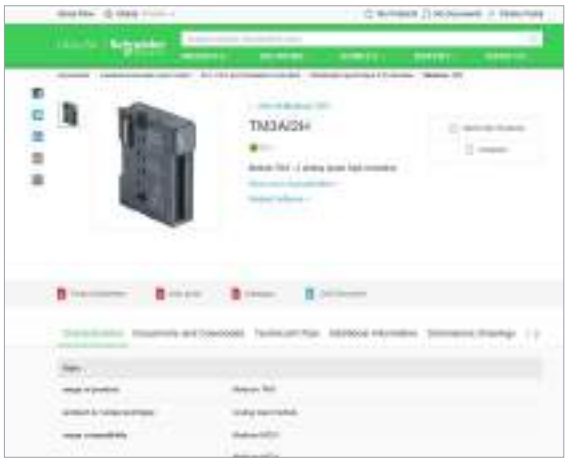

Each commercial reference presented in a catalog contains a hyperlink. Click on it to obtain the technical information of the product:

- Characteristics, Dimensions and drawings, Mounting and clearance, Connections and schemas, Performance curves
- Product image, Instruction sheet, User guide, Product certifications, End of life manual

Find your catalog

> With just 3 clicks, you can access the Industrial Automation and Control catalogs, in both English and French
> Consult digital automation catalogs at Digi-Cat Online

- Up-to-date catalogs
- Embedded product selectors,360° pictures
- Optimized search by commercial references

Select your training

> Find the right Training for your needs on our Global website
> Locate the training center with the selector tool, using this link

Life Is On | Schneider Electric

Altivar

Discover Altivar

Variable speed drives and soft starters

Altivar variable speed drives and soft starters deliver top performance in motor control applications across machines, processes, and buildings. With built-in intelligence, these smart connected devices gather and share data to improve operational efficiency, safety, and reliability.

Explore our offer

- Altivar Process
- Altivar Machine
- Altivar Building
- Altivar Soft Starters

Life Is On | Schneider Electric

Green Premium™

Enhance sustainability with Altivar™ Process drives

Superior environmental performance thanks to upgradability and modernization solutions

Altivar Process is **RoHS** and **REACH** compliant
- Transparent environment information
- Life Cycle Analysis, compliant with ISO 14025
- Circularity Profile

Altivar Process drives offer key benefits to help you achieve superior sustainable performance by enhancing functionality, performance, and capacity of both hardware and software.

The additional hardware options and firmware upgradability capabilities of Altivar Process can help you to maximize process continuity and operation, as well as reduce your operational expenses, by avoiding the need to replace your drive or modify your existing installation as a retrofit.

Benefits

- Maximize process continuity and operation
- Reduce your OPEX
- Easy scalability of your automation system
- Future-ready solution for Industry 4.0
- Improve the power quality of your system with a low investment
- Improve the Safety Integrity Level (SIL), and/or Performance Level (PEL), integration, and performance of your application
- Optimize your maintenance costs and the drive's service life

...SUSTAINABILITY READY

Green Premium™ | Sustainable performance, by design

Communication & Wi-Fi modules

The additional fieldbus modules allow you to easily integrate Altivar Process drives in your scalable automation system. Together with the Wi-Fi access point, they bring easy access to the real data provided by the drive, helping the digitalization and easy integration of the drive in Industry 4.0 technologies.

Passive filters*

The optional passive filter available with Altivar Process drives offers you the possibility to improve your installation's power quality by reducing the harmonics levels, even keeping your existing drives installed.

Additional I/O & safety modules*

The I/O module helps you to extend your application's performance and integration.

The Safety module optimizes the overall cost of the installation by avoiding the need for additional external devices, while conforming to international safety standards.

Firmware updates & Service expertise

Our global network of service experts offers you the possibility of upgrading your drive's firmware and modernizing its hardware to extend your drive's service life.

Experience the difference today at

se.com/green-premium

* For more information regarding the compatibility of these options, please visit us at se.com/drives

General contents

Presentation 1

Drive products 2

Drives for integration. 3

Drive Systems 4

Drives Field Services, index 5

EcoStruxure™
Innovation At Every Level

Schneider Electric's IoT-enabled, plug-and-play, open, secure, interoperable architecture and platform, in Industries, Infrastructures, Data Centers, and Buildings.

Innovation at every level

EcoStruxure is based on a three-tiered technology stack delivering innovation at every level, from connected products to edge control and apps, analytics, and services.

Together with our hybrid segments approach, this enhances your value around safety, reliability, operational efficiency, sustainability, and connectivity across 6 domains of expertise:

- Power
- IT
- Building
- Machine
- Plant
- Grid

Dedicated architectures and IoT

We tailor our solutions in the form of dedicated reference architectures for plants:

- Management systems
- Power systems
- Data center systems
- Industrial plant and machine systems
- Smart grid systems

The Industrial Internet of Things (IIoT) gives an additional boost to technologies. That's why we provide our customers with an IoT-enabled architecture and platform offering simple, reliable, productive, and cost-efficient solutions.

Cybersecurity solutions

Robust cybersecurity protection is a must, and Schneider Electric's solutions can deliver it, regardless of business type or industry.

The vendor-agnostic services provided by our skilled professionals help to protect your entire critical infrastructure. We help to assess your risk, implement cyber-specific solutions, and maintain your onsite defenses over time, while integrating appropriate IT policies and requirements.

This is our difference and your advantage.

Enhanced safety

With the release of M580 Safety, Schneider Electric further expands the EcoStruxure platform.

This consolidates our position as one of the most trusted industrial safety vendor, with thousands of Modicon and Triconex safety systems protecting the most critical industrial processes globally.

EcoStruxure™ Innovation At Every Level for Industry

*The Schneider Electric industrial software business and AVEVA have merged to trade as AVEVA Group plc, a UK listed company. The Schneider Electric and Life is On trademarks are owned by Schneider Electric and are being licensed to AVEVA by Schneider Electric.

Contents

1 - Presentation

■ **General presentation** ..... *page 1/2*

Wall-mounting and floor-standing drives selection guide ..... *page 1/4*

Drives for integration selection guide ..... *page 1/6*

Drive Systems selection guide ..... *page 1/8*

■ **Altivar Process variable speed drives presentation** ..... *page 1/9*

Variable speed drives

Altivar Process

Business optimization, real-time intelligence

1

Altivar Process

Provides the efficiency you deserve

Altivar Process is the new comprehensive range of variable speed drives from Schneider Electric, covering the majority of industrial applications with two series:

- ATV600: drives focused on fluid management and processing and energy saving
- ATV900: drives focused on maximum productivity with exceptional motor control and connectivity

Depending on customer requirements, Altivar Process drives are available as wall-mounting, floor-standing, and optimized solutions for integration in cabinets.

Wall-mounting drives
from 0.75 kW up to 315 kW
(1...500 HP)

Enclosed drive solutions
from 0.75 kW up to 2600 kW
(1...2600 HP)

Drives for cabinet integration
from 0.75 kW up to 2600 kW
(1...2600 HP)

Altivar Process range

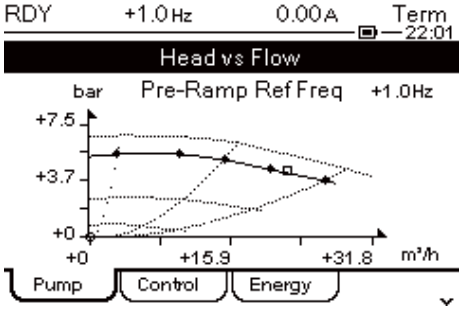

Pump monitoring display

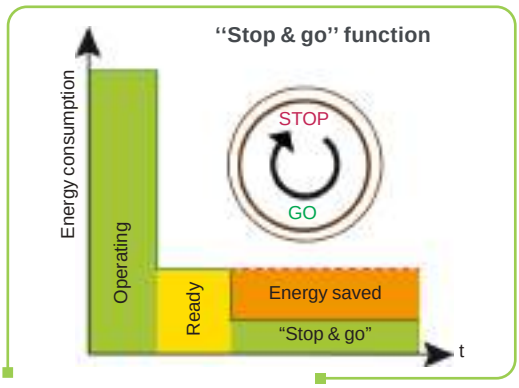

Calculate your level of energy efficiency with the Altivar Efficiency Calculator

Business optimization

Optimum monitoring of your process

- Instant reaction if pump efficiency drops thanks to embedded pump monitoring
- Notification of critical operating points without additional sensors
- Process integration with pressure, flow, and level control including compensation of flow losses

Energy-saving drive solution

- Up to 30% energy saving when on standby due to the innovative "stop & go" operation without additional costs
- Smart control of the internal fans depending on operation
- Optimum energy efficiency over the whole lifecycle
- Data logging and graphic display of the power consumption

Altivar Efficiency Calculator

This tool calculates the level of energy efficiency of your variable speed drive according to the Ecodesign standard EN/IEC 61800-9-2.

- **Drive efficiency (CDM Complete Drive Module)**
  Drive performance is determined according to 8 operating points considering torque and speed
- **System efficiency (PDS Power Drive System)**
  System performance is determined according to 8 operating points considering torque and speed. This includes the efficiency of the variable speed drive and its motor.

Variable speed drives
Altivar Process
User-friendliness, green product

Configure your Altivar drive with the EcoStruxure™ Motor Control Configurator

Real-time intelligence

Web server and services via Ethernet

- Embedded Web server interface based on the Ethernet network gives you process monitoring with your daily working tools.
- Local and remote access to energy use and customized dashboards means your energy is visible anywhere, any time, on PC, tablet, or smartphone.

ODVA organization: Supports network technologies based on EtherNet/IP

FDT Technology: A widely-accepted international standard in the automation industry

User-friendliness

Simple integration in PLC environments

- Easy integration thanks to standardized FDT/DTM and ODVA technology
- Supported by predefined EcoStruxure Control Expert libraries
- Easy access via PC, tablet, or smartphone
- Robust connection via Ethernet

Achilles™ Level 2 certified

Scanning the QR code from a smartphone or tablet

Instant access to online help

Sophisticated service concept

- Modular design provides easy spare parts logistics
- Optimized maintenance costs due to dynamic maintenance schedule, with integrated monitoring of individual components
- Simple exchange of power modules and fans
- Quick assistance with dynamic QR codes and Customer Care app

Green product

Designed to have a smaller carbon footprint

- The Green Premium product label, Schneider Electric's eco-mark, indicates your compliance with international environmental standards such as:
  - RoHS according to European Directive 2011/65 and the delegated Directive (EU) 2015/863
  - REACH according to EU regulation 1907/2006
  - IEC 62635: The end-of-life instructions comply with the latest recycling rules; up to 85% of the product components can be recycled

Variable speed drives

Altivar Process ATV600

Wall-mounting and floor-standing drives

Market segments	■ **Water & wastewater** ■ **Oil & gas** ■ **Mining, minerals & metals** ■ **Consumer packaged goods (CPG)**				
Mounting type	Wall mounting			Floor standing	
Degree of protection	IP20 and IP21/UL Type 1	IP55	IP55 with Vario disconnect switch	IP21	IP54
Power range for 50...60 Hz line supply – Three-phase: 200...240 V (kW/*HP*)	0.75...75/*1...100*	–	–	–	–
Power range for 50...60 Hz line supply – Three-phase: 380...440 V (kW)	–	–	–	110...315	110...315
Power range for 50...60 Hz line supply – Three-phase: 380...480 V (kW/*HP*)	0.75...315/*1...500*	0.75...90/*1...125*	0.75...90/*1...125*	–	–
Power range for 50...60 Hz line supply – Three-phase: 500...690 V (kW/*HP*)	1.5...75/*2...100*	–	–	–	–
Drive – Output frequency	0.1...500 Hz				
Drive – Control type – Asynchronous motor	Standard constant torque, variable standard torque, optimized torque mode				
Drive – Control type – Synchronous motor	PM (permanent magnet) motor, synchronous reluctance motor				
Functions – Advanced functions	■ Accurate measurement for monitoring system energy consumption (deviation < 5%) ■ Installation energy drift detection ■ Embedded Ethernet with direct access to system configuration and monitoring ■ Integration of actual pump curves to optimize the system operating point ■ Optimized pump monitoring based on actual operating point ■ Sensorless estimated flow rate ■ Measurements expressed in working units (e.g. m^3/h, kWh/m^3) ■ Limitation of overvoltage at the motor terminals ■ Contextual access to technical documentation through dynamic QR code ■ Continuous and historical real-time measurements with customizable dashboards ■ Predictive and preventive maintenance tracking functions (e.g. temperature with PT100/1000 probe, fan monitoring)				
Functions – Integrated safety function	1: STO (Safe Torque Off) SIL3				
Functions – Number of preset speeds	16				
Number of integrated I/O – Analog inputs	3: Configurable as voltage (0...10 V) or current (0-20 mA/4-20 mA), 2 of them including probes (PTC, PT100, PT1000, or KTY84)				
Number of integrated I/O – Digital inputs	6: Voltage 24 V ⎓ (positive or negative logic)				
Number of integrated I/O – Analog outputs	2: Configurable as voltage (0...10 V) or current (0-20 mA)				
Number of integrated I/O – Relay outputs	3: 1 with NO/NC contacts and 2 with NO contacts				
Number of integrated I/O – Safety function inputs	2: For safety function STO				
Extended I/O module (optional) – Analog inputs	2 differential analog inputs configurable via software as current (0-20 mA/4-20 mA), or for PTC, PT100, or PT1000, 2- or 3-wire probe				
Extended I/O module (optional) – Digital inputs	6: Voltage 24 V ⎓ (positive or negative logic)				
Extended I/O module (optional) – Digital outputs	2: Assignable				
Extended relay module (optional) – Relay outputs	3: NO contacts				
Communication – Integrated	Modbus/TCP, Modbus serial link				
Communication – Option modules	EtherNet/IP and Modbus/TCP dual port, ProfiNet, CANopen RJ45 daisy chain, SUB-D, and screw terminal block, Profibus DP V1, DeviceNet, and BACnet MS/TP				
Configuration and runtime tools	Graphic display terminal, embedded Web server, DTM (Device Type Manager), SoMove software				
Standards and certifications	UL 508C and UL61800-5-1 *(1)*, EN/IEC 61800-3, EN/IEC 61800-3 environment 1 category C2, EN/IEC 61800-3 environment 2 category C3, EN/IEC 61800-5-1, IEC 61000-3-12, IEC 60721-3, IEC 61508 *(2)*, ATEX 2/22, ATEX 1/21, SEMI F47-0706			EN/IEC 61800-3, EN/IEC 61800-3 environment 2 category C3, EN/IEC 61800-5-1, IEC 60721-3, IEC 61508, ATEX 2/22, ATEX 1/21	
References	**ATV630●●●●●**	**ATV650●●●●●**	**ATV650●●●●●E**	**ATV630●●●●●F**	**ATV650●●●●●F**
Page	2/4	2/7	2/8	2/10	2/11

(1) Evaluated UL standards may differ per drive reference. Please refer to our website for more details.
(2) For marine product certificate, please contact your Schneider Electric representative.

More technical information on www.se.com

Variable speed drives

Altivar Process ATV600

Drives for integration

Market segments		■ **Water & wastewater** ■ **Oil & gas** ■ **Mining, minerals & metals** ■ **Consumer packaged goods (CPG)**		■ **Water & wastewater** ■ **Oil & gas** ■ **Mining, minerals & metals**
Mounting type		Cabinet integration			
Drive type		Drive products for cabinet integration	Modular Standard drives	Modular Low Harmonic/Regen drives	Modular Liquid-cooled drives
Degree of protection		IP20	IP00		
Power range for 50...60 Hz line supply	Three phase: 380…480 V (kW/*HP*)	0.75...90/*1...120*	–		–
	Three-phase: 400 V (kW)	–	110...800		110...1800
	Three-phase: 440 V (kW)	–	110...800		110...1800
	Three-phase: 480 V (*HP*)	–	150...1100		150...2500
	Three-phase: 500 (kW)	–	75...800		110...1900
	Three-phase: 600 (*HP*)	–	125…1200		150...2600
	Three-phase: 690 (kW)	–	110…1200		160...2600
Drive	Output frequency	0.1...500 Hz			
	Control type Asynchronous motor	Standard constant torque, variable standard torque, optimized torque mode			
	Synchronous motor	PM (permanent magnet) motor, synchronous reluctance motor			
Functions	Advanced functions	Including all the advanced features of ATV600 drives: ■ Accurate measurement for monitoring system energy consumption (deviation < 5%) ■ Installation energy drift detection ■ Embedded Ethernet with direct access to system configuration and monitoring ■ Integration of actual pump curves to optimize the system operating point ■ Optimized pump monitoring based on actual operating point ■ Sensorless estimated flow rate ■ Measurements expressed in working units (e.g. m^3/h, kWh/m^3) ■ Limitation of overvoltage at the motor terminals ■ Contextual access to technical documentation through dynamic QR code ■ Continuous and historical real-time measurements with customizable dashboards ■ Predictive and preventive maintenance tracking functions (e.g. temperature with PT100/1000 probe, fan monitoring) ■ Easy setting of drive identification for Altivar Process Modular drives			
	Integrated safety function	1: STO (Safe Torque Off) SIL3			
	Number of preset speeds	16			
Number of integrated I/O	Analog inputs	3: Configurable as voltage (0...10 V) or current (0-20 mA/4-20 mA), 2 of them including probes (PTC, PT100, PT1000, or KTY84)			
	Digital inputs	6: Voltage 24 V ⎓ (positive or negative logic)			
	Digital output	–			
	Analog outputs	2: Configurable as voltage (0...10 V) or current (0-20 mA)			
	Relay outputs	3: 1 with NO/NC contacts and 2 with NO contacts			
	Safety function inputs	2: For safety function STO			
Extended I/O module (optional)	Analog inputs	2 differential analog inputs configurable via software as voltage (0...±10 V) or current (0-20 mA/4-20 mA), or for PTC, PT100, or PT1000 2- or 3-wire probes			
	Digital inputs	6: Voltage 24 V ⎓ (positive or negative logic)			
	Digital outputs	2: Assignable			
Extended relay module (optional)	Relay outputs	3: NO contacts			
Communication	Integrated	Modbus/TCP, Modbus serial link			
	Option modules	Ethernet/IP, Modbus TCP and MD-Link dual port, CANopen RJ45 daisy chain, SUB-D, and screw terminal block, PROFINET, PROFIBUS DP V1, DeviceNet, BACnet MS/TP, POWERLINK			
Configuration and runtime tools		Graphic display terminal, embedded Web server, DTM (Device Type Manager), SoMove software			
Standards and certifications		86/188/EEC, IEC 61000-4-2, IEC 61000-4-3, IEC 61000-4-4, IEC 61000-4-5, IEC 61000-4-6, EN/IEC 61800-3, EN/IEC 61800-5-1, IEC 61000-3-12, IEC 60721-3, IEC 61508, IEC 13849-1, TÜV certification, CE marking, ATEX 2/22, ATEX 1/21	86/188/EEC, IEC 61000-4-2, IEC 61000-4-3, IEC 61000-4-4, IEC 61000-4-5, IEC 61000-4-6, EN/IEC 61800-3, EN/IEC 61800-5-1, IEC 61000-3-12, IEC 60721-3, IEC 13849-1, TÜV certification, CE marking, cULus, IEC 61508, Marine certification (DNV-GL, ABS, RINA, BV, LR) *(1)*, ATEX 2/22, ATEX 1/21		86/188/EEC, IEC 61000-4-2, IEC 61000-4-3, IEC 61000-4-4, IEC 61000-4-5, IEC 61000-4-6, EN/IEC 61800-3, EN/IEC 61800-5-1, IEC 61000-3-12, IEC 60721-3, IEC 13849-1, TÜV certification, CE marking, cULus, IEC 61508, ATEX 2/22, ATEX 1/21
References		**ATV630●●●N4Z**	**ATV6A0●●●●●**	**ATV6B0●●●●●**	**ATV6L0●●●●●**
Page		3/6	3/8	3/14	3/20

(1) For marine product certificate, please contact your Schneider Electric representative.

More technical information on www.se.com

Market segments		■ **Water & wastewater** ■ **Oil & gas** ■ **Mining, minerals & metals** ■ **Consumer packaged goods (CPG)**	
Power range for 50...60 Hz line supply	Three-phase: 315...415 V, 480 V (kW)	90...800	
Main characteristics		Compact Drive Systems with an integrated line reactor to reduce the current harmonics THDi < 48%	Low Harmonic Drive Systems with 3-level technology to reach a total distortion factor THDi of around 2% which fulfills the requirements according to IEEE 519 of THDi < 5%
Variants		Compact Standard offer Modular with integrated options (CTO) User-definable on request (ETO, Full ETO)	Low Harmonic Standard offer Modular with integrated options (CTO) User-definable on request (ETO, Full ETO)
Degree of protection		IP23 IP54 with separate air flows as an option	
Drive	Output frequency	0.1...500 Hz	
	Type of control – Asynchronous motor	Standard constant torque, variable standard torque, optimized torque mode	
	Type of control – Synchronous motor	PM (permanent magnet) motor, synchronous reluctance motor	
Communication	Integrated	Modbus/TCP Modbus serial link Ethernet	
	As an option	EtherNet/IP and Modbus/TCP dual port PROFINET CANopen RJ45 daisy chain, SUB-D9, and screw terminal block Profibus DP V1 DeviceNet	
Interfaces and runtime tools		Graphic display terminal in the enclosure door Control terminals inside the enclosure Control terminals can be extended Reading of the parameters via USB interface on the keypad Embedded Web server, DTM (Device Type Manager), SoMove software	
Standards and certifications		CE, EAC, RCM, EN/IEC 61439, EN/IEC 61800-3, EN/IEC 61800-3 environment 2 category C3, EN/IEC 61800-5-1, IEC 60721-3, IEC 61508, ATEX 2/22, ATEX 1/21	CE, EAC, RCM, EN/IEC 61439, EN/IEC 61800-3, EN/IEC 61800-3 environment 2 category C3, EN/IEC 61800-5-1, IEC 60721-3, IEC 61508, ATEX 2/22, ATEX 1/21, IEEE 519
References		**ATV660●●●●4X1**	**ATV680●●●●4X1**
Page		4/8	4/14

Variable speed drives
Altivar Process ATV600

Altivar Process range

Process

Altivar Process drives are specifically designed to meet the requirements of following market segments:

- Water & wastewater
- Oil & gas
- Mining, minerals & metals
- Consumer packaged goods (CPG)

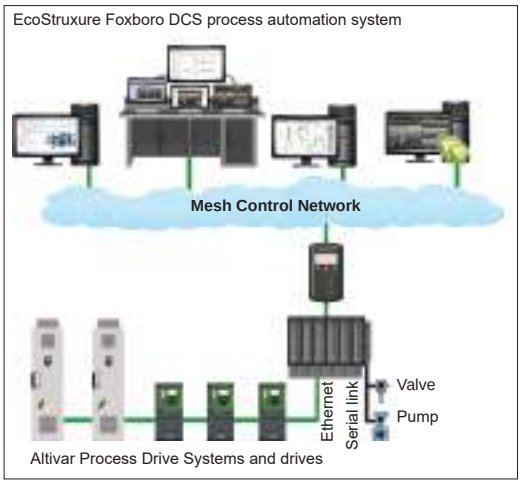

Altivar Process in EcoStruxure Foxboro DCS architecture

EcoStruxure Plant™ integration

The association of Altivar Process services with Schneider Electric process automation control systems like EcoStruxture Foxboro DCS (for process systems) or EcoStruxure Hybrid DCS (for hybrid systems) offers a high-performance, global automation and motor control solution with optimized total cost of ownership (TCO).

The solution provides operational integrity for people, processes, and assets, with improved maintenance support to reduce downtime and helps to ensure operation continuity.

It offers operational insight by accessing more information to optimize the process and control energy efficiency.

Based on market standards (FDT/DTM, Ethernet, etc.), it is a sustainable, scalable solution that enables processes to be adapted easily and affordably.

Water & wastewater applications

- Pumping
- Drilling
- Suction
- Dosing
- Odor control
- Ventilation
- Gas compression
- Sludge removal

Use

- Pumping station and storage tank
- Irrigation
- Treatment plant
- Desalination plant
- Storage and booster station
- Housing
- Wastewater lift station
- Wastewater treatment
- Discharge back into the environment, land application

Variable speed drives: page 2/2
Configuration and runtime tools: page 2/14
Combinations: page 2/18
Dimensions: page 2/55

1

Process (continued)

Oil & gas applications

- ■ Hydrocarbon production:
  - □ Drilling
  - □ Offshore and onshore extraction
  - □ Water treatment and re-injection
  - □ Crude oil storage
  - □ Separation
  - □ Pipeline pumping
  - □ Storage
  - □ Refining
  - □ DOF (digital oil field)

Use

- ■ Pumps:
  - □ Submersible
  - □ Hydraulic
  - □ Pipeline
  - □ Reverse flow
  - □ Water injection
  - □ Kerosene
- ■ Regasification compressors
- ■ Refining:
  - □ Fans
  - □ Compressors

Mining, minerals & metals applications

- ■ Flotation and thickening
- ■ Rinsing and filtration
- ■ Mine shaft pumping
- ■ Preheater fan
- ■ Waste gas evacuation
- ■ Cooling fan
- ■ Separator for vertical roller mill
- ■ Storage and loading
- ■ Water supply
- ■ Pumping
- ■ Drying fans

Use

- ■ Conveyors
- ■ Grinders
- ■ Mixers
- ■ Pumps
- ■ Crushers
- ■ Kiln drives for cement industry
- ■ Tunnel boring machines

Consumer packaged goods (CPG)

- ■ Pumping
- ■ Drying fans

Use

- ■ Conveyors
- ■ Mixers
- ■ Centrifuges
- ■ Pumps
- ■ Extruders

Variable speed drives: page 2/2
Configuration and runtime tools: page 2/14
Combinations: page 2/18
Dimensions: page 2/55

Variable speed drives
Altivar Process ATV600

Cooling system with two separate air flows

General presentation of the offer

Altivar Process drives can help improve equipment performance and reduce operating costs by optimizing energy consumption and user comfort.
Altivar Process drives provide a wide range of integrated functions, such as:

- Safety and automation functions that meet the requirements of some of the most demanding applications
- Various optional communication modules available for seamless integration into the main automation architectures
- Numerous configurable I/O as standard to facilitate adaptation to specific applications
- Intuitive commissioning using the graphic display terminal
- Local and remote access and monitoring using the embedded Web server
- Energy savings and protection of the grid by means of integrated harmonic filters
- Installation EMC conformity by means of integrated EMC filters

Depending on the power range, Altivar Process is available with several mounting types, protection ratings, and cooling concepts for building air-cooled solutions, as well as liquid-cooled solutions in higher power ranges:

- Wall-mounting IP20/21/UL Type 1 from 0.75 to 315 kW/*1 to 500 HP*, ready-to-use for easy integration inside or without an enclosure in an electrical room
- Wall-mounting IP55 from 0.75 to 90 kW/*1 HP to 125 HP*, ready-to-use for easy integration in harsh environments and installations close to the system to reduce the length of the motor cable. The wall-mounting IP55 offer is available with and without a disconnect switch.
- Floor-standing IP21 and IP54 from 110 to 315 kW, ready-to-use in high-power ranges with minimum dimensions for easy, optimized integration in an electrical room in a standard or harsh environment
- Floor-standing IP23 and IP54 from 110 to 800 kW, fully customizable by configuration tool, ready-to-use. Up to 2600 kW available as Engineered Drive System variant.
- Cabinet integration from 75 to 2600 kW/*125 to 2600 HP*, designed for easy and cost-effective integration of power-intensive drives into cabinets
- Cabinet integration IP20 from 0.75 to 90 kW/*1 to 125 HP*, for easy and cost-effective drive configuration inside enclosures

Cabinet integration

Get more than just a drive with the Altivar Process Modular offer for cabinet integration:

- Standardized and cost-effective integration with power rating through module paralleling up to 2600 kW/*2600 HP*
- Integrated category C3 EMC filter
- Reduced harmonics with integrated line choke for standard drives and less than 3% THDi for Low Harmonic (LH) drives
- Integrated highly efficient motor filter reducing the risk of motor winding insulation aging and motor damage even for longer motor cables
- Ready-to-connect line supply terminals on top and motor terminals at the bottom
- Reduced downtime of assets thanks to easily changeable electric core components such as power module with wheel (for standard drives) and power fan (for LH and standard drives) inside a drawer accessible from the front face

Enclosed high-power drive solutions

The floor-standing IP21/IP54 fully customizable turnkey drive offers integrate:

- Drive power and control modules
- Semiconductor protection fuses
- Line chokes to limit THDi levels
- A filter to help protect the motor against the effects of dv/dt
- Accessible busbars to simplify the motor wiring and power wiring

The IP54 variant features additional equipment, such as:

- A main switch with external handle
- A system for separating the cooling air flow between the power and control sections, allowing operation in a highly polluted environment as well as optimum management of thermal stress in the plant room

Altivar Process drives can be supplied as Engineered Drive System variants from 75 to 2600 kW/*125 to 2600 HP*, developed by Schneider Electric based on customer specifications. Engineered drives are available as standard with THDi level < 48% and as a Low Harmonic solution with THDi level < 3%.

Variable speed drives: page 2/2
Configuration and runtime tools: page 2/14
Combinations: page 2/18
Dimensions: page 2/55

1

ATV630D45Y6 equipped with IP20/UL Type 1 wall-mounting kit

General presentation of the offer (continued)

Rugged

Altivar Process drives are designed to adapt to the harshest environments.

- ■ Ambient operating temperature
- □ Wall-mounting drives:
  - IP20/21: up to 160 kW/*250 HP*, -15...+50 °C/*5...122 °F* as standard, up to 60 °C/*140 °F* with derating; above 160 kW/*250 HP*, -10...+40 °C/*14...104 °F* as standard, up to 60 °C/*140 °F* with derating
  - IP55: -15...+40 °C/*5...104 °F* as standard, up to 50 °C/*122 °F* with derating
- □ Floor-standing IP21/IP23/IP54 and cabinet integration drives:
  - 0...40 °C/*32...104 °F* as standard
  - 40...50 °C/*104...122 °F* with derating
- ■ Relative humidity without condensing: 5...95%
- ■ Storage and transport temperature: -40…+70 °C/*-40…+158 °F*
- ■ Operating altitude:
- □ 0…1,000 m/*0…3,281 ft* without derating
- □ 1,000...4,800 m/*3,281…15,700 ft* with derating of 1% per 100 m/*328 ft (1)*
- ■ Withstand to harsh environments:
- □ Chemical class 3C3 conforming to IEC/EN 60721-3-3 *(2)*
- □ Mechanical class 3S3 conforming to IEC/EN 60721-3-3 *(2)*
- □ Printed circuit boards with protective coating
- ■ Protection to suit requirements:
- □ IP00 for mounting in an enclosure, depending on the model
- □ IP20/21/UL type 1 for wall mounting in a plant room and in an enclosure
- □ IP55 for wall mounting, with protection against dust and water jets
- □ Floor-standing IP21 or IP23
- □ Floor-standing IP54, with protection against dust and water jets
- □ Engineered Drive System variants up to IP66

A large number of external options can be combined with the Altivar 600:

- ■ Line chokes and passive filters (see page 2/41)
- ■ Additional EMC input filters for reducing conducted emissions on the line (see page 2/38)
- ■ Dv/dt filters and sinus filters for long cable runs or to remove the need for shielding (see page 2/42)
- ■ Mounting options: The Altivar 600 drive can be mounted in a variety of ways to adapt to the various needs of an installation:
- □ Mounting without an enclosure: The Altivar 600 drive can be mounted directly on a wall without having to be installed inside an enclosure. IP20/21 UL Type 1 conformity can be achieved by using kits, for drives above 110 kW/*150 HP* at 380...480 V and for drives from 2.2 to 90 kW/*3 to 125 HP* at a 690 V supply voltage (see page 2/12).
- □ Optimized enclosures: A patented flange mounting kit is used to remove the heat generated by the power unit outside the enclosure when the variable speed drive is integrated in a cabinet (see page 2/13).

(1) ATV630U22Y6...D90Y6 drives with 500...690 V supply can operate at a maximum of 2,000 m (6,560 ft) altitude.

(2) Altivar Process ATV630C22N4...C31N4 drives are certified as chemical class 3C2 and mechanical class 3S2 conforming to IEC/EN 60721.

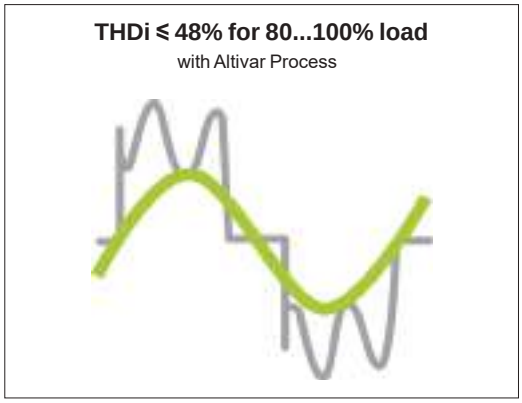

Altivar Process drive THDi

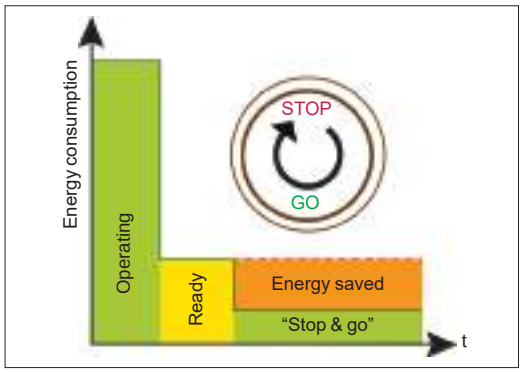

"Stop & go" function

General presentation of the offer (continued)

Energy

Altivar Process drives help to optimize power consumption by reducing the rms input current for the same load.

- ■ Standard offer:
  - □ THDi ≤ 48% for 80 to 100% load, which is used to maintain an optimum power factor on the most common operating range
  - □ Embedded low harmonic DC choke technology complying with standard IEC 61000-3-12 for the 380…480 V offer
  - □ Embedded line choke for Altivar Process Modular and floor-standing drive solutions
- ■ Passive filter options
  - □ Low Harmonic offer compatible with standard IEEE 519

In addition, thanks to the "stop & go" function, Altivar Process drives can reduce power consumption by up to 30% during system stop phases by disabling some functions automatically (the power section, fans, backlighting, etc.). On a system restart request, the Altivar Process drive takes less than 2 seconds to restart the motor.

Integrated as standard, the "stop & go" function can be enabled and disabled in the drive parameters.

Environment

The Altivar Process drives offer has been developed to meet the requirements of directives regarding protection of the environment and to anticipate future changes in regulations:

- ■ RoHS-2 *(1)*
- ■ REACH *(2)* + solution for REACH Substitute It Now (halogen-free wiring and plastics)
- ■ PEP (Product Environmental Profile) eco-passport program for reducing the carbon footprint and conserving raw materials
- ■ EoLI (end-of-life instruction) *(3)*
  - □ More than 70% recyclable materials (new ruling)
- ■ Efficient energy management: 30% reduction in consumption

Electromagnetic compatibility (EMC)

Compliance with electromagnetic compatibility requirements has been incorporated into the design of Altivar Process Modular drives, which simplifies installation and provides an economical means of helping to ensure equipment meets CE marking requirements.
Altivar Process drives have a category C2 or C3 EMC filter, except ATV630U07M3...D75M3 models, which can take an additional filter to meet more stringent requirements (see page 2/38).

Altivar Process Modular drives have category C3 EMC filters that allow 300 m/*980 ft* of shielded motor cables.

(1) European directive 2002/95/EC Restriction of Hazardous Substances
(2) European regulation 1907/2006
(3) According to IEC 62635 Enhanced Guidelines

1

General presentation of the offer (continued)

Installation/Maintenance

Altivar Process drives are ergonomically designed to adapt to any type of installation:

- ■ Products, systems, or integrated in iMCC
- ■ IP00, IP20/21 UL Type 1, IP55, IP54
- ■ IP00 modules that can be integrated in cabinets with a protection rating up to IP66 as a standard integration
- ■ Easy installation of products and systems:
  - □ Cable entry equipped with Romex cable clamps to maintain an EMC connection for the power and control cable (optional for 500...690 V drives)
  - □ Color code for connections to the removable terminal blocks on the HMI block
  - □ Long cable for wall mounting: Up to 150 m/*492 ft* with category C3 EMC filter at 380…480 V
  - □ Long cable for Altivar Process Modular and floor-standing offer: Highly efficient integrated motor filters for dv/dt and common mode reduction and voltage peak limitation allow motor cable lengths of up to 300 m/*980 ft* with shielded cable (category C3 environment) and 500 m/*1,640 ft* with unshielded cable (category C4 environment)
- ■ Asynchronous or synchronous drive in open loop for 0.1...500 Hz output frequency
- ■ Special motors: Submersible and tapered rotor motors
- ■ Lower maintenance costs due to drive's ergonomic design:
  - □ Fans can be replaced in less than 5 minutes
  - □ No maintenance tool required
  - □ Limited number of parts
- ■ Embedded Web server:
  - □ Compatible process elements for easier implementation
  - □ Direct worldwide access to monitoring and maintenance functions:
    - Reading values
    - Modifying data
    - Configuring parameters
    - Changing controller status

Integrated functions

Altivar Process drives include numerous advanced functions for the more complex applications in each market segment.

Advanced functions

- Accurate measurement for monitoring system energy consumption (deviation < 5%)
- Installation energy drift detection
- Embedded Ethernet with direct access to system configuration and monitoring
- Integration of actual pump curves to optimize the system operating point
- Optimized pump monitoring based on actual operating point
- Sensorless estimated flow rate
- Measurements expressed in working units (e.g. m^3/h, kWh/m^3)
- Limitation of overvoltage at the motor terminals
- Contextual access to technical documentation through dynamic QR code
- Continuous and historical real-time measurements with customizable dashboards
- Predictive and preventive maintenance tracking functions (e.g. temperature with PT100/1000 probe, fan monitoring)

Power measurement function

Altivar Process drives integrate a power measurement function accurate to within 5%, based on measurement of the motor voltage and the power supply:

- Process drift detection for installation reliability throughout its entire service life
- Useful system performance information provided by comparing the energy used with the energy produced:
  - Typical KPIs:
    - Specific energy consumption
    - kWh/m^3
    - $kWh/mWc/m^3$

Users are therefore able to monitor and analyze input power, energy produced, and the KPIs directly from the drive or from the process management system.

Altivar Process DTM in EcoStruxure Control Expert

Safety and monitoring functions

The Safety function STO and numerous monitoring functions are provided to help protect personnel and equipment.

- Advantages:
  - Time savings in terms of installation design and compliance
  - Fewer components and cables
  - Optimum space
  - Simplified setup of machines
  - Improved maintenance performance; limited machine intervention time and installation downtime
  - Optimized conditions for maintenance operations
- Conformity to standards EN/IEC 61508, EN/ISO 13849, and IEC 61800-5-2
- Integrated STO (Safe Torque Off) function, SIL3/Ple
- Monitoring function to help protect against premature wear:
  - Monitoring of pumping cycles
  - Start-stop of centrifugal pumps
  - Monitoring of start cycles (number of starts per hour)
  - Monitoring function to help protect against water hammer
  - Cleaning of pumps by reversing the flow (anti-clogging)

1

Integration

Communication protocols

- ■ Modbus/TCP, EtherNet/IP, and Modbus serial link:
- □ Standard Modbus and Ethernet protocols
- □ Connection of configuration and runtime tools
- □ Control and supervision of the Altivar Process in process architectures (controllers, SCADA systems, HMIs, etc.) in industrial networks (read/write data)
- □ Diagnostic, supervision, and fieldbus management functions
- ■ Ethernet services:
- □ SNMP, SNTP, BootP & DHCP, IP v6, cybersecurity services, FDR
- □ Open Ethernet topologies

Integration of configuration and runtime tools

- ■ FDT/DTM technology (see page 2/17):
- □ Drive configuration, diagnostics, and control using EcoStruxure Control Expert

Configuration and runtime tools

- ■ Graphic display terminal (see page 2/14):
- □ Drive control, adjustment, and configuration
- □ Display of current values (motor, I/O, etc.)
- □ Configuration storage and download
- □ Duplication of one drive configuration on another drive from a PC or another drive
- □ Remote use by means of appropriate accessories (see page 2/15)
- □ Connection to several drives using multidrop link components (see page 2/15)
- ■ Embedded Web server (see page 2/16):
- □ Easily accessible from any PC, iPhone, iPad, Android system, and major Web browsers
- □ Network diagnostics in real time
- □ Read/write values
- ■ SoMove software (see page 2/17):
- □ Advanced functions for configuration, setup, and maintenance of Altivar Process drives

Embedded Web server login screen

Integrated services

Altivar Process drives feature integrated services to achieve optimum time savings:

- ■ Simplified communication:
- □ Ethernet port with embedded Web server
- ■ Energy management (integrated power measurement)
- ■ Dynamic predictive maintenance
- ■ 3 QR codes:
  - Access to the Customer Care Center application and product data sheet
  - Direct access to description of the functions
  - QR code generated in the event of a detected error (red screen): Identification of the detected error, probable causes, and remedies

Contents

2 - Drive products

Altivar Process ATV600 variable speed drives

- **Altivar Process variable speed drives presentation** ..... page 2/2
- **200...240 V 50/60 Hz wall-mounting drives** ..... page 2/4
- **380...480 V 50/60 Hz wall-mounting drives** ..... page 2/5
  - IP21/UL Type 1, with category C2 or C3 integrated EMC filter ..... page 2/5
  - IP55, with category C2 or C3 integrated EMC filter ..... page 2/7
  - IP55, with Vario disconnect switch and category C2 or C3 integrated EMC filter ..... page 2/8
- **500...690 V 50/60 Hz wall-mounting drives** ..... page 2/9
- **380...440 V 50/60 Hz floor-standing drives** ..... page 2/10
- **Replacement parts** ..... page 2/12
- **Accessories** ..... page 2/13
- **Configuration and runtime tools** ..... page 2/14
  - Graphic display terminal ..... page 2/14
  - Web server, DTM, and SoMove software ..... page 2/16

Options

- **Drive/option combinations** ..... page 2/18
- **Additional I/O modules** ..... page 2/23
- **Communication buses and networks** ..... page 2/25
  - Integrated ports ..... page 2/27
  - Communication modules ..... page 2/28
- **Passive filters** ..... page 2/33
- **EMC filters** ..... page 2/38
- **AC line chokes** ..... page 2/41
- **Output filters** ..... page 2/42
  - dv/dt filters ..... page 2/42
  - Sinus filters ..... page 2/45
  - Common mode filters ..... page 2/47

Motor starters

- **200...240 V 50/60 Hz supply** ..... page 2/49
- **380...415 V 50/60 Hz supply** ..... page 2/50
- **440 V 50/60 Hz supply** ..... page 2/52
- **500...690 V 50/60 Hz supply** ..... page 2/54

Dimensions

- **Drives** ..... page 2/55
- **Options** ..... page 2/59

ATV630●●●N4F, ATV630●●●M3, ATV630●●●Y6, ATV650●●●N4, ATV650●●●N4E

Extensive offer

The Altivar Process wall-mounting and floor-standing products cover motor power ratings from 0.75...315 kW/*1...500 HP* for three-phase voltages between 200...240 V, 380...480 V, and 500...690 V.

Three-phase power supply	Motor power	Degree of protection	Reference
200...240 V (-15...10%)	0.75 kW...75 kW *1...100 HP*	IP21 UL Type 1	**ATV630U07M3...D75M3**
380...480 V (-15...10%)	0.75 kW...315 kW *1...500 HP*	IP21 UL Type 1	**ATV630U07N4...C31N4**
		IP55	**ATV650U07N4...D90N4**
		IP55	**ATV650U07N4E...D90N4E** *(1)*
380...440 V (-15...10%)	110 kW...315 kW *150...500 HP*	IP21	**ATV630C11N4F...C31N4F**
		IP54	**ATV650C11N4F...C31N4F**
500...690 V (-15...10%)	2.2...90 kW *3...125 HP*	IP20 UL Type 1	**ATV630U22Y6...D90Y6**

(1) Integrated with disconnect switch.

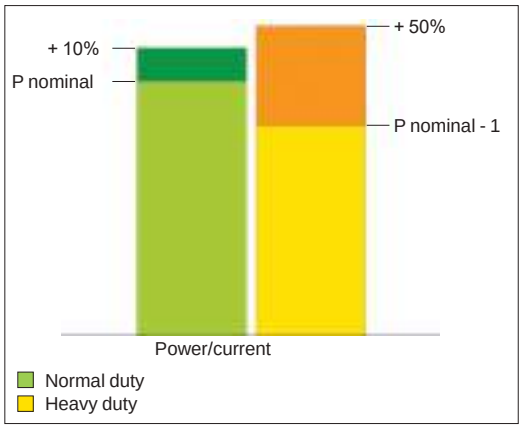

Normal duty and Heavy duty modes

Altivar Process variable speed drives are designed for use in two operating modes that can optimize the drive nominal rating according to the system constraints.

These two modes are:
- Normal duty (ND): Dedicated mode for applications requiring a slight overload (up to 110%) with a motor power no higher than the drive nominal power
- Heavy duty (HD): Dedicated mode for applications requiring a significant overload (up to 150%) with a motor power no higher than the drive nominal power derated by one rating

Presentation: page 1/9
Configuration and runtime tools: page 2/14
Combinations: page 2/18
Dimensions: page 2/55

Accessories and options

Altivar Process drives are designed to take numerous accessories and options to increase their functionality and also their capacity for integration and adaptation.

Accessories

- ■ Drive:
- □ Fan kit (see page 2/12)
- ■ Graphic display terminal:
- □ Remote mounting kit for mounting on enclosure door (see page 2/15)
- □ Multidrop connection accessories for connecting several drives to the RJ45 terminal port (see page 2/15)

Options

- ■ Modules (see page 2/23):
- □ Extended I/O module:
  - 2 analog inputs
  - 6 digital inputs
  - 2 digital outputs
- □ Extended relay module:
  - 3 NO contacts
- □ Communication:
  - EtherNet/IP and Modbus TCP dual port
  - CANopen bus: RJ45 daisy chain, SUB-D, 5-way screw terminals
  - PROFINET bus
  - Profibus DP V1 bus
  - DeviceNet bus
  - BACnet MS/TP
- ■ Passive filters (see page 2/33)
- ■ Additional EMC input filters for reducing conducted emissions on the line (see page 2/38)
- ■ Output filters:
- □ dv/dt filters (see page 2/42)
- □ Sinus filters (see page 2/45)

Motor starters

Schneider Electric offers combinations of circuit breakers and contactors to be able to use Altivar Process drives in optimum conditions (see page 2/49).

Variable speed drives

Altivar Process ATV600

Three-phase supply voltage: 200...240 V 50/60 Hz
Wall-mounting drives

ATV630D11M3

ATV630D15M3

ATV630D30M3

ATV630D75M3

200...240 V (-15...10%) IP21/UL Type 1 drives (1)

Motor			Line supply				Altivar Process			
Power indicated on rating plate (2)			Line current (3)		Apparent power	Maximum prospective line Isc	Maximum continuous current (2)	Max. transient current for 60 s	Reference (1)	Weight
			200 V	240 V	240 V					
ND:	Normal duty (4)									
HD:	*Heavy duty (5)*									
	kW	*HP*	A	A	kVA	kA	A	A		kg/ *lb*
THDi ≤ 44% at 100% load in Normal duty (4)										
ND	0.75	*1*	3	2.6	1.1	50	4.6	5.1	ATV630U07M3	4.300/ *9.480*
HD	*0.37*	*0.5*	*1.7*	*1.5*	*0.6*	*50*	*3.3*	*5*		
ND	1.5	*2*	5.9	5	2.1	50	8	8.8	ATV630U15M3	4.300/ *9.480*
HD	*0.75*	*1*	*3.3*	*3*	*1.2*	*50*	*4.6*	*6.9*		
ND	2.2	*3*	8.4	7.2	3	50	11.2	12.3	ATV630U22M3	4.500/ *9.921*
HD	*1.5*	*2*	*6*	*5.3*	*2.2*	*50*	*8*	*12*		
ND	3	–	11.5	9.9	4.1	50	13.7	15.1	ATV630U30M3	4.500/ *9.921*
HD	*2.2*	*3*	*8.7*	*7.6*	*3.2*	*50*	*11.2*	*16.8*		
ND	4	*5*	15.1	12.9	5.4	50	18.7	20.6	ATV630U40M3	4.600/ *10.141*
HD	*3*	–	*11.7*	*10.2*	*4.2*	*50*	*13.7*	*20.6*		
ND	5.5	*7.5*	20.2	17.1	7.1	50	25.4	27.9	ATV630U55M3	7.700/ *16.976*
HD	*4*	*5*	*15.1*	*13*	*5.4*	*50*	*18.7*	*28.1*		
ND	7.5	*10*	27.1	22.8	9.5	50	32.7	36	ATV630U75M3	13.800/ *30.424*
HD	*5.5*	*7.5*	*20.2*	*17.1*	*7.1*	*50*	*25.4*	*38.1*		
ND	11	*15*	39.3	32.9	13.7	50	46.8	51.5	ATV630D11M3	13.800/ *30.424*
HD	*7.5*	*10*	*27.2*	*23.1*	*9.6*	*50*	*32.7*	*49.1*		
ND	15	*20*	52.6	45.5	18.9	50	63.4	69.7	ATV630D15M3	27.300/ *60.186*
HD	*11*	*15*	*40.1*	*34.3*	*14.3*	*50*	*46.8*	*70.2*		
ND	18.5	*25*	66.7	54.5	22.7	50	78.4	86.2	ATV630D18M3	27.300/ *60.186*
HD	*15*	*20*	*53.1*	*44.9*	*18.7*	*50*	*63.4*	*95.1*		
ND	22	*30*	76.0	64.3	26.7	50	92.6	101.9	ATV630D22M3	27.300/ *60.186*
HD	*18.5*	*25*	*64.8*	*54.5*	*22.7*	*50*	*78.4*	*117.6*		
ND	30	*40*	104.7	88.6	36.8	50	123	135.3	ATV630D30M3	56.600/ *124.781*
HD	*22*	*30*	*78.3*	*67.1*	*27.9*	*50*	*92.6*	*138.9*		
ND	37	*50*	128.0	107.8	44.8	50	149	163.9	ATV630D37M3	56.600/ *124.781*
HD	*30*	*40*	*104.7*	*88.6*	*36.8*	*50*	*123*	*184.5*		
ND	45	*60*	155.1	130.4	54.2	50	176	193.6	ATV630D45M3	56.600/ *124.781*
HD	*37*	*50*	*128.5*	*108.5*	*45.1*	*50*	*149*	*223.5*		
ND	55	*75*	189	161	61.1	50	211	232.1	ATV630D55M3 (6)	84.000/ *185.188*
HD	*45*	*60*	*156*	*134*	*50*	*50*	*176*	*264*		
ND	75	*100*	256	215	83.7	50	282	310.2	ATV630D75M3 (6)	84.000/ *185.188*
HD	*55*	*75*	*189*	*161*	*61.1*	*50*	*211*	*316.5*		

*(1) Altivar Process **ATV630U07M3...D75M3** drives have been designed without an EMC filter. An additional filter can be added to help meet more stringent requirements and reduce electromagnetic emissions.*

*(2) These values are given for a nominal switching frequency of 4 kHz up to **ATV630D22M3** or 2.5 kHz for **ATV630D30M3...D75M3**, for use in continuous operation.*
The switching frequency is adjustable from 2…12 kHz for all ratings.
Above 2.5 or 4 kHz (depending on the rating), the drive will automatically reduce the switching frequency in the event of an excessive temperature rise. For continuous operation above the nominal switching frequency, derate the nominal drive current (see the derating curves in the Installation Manual).

(3) Typical value for the indicated motor power and for the maximum prospective line Isc.

(4) Values given for applications requiring a slight overload (up to 110%).

(5) Values given for applications requiring a significant overload (up to 150%).

(6) Product supplied as IP00 for mounting in an enclosure. For IP21 wall mounting, order the IP21/UL Type 1 conformity kit VW3A9704 separately.

***Note**: Consult the summary tables of possible drive, option, and accessory combinations (see page 2/18).*

Variable speed drives

Altivar Process ATV600

Three-phase supply voltage: 380...480 V 50/60 Hz
Wall-mounting drives

ATV630D15N4

ATV630D30N4

380...480 V (-15...10%) IP21/UL Type 1 drives

Motor			Line supply				Altivar Process			
Power indicated on rating plate (1)			Line current (2)		Apparent power	Maximum prospective line Isc	Max. continuous current (1)	Max. transient current for 60 s	Reference (5)	Weight
			380 V	480 V	380 V					
ND:	Normal duty (3)									
HD:	Heavy duty (4)									
	kW	HP	A	A	kVA	kA	A	A		kg/ lb
With category C2 integrated EMC filter										
ND	0.75	1	1.5	1.3	1.1	50	2.2	2.4	ATV630U07N4	4.500/ 9.921
HD	0.37	0.5	0.9	0.8	0.7	50	1.5	2.3		
ND	1.5	2	3	2.6	2.2	50	4	4.4	ATV630U15N4	4.500/ 9.921
HD	0.75	1	1.7	1.5	1.2	50	2.2	3.3		
ND	2.2	3	4.3	3.8	3.2	50	5.6	6.2	ATV630U22N4	4.500/ 9.921
HD	1.5	2	3.1	2.9	2.4	50	4	6		
ND	3	–	5.8	5.1	4.2	50	7.2	7.9	ATV630U30N4	4.600/ 10.141
HD	2.2	3	4.5	4	3.3	50	5.6	8.4		
ND	4	5	7.6	6.7	5.6	50	9.3	10.2	ATV630U40N4	4.600/ 10.141
HD	3	–	6	5.4	4.5	50	7.2	10.8		
ND	5.5	7.5	10.4	9.1	7.6	50	12.7	14	ATV630U55N4	4.700/ 10.362
HD	4	5	8	7.2	6.0	50	9.3	14		
ND	7.5	10	13.8	11.9	9.9	50	16.5	18.2	ATV630U75N4	7.700/ 16.976
HD	5.5	7.5	10.5	9.2	7.6	50	12.7	19.1		
ND	11	15	19.8	17	14.1	50	23.5	25.9	ATV630D11N4	7.700/ 16.976
HD	7.5	10	14.1	12.5	10.4	50	16.5	24.8		
ND	15	20	27	23.3	19.4	50	31.7	34.9	ATV630D15N4	13.600/ 29.983
HD	11	15	20.6	18.1	15.0	50	23.5	35.3		
ND	18.5	25	33.4	28.9	24	50	39.2	43.1	ATV630D18N4	14.200/ 31.306
HD	15	20	27.7	24.4	20.3	50	31.7	47.6		
ND	22	30	39.6	34.4	28.6	50	46.3	50.9	ATV630D22N4	14.300/ 31.526
HD	18.5	25	34.1	29.9	24.9	50	39.2	58.8		
ND	30	40	53.3	45.9	38.2	50	61.5	67.7	ATV630D30N4	28.000/ 61.729
HD	22	30	40.5	35.8	29.8	50	46.3	69.5		
ND	37	50	66.2	57.3	47.6	50	74.5	82	ATV630D37N4	28.200/ 62.170
HD	30	40	54.8	48.3	40.2	50	61.5	92.3		
ND	45	60	79.8	69.1	57.4	50	88	96.8	ATV630D45N4	28.700/ 63.273
HD	37	50	67.1	59.0	49.1	50	74.5	111.8		

(1) These values are given for use in continuous operation with a nominal switching frequency of 4 kHz (ATV630U07N4...D45N4).
The switching frequency is adjustable from 2…12 kHz (ATV630U07N4...D45N4).
Above the nominal switching frequency, the drive will automatically reduce the switching frequency in the event of an excessive temperature rise.
For continuous operation above the nominal switching frequency, nominal drive current should be derated according to the derating curves in the Installation Manual.
(2) Typical value for the indicated motor power and for the maximum prospective line Isc.
(3) Values given for applications requiring a slight overload (up to 110%).
(4) Values given for applications requiring a significant overload (up to 150%).
(5) For ATV630●●●N4Z cabinet integration products, see pages 3/6 and 3/7 in the cabinet integration section.

Note: Consult the summary tables of possible drive, option, and accessory combinations (see page 2/18).

Variable speed drives

Altivar Process ATV600

Three-phase supply voltage: 380...480 V 50/60 Hz
Wall-mounting drives

ATV630D55N4

ATV630C25N4

380...480 V (-15...10%) IP21/UL Type 1 drives

Motor			Line supply				Altivar Process			
Power indicated on rating plate (1)			Line current (2)		Apparent power	Maximum prospective line Isc	Max. continuous current (1)	Max. transient current for 60 s	Reference (5)	Weight
			380 V	480 V	380 V					
ND:	Normal duty (3)									
HD:	Heavy duty (4)									
	kW	HP	A	A	kVA	kA	A	A		kg/ lb
With category C3 integrated EMC filter										
ND	55	75	97.2	84.2	70	50	106	116.6	ATV630D55N4	56.500/ 124.561
HD	45	60	81.4	71.8	59.7	50	88	132		
ND	75	100	131.3	112.7	93.7	50	145	159.5	ATV630D75N4	58.000/ 127.868
HD	55	75	98.9	86.9	72.2	50	106	159		
ND	90	125	156.2	135.8	112.9	50	173	190.3	ATV630D90N4	58.500/ 128.970
HD	75	100	134.3	118.1	98.2	50	145	217.5		
ND	110	150	201	165	121.8	50	211	232.1	ATV630C11N4 (6)	82.000/ 180.779
HD	90	125	170	143	102.6	50	173	259.5		
ND	132	200	237	213	161.4	50	250	275	ATV630C13N4 (6)	82.000/ 180.779
HD	110	150	201	165	121.8	50	211	317		
ND	160	250	284	262	201.3	50	302	332.2	ATV630C16N4 (6)	82.000/ 180.779
HD	132	200	237	213	161.4	50	250	375		
ND	220	350	397	324	247	50	427	470	ATV630C22N4 (6)	163.000/ 359.353
HD	160	250	296	246	187	50	302	453		
ND	250	400	451	366	279	50	481	529	ATV630C25N4 (6)	207.000/ 456.357
HD	220	300	365	301	229	50	387	581		
ND	315	500	569	461	351	50	616	678	ATV630C31N4 (6)	207.000/ 456.357
HD	250	400	457	375	286	50	481	722		

(1) These values are given for use in continuous operation with a nominal switching frequency of 2.5 kHz (ATV630D55N4...C31N4).
The switching frequency is adjustable from 2…8 kHz (ATV630D55N4...C31N4).
Above the nominal switching frequency, the drive will automatically reduce the switching frequency in the event of an excessive temperature rise.
For continuous operation above the nominal switching frequency, nominal drive current should be derated according to the derating curves in the Installation Manual.
(2) Typical value for the indicated motor power and for the maximum prospective line Isc.
(3) Values given for applications requiring a slight overload (up to 110%).
(4) Values given for applications requiring a significant overload (up to 150%).
(5) For ATV630●●●N4Z cabinet integration products, see pages 3/6 and 3/7 in the cabinet integration section.
(6) Product supplied as IP00 for mounting in an enclosure. For IP21/UL Type1 wall mounting, an adaptation kit should be ordered separately (see page 2/13).

Note: Consult the summary tables of possible drive, option, and accessory combinations (see page 2/18).

Variable speed drives

Altivar Process ATV600

Three-phase supply voltage: 380...480 V 50/60 Hz
Wall-mounting drives

ATV650D15N4

ATV650D30N4

ATV650D55N4

380...480 V (-15...10%) IP55 drives with category C2 or C3 integrated EMC filter (1)

Motor			Line supply				Altivar Process			
Power indicated on rating plate (2)			Line current (3)		Apparent power	Maximum prospective line Isc	Maximum continuous current (2)	Max. transient current for 60 s	Reference (6)	Weight
			380 V	480 V	380 V					
ND:	Normal duty (4)									
HD:	Heavy duty (5)									
	kW	HP	A	A	kVA	kA	A	A		kg/lb
THDi ≤ 44% at 100% load in Normal duty (4)										
ND	0.75	1	1.5	1.3	1.1	50	2.2	2.4	ATV650U07N4	10.500/23.149
HD	0.37	0.5	0.9	0.8	0.7	50	1.5	2.3		
ND	1.5	2	3	2.6	2.2	50	4	4.4	ATV650U15N4	10.500/23.149
HD	0.75	1	1.7	1.5	1.2	50	2.2	3.3		
ND	2.2	3	4.3	3.8	3.2	50	5.6	6.2	ATV650U22N4	10.500/23.149
HD	1.5	2	3.1	2.9	2.4	50	4	6		
ND	3	–	5.8	5.1	4.2	50	7.2	7.9	ATV650U30N4	10.600/23.369
HD	2.2	3	4.5	4	3.3	50	5.6	8.4		
ND	4	5	7.6	6.7	5.6	50	9.3	10.2	ATV650U40N4	10.600/23.369
HD	3	–	6	5.4	4.5	50	7.2	10.8		
ND	5.5	7.5	10.4	9.1	7.6	50	12.7	14	ATV650U55N4	10.700/23.589
HD	4	5	8	7.2	6.0	50	9.3	14		
ND	7.5	10	13.8	11.9	9.9	50	16.5	18.2	ATV650U75N4	13.700/30.203
HD	5.5	7.5	10.5	9.2	7.6	50	12.7	19.1		
ND	11	15	19.8	17	14.1	50	23.5	25.9	ATV650D11N4	13.700/30.203
HD	7.5	10	14.1	12.5	10.4	50	16.5	24.8		
ND	15	20	27	23.3	19.4	50	31.7	34.9	ATV650D15N4	19.600/43.211
HD	11	15	20.6	18.1	15	50	23.5	35.3		
ND	18.5	25	33.4	28.9	24	50	39.2	43.1	ATV650D18N4	20.600/45.415
HD	15	20	27.7	24.4	20.3	50	31.7	47.6		
ND	22	30	39.6	34.4	28.6	50	46.3	50.9	ATV650D22N4	20.600/45.415
HD	18.5	25	34.1	29.9	24.9	50	39.2	58.8		
ND	30	40	53.3	45.9	38.2	50	61.5	67.7	ATV650D30N4	50.000/110.231
HD	22	30	40.5	35.8	29.8	50	46.3	69.5		
ND	37	50	66.2	57.3	47.6	50	74.5	82	ATV650D37N4	50.000/110.231
HD	30	40	54.8	48.3	40.2	50	61.5	92.3		
ND	45	60	79.8	69.1	57.4	50	88	96.8	ATV650D45N4	50.000/110.231
HD	37	50	67.1	59	49.1	50	74.5	111.8		
ND	55	75	97.2	84.2	70	50	106	116.6	ATV650D55N4	87.000/191.802
HD	45	60	81.4	71.8	59.7	50	88	132		
ND	75	100	131.3	112.7	93.7	50	145	159.5	ATV650D75N4	87.000/191.802
HD	55	75	98.9	86.9	72.2	50	106	159		
ND	90	125	156.2	135.8	112.9	50	173	190.3	ATV650D90N4	87.000/191.802
HD	75	100	134.3	118.1	98.2	50	145	217.5		

*(1) Category C2 EMC filter for **ATV650U07N4...D45N4**. Category C3 EMC filter above **ATV650D45N4**.*
*(2) These values are given for a nominal switching frequency of 4 kHz adjustable from 2...12 kHz up to **ATV650D45N4** or 2.5 kHz adjustable from 2…8 kHz for **ATV650D55N4...D90N4**, for use in continuous operation.*
Above 2.5 or 4 kHz (depending on the rating), the drive will automatically reduce the switching frequency in the event of an excessive temperature rise. For continuous operation above the nominal switching frequency, derate the nominal drive current (see the derating curves in the Installation Manual).
(3) Typical value for the indicated motor power and for the maximum prospective line Isc.
(4) Values given for applications requiring a slight overload (up to 110%).
(5) Values given for applications requiring a significant overload (up to 150%).
(6) Supplied with cable gland.

***Note**: Consult the summary tables of possible drive, option, and accessory combinations (see page 2/20).*

Variable speed drives

Altivar Process ATV600

Three-phase supply voltage: 380...480 V 50/60 Hz
Wall-mounting drives

ATV650D15N4E

ATV650D30N4E

ATV650D55N4E

380...480 V (-15...10%) IP55 drives with Vario disconnect switch and category C2 or C3 integrated EMC filter (1)

Motor			Line supply				Altivar Process			
Power indicated on rating plate (2)			Line current (3)		Apparent power	Maximum prospective line Isc	Maximum continuous current (2)	Max. transient current for 60 s	Reference (6)	Weight
			380 V	480 V	380 V					
ND:	Normal duty (4)									
HD:	Heavy duty (5)									
	kW	HP	A	A	kVA	kA	A	A		kg/lb
THDi ≤ 44% at 100% load in Normal duty (4)										
ND	0.75	1	1.5	1.3	1.1	50	2.2	2.4	ATV650U07N4E	10.500/23.149
HD	0.37	0.5	0.9	0.8	0.7	50	1.5	2.3		
ND	1.5	2	3	2.6	2.2	50	4	4.4	ATV650U15N4E	10.500/23.149
HD	0.75	1	1.7	1.5	1.2	50	2.2	3.3		
ND	2.2	3	4.3	3.8	3.2	50	5.6	6.2	ATV650U22N4E	10.500/23.149
HD	1.5	2	3.1	2.9	2.4	50	4	6		
ND	3	–	5.8	5.1	4.2	50	7.2	7.9	ATV650U30N4E	10.600/23.369
HD	2.2	3	4.5	4	3.3	50	5.6	8.4		
ND	4	5	7.6	6.7	5.6	50	9.3	10.2	ATV650U40N4E	10.600/23.369
HD	3	–	6	5.4	4.5	50	7.2	10.8		
ND	5.5	7.5	10.4	9.1	7.6	50	12.7	14	ATV650U55N4E	10.700/23.589
HD	4	5	8	7.2	6.0	50	9.3	14		
ND	7.5	10	13.8	11.9	9.9	50	16.5	18.2	ATV650U75N4E	13.700/30.203
HD	5.5	7.5	10.5	9.2	7.6	50	12.7	19.1		
ND	11	15	19.8	17	14.1	50	23.5	25.9	ATV650D11N4E	13.700/30.203
HD	7.5	10	14.1	12.5	10.4	50	16.5	24.8		
ND	15	20	27	23.3	19.4	50	31.7	34.9	ATV650D15N4E	19.600/43.211
HD	11	15	20.6	18.1	15	50	23.5	35.3		
ND	18.5	25	33.4	28.9	24	50	39.2	43.1	ATV650D18N4E	20.600/45.415
HD	15	20	27.7	24.4	20.3	50	31.7	47.6		
ND	22	30	39.6	34.4	28.6	50	46.3	50.9	ATV650D22N4E	20.600/45.415
HD	18.5	25	34.1	29.9	24.9	50	39.2	58.8		
ND	30	40	53.3	45.9	38.2	50	61.5	67.7	ATV650D30N4E	50.000/110.231
HD	22	30	40.5	35.8	29.8	50	46.3	69.5		
ND	37	50	66.2	57.3	47.6	50	74.5	82	ATV650D37N4E	50.000/110.231
HD	30	40	54.8	48.3	40.2	50	61.5	92.3		
ND	45	60	79.8	69.1	57.4	50	88	96.8	ATV650D45N4E	50.000/110.231
HD	37	50	67.1	59	49.1	50	74.5	111.8		
ND	55	75	97.2	84.2	70	50	106	116.6	ATV650D55N4E	87.000/191.802
HD	45	60	81.4	71.8	59.7	50	88	132		
ND	75	100	131.3	112.7	93.7	50	145	159.5	ATV650D75N4E	87.000/191.802
HD	55	75	98.9	86.9	72.2	50	106	159		
ND	90	125	156.2	135.8	112.9	50	173	190.3	ATV650D90N4E	87.000/191.802
HD	75	100	134.3	118.1	98.2	50	145	217.5		

*(1) Category C2 EMC filter for **ATV650U07N4E...D45N4E**. Category C3 EMC filter above **ATV650D45N4E**.*
*(2) These values are given for a nominal switching frequency of 4 kHz adjustable from 2...12 kHz up to **ATV650D45N4E** or 2.5 kHz adjustable from 2…8 kHz for **ATV650D55N4E...D90N4E**, for use in continuous operation.*
Above 2.5 or 4 kHz (depending on the rating), the drive will automatically reduce the switching frequency in the event of an excessive temperature rise. For continuous operation above the nominal switching frequency, derate the nominal drive current (see the derating curves in the Installation Manual).
(3) Typical value for the indicated motor power and for the maximum prospective line Isc.
(4) Values given for applications requiring a slight overload (up to 110%).
(5) Values given for applications requiring a significant overload (up to 150%).
(6) Supplied with cable gland.

***Note**: Consult the summary tables of possible drive, option, and accessory combinations (see page 2/20).*

Variable speed drives

Altivar Process ATV600

Three-phase supply voltage: 500...690 V 50/60 Hz
Wall-mounting drives

ATV630U22Y6

ATV630D37Y6

500...690 V (-15...10%) IP00 drives (1)

Motor					Line supply				Altivar Process			
Power indicated on rating plate (2)					Line current (3)		Apparent power	Maximum prospective line Isc	Max. continuous current (2)	Max. transient current for 60 s	Reference	Weight
ND:	Normal duty (4)				500 V	690 V	690 V					
HD:	*Heavy duty (5)*											
Supply voltage	500 V		690 V									
	kW	*HP*	kW	*HP*	A	A	kVA	kA	A	A		kg/ *lb*
With category C3 integrated EMC filter												
ND	1.5	2	2.2	3	3.4	3.6	4.3	70	3.1	3.4	ATV630U22Y6	22.000/ *48.502*
HD	*1.1*	*1.5*	*1.5*	*2*	*2.6*	*2.6*	*3.1*	*70*	*2.4*	*3.6*		
ND	2.2	3	3	–	4.7	4.8	5.7	70	4.2	4.6	ATV630U30Y6	22.000/ *48.502*
HD	*1.5*	*2*	*2.2*	*3*	*3.4*	*3.6*	*4.3*	*70*	*3.1*	*4.7*		
ND	3	–	4	5	6.2	6.1	7.3	70	5.4	5.9	ATV630U40Y6	22.000/ *48.502*
HD	*2.2*	*3*	*3*	*–*	*4.7*	*4.8*	*5.7*	*70*	*4.2*	*6.3*		
ND	4	5	5.5	7.5	7.9	8	9.6	70	7.2	7.9	ATV630U55Y6	22.000/ *48.502*
HD	*3*	*–*	*4*	*5*	*6.2*	*6.1*	*7.3*	*70*	*5.4*	*8.1*		
ND	5.5	7.5	7.5	10	10.4	10.5	12.5	70	9.5	10.5	ATV630U75Y6	22.000/ *48.502*
HD	*4*	*5*	*5.5*	*7.5*	*7.9*	*8*	*9.6*	*70*	*7.2*	*10.8*		
ND	7.5	10	11	15	13.6	14.7	17.6	70	13.5	14.9	ATV630D11Y6	22.000/ *48.502*
HD	*5.5*	*7.5*	*7.5*	*10*	*10.4*	*10.5*	*12.5*	*70*	*9.5*	*14.3*		
ND	11	15	15	20	18.4	19.2	22.9	70	18	19.8	ATV630D15Y6	22.000/ *48.502*
HD	*7.5*	*10*	*11*	*15*	*13.6*	*14.7*	*17.6*	*70*	*13.5*	*20.3*		
ND	15	20	18.5	25	23.1	23	27.5	70	24	26.4	ATV630D18Y6	22.000/ *48.502*
HD	*11*	*15*	*15*	*20*	*18.4*	*19.2*	*22.9*	*70*	*18*	*27.0*		
ND	18.5	25	22	30	27.6	26	31.1	70	29	31.9	ATV630D22Y6	22.000/ *48.502*
HD	*15*	*20*	*18.5*	*25*	*23.2*	*23*	*27.5*	*70*	*24*	*36.0*		
ND	22	30	30	40	32.1	32.8	39.2	70	34	37.4	ATV630D30Y6	22.000/ *48.502*
HD	*18.5*	*25*	*22*	*30*	*27.6*	*26*	*31.1*	*70*	*29*	*43.5*		
ND	30	40	37	50	47.2	46.2	55.2	70	45	49.5	ATV630D37Y6	53.000/ *116.845*
HD	*22*	*30*	*30*	*40*	*37.7*	*38.5*	*46.0*	*70*	*34*	*51.0*		
ND	37	50	45	60	55.6	54.4	65.0	70	55	60.5	ATV630D45Y6	53.000/ *116.845*
HD	*30*	*40*	*37*	*50*	*47.2*	*46.2*	*55.2*	*70*	*45*	*67.5*		
ND	45	60	55	75	65.5	62.5	74.7	70	66	72.6	ATV630D55Y6	53.000/ *116.845*
HD	*37*	*50*	*45*	*60*	*55.6*	*54.4*	*65.0*	*70*	*55*	*82.5*		
ND	55	75	75	100	82.7	87.7	104.8	70	83	91.3	ATV630D75Y6	53.000/ *116.845*
HD	*45*	*60*	*55*	*75*	*71*	*68.5*	*81.9*	*70*	*66*	*99.0*		
ND	75	100	90	125	108.3	99.4	118.8	70	108	118.8	ATV630D90Y6	53.000/ *116.845*
HD	*55*	*75*	*75*	*100*	*82.7*	*87.7*	*104.8*	*70*	*83*	*124.5*		

(1) Product supplied as IP00 for mounting in an enclosure. For IP20/UL Type1 wall mounting, an adaptation kit should be ordered separately (see page 60822/13).

*(2) These values are given for use in continuous operation with a nominal switching frequency between 2.5 kHz (**ATV630D37Y6**...**D90Y6**) and 4 kHz (**ATV630U22Y6**...**D30Y6**). The switching frequency is adjustable from 1…4.9 kHz (**ATV630D37Y6**...**D90Y6**) to 2…8 kHz (**ATV630U22Y6**...**D30Y6**).*
Above the nominal switching frequency, the drive will automatically reduce the switching frequency in the event of an excessive temperature rise.
For continuous operation above the nominal switching frequency, nominal drive current should be derated according to the derating curves in the Installation Manual.

(3) Typical value for the indicated motor power and for the maximum prospective line Isc.

(4) Values given for applications requiring a slight overload (up to 110%).

(5) Values given for applications requiring a significant overload (up to 150%).

***Note:** Consult the summary tables of possible drive, option, and accessory combinations (see page 2/18).*

Variable speed drives

Altivar Process ATV600

Three-phase supply voltage: 380...440 V 50/60 Hz
Floor-standing drives without braking unit

ATV630C16N4F

380...440 V (-15...10%) IP21 drives with category C3 integrated EMC filter (1)										
Motor			Line supply				Altivar Process			
Power indicated on rating plate (2)			Line current (3)		Apparent power	Maximum prospective line Isc	Maximum continuous current (2)	Max. transient current for 60 s	Reference	Weight
			380 V	400 V	380 V					
ND:	Normal duty (4)									
HD:	*Heavy duty (5)*									
	kW	*HP*	A	A	kVA	kA	A	A		kg/ *lb*
THDi ≤ 44% at 100% load in Normal duty (4)										
ND	*110*	–	*207*	*195*	*135*	50	*211*	*232*	ATV630C11N4F	300.000/ *661.386*
HD	*90*	–	*174*	*164*	*113*	*50*	*173*	*259*		
ND	*132*	–	*250*	*232*	*161*	50	*250*	*275*	ATV630C13N4F	300.000/ *661.386*
HD	*110*	–	*207*	*197*	*136*	*50*	*211*	*316*		
ND	*160*	–	*291*	*277*	*192*	50	*302*	*332*	ATV630C16N4F	300.000/ *661.386*
HD	*132*	–	*244*	*232*	*161*	*50*	*250*	*375*		
ND	200	–	369	349	242	50	370	407	ATV630C20N4F	400.000/ *881.848*
HD	*160*	–	*302*	*286*	*198*	*50*	*302*	*453*		
ND	250	–	453	432	299	50	477	524	ATV630C25N4F	400.000/ *881.848*
HD	*200*	–	*369*	*353*	*244*	*50*	*370*	*555*		
ND	315	–	566	538	373	50	590	649	ATV630C31N4F	400.000/ *881.848*
HD	*250*	–	*453*	*432*	*299*	*50*	*477*	*715*		

(1) Integrated motor chokes allowing a shielded motor cable length up to 300 m/984 ft in category C3 and an unshielded cable length up to 450 m/1,476 ft in category C4.

(2) These values are given for a nominal switching frequency of 2.5 kHz for use in continuous operation.
The switching frequency is adjustable from 2…8 kHz for all ratings.
Above 2.5 kHz, the drive will automatically reduce the switching frequency in the event of an excessive temperature rise. For continuous operation above the nominal switching frequency, derate the nominal drive current (see the derating curves in the Installation Manual).

(3) Typical value for the indicated motor power and for the maximum prospective line Isc.

(4) Values given for applications requiring a slight overload (up to 110%).

(5) Values given for applications requiring a significant overload (up to 150%).

***Note**: Consult the summary tables of possible drive, option, and accessory combinations (see page 2/18).*

Variable speed drives

Altivar Process ATV600

Three-phase supply voltage: 380...440 V 50/60 Hz
Floor-standing drives without braking unit

ATV650C31N4F

380...440 V (-15...10%) IP54 drives with switch and category C3 integrated EMC filter (1)										
Motor			Line supply				Altivar Process			
Power indicated on rating plate (2)			Line current (3)		Apparent power	Maximum prospective line Isc	Maximum continuous current (2)	Max. transient current for 60 s	Reference	Weight
			380 V	400 V	380 V					
ND:	Normal duty (4)									
HD:	Heavy duty (5)									
	kW	HP	A	A	kVA	kA	A	A		kg/ lb
THDi ≤ 44% at 100% load in Normal duty (4)										
ND	110	–	207	195	135	50	211	232	ATV650C11N4F	310.000/ 683.433
HD	90	–	174	164	113	50	173	259		
ND	132	–	250	232	161	50	250	275	ATV650C13N4F	310.000/ 683.433
HD	110	–	207	197	136	50	211	316		
ND	160	–	291	277	192	50	302	332	ATV650C16N4F	310.000/ 683.433
HD	132	–	244	232	161	50	250	375		
ND	200	–	369	349	242	50	370	407	ATV650C20N4F	420.000/ 925.941
HD	160	–	302	286	198	50	302	453		
ND	250	–	453	432	299	50	477	524	ATV650C25N4F	420.000/ 925.941
HD	200	–	369	353	244	50	370	555		
ND	315	–	566	538	373	50	590	649	ATV650C31N4F	420.000/ 925.941
HD	250	–	453	432	299	50	477	715		

(1) Integrated motor chokes allowing a shielded motor cable length up to 300 m/984 ft in category C3 and an unshielded cable length up to 450 m/1,476 ft in category C4.

(2) These values are given for a nominal switching frequency of 2.5 kHz for use in continuous operation.
The switching frequency is adjustable from 2…8 kHz for all ratings.
Above 2.5 kHz, the drive will automatically reduce the switching frequency in the event of an excessive temperature rise. For continuous operation above the nominal switching frequency, derate the nominal drive current (see the derating curves in the Installation Manual).

(3) Typical value for the indicated motor power and for the maximum prospective line Isc.

(4) Values given for applications requiring a slight overload (up to 110%).

(5) Values given for applications requiring a significant overload (up to 150%).

***Note**: Consult the summary tables of possible drive, option, and accessory combinations (see page 2/18).*

Variable speed drives

Altivar Process ATV600

Replacement parts

F19_FAN_CPSCT17001

VX5VPS3002

F19_FAN_CPSCT17002

VX5VPS5002

Description	Corresponding drive	Reference	Weight kg/*lb*
Fan kit for wall-mounting drives			
Power fan for IP21 and IP55 drives, bracket, instruction sheets	ATV630U07M3...U40M3, ATV630U07N4...U55N4, ATV650U07N4...U55N4, ATV650U07N4E...U55N4E	VX5VPS1001	–
	ATV630U55M3, ATV630U75N4...D11N4, ATV650U75N4...D11N4, ATV650U75N4E...D11N4E	VX5VPS2001	–
	ATV630U75M3...D11M3, ATV630D15N4...D22N4, ATV650D15N4...D22N4, ATV650D15N4E...D22N4E	VX5VPS3001	–
	ATV630U22Y6...D30Y6	VX5VPS3002	–
	ATV630D15M3...D22M3, ATV630D30N4...D45N4, ATV650D30N4...D45N4, ATV650D30N4E...D45N4E	VX5VPS4001	–
	ATV630D30M3...D45M3, ATV630D55N4...D90N4, ATV650D55N4...D90N4, ATV650D55N4E...D90N4E	VX5VPS5001	–
	ATV630D37Y6...D90Y6	VX5VPS5002	–
	ATV630C11N4...C16N4	VX5VPS6001	–
	ATV630C22N4...C31N4	VZ3V1212 *(1)*	–
		VZ3V1213 *(2)*	–
Control fan for IP55 drives, bracket, instruction sheets	ATV650U07N4...D22N4, ATV650U07N4E...D22N4E	VX5VP50A001	–
	ATV650D30N4...D90N4, ATV650D30N4E...D90N4E	VX5VP50BC001	–
Fan kit for floor-standing drives			
Power fan, bracket, instruction sheets	ATV630C11N4F...C31N4F, ATV650C11N4F...C31N4F	VX5VPM001	–
Door fan, bracket, instruction sheets	ATV630C11N4F...C31N4F, ATV650C11N4F...C31N4F	VX5VPM002	–
Enclosure grid filter pads			
223 x 223 mm/ *8.78 x 8.78 in.* enclosure grid filter pad	ATV650C11N4F...C16N4F	NSYCAF223	–
291 x 291 mm/ *11.46 x 11.46 in.* enclosure grid filter pad	ATV650C20N4F...C31N4F	NSYCAF291	–

(1) Electronic power fan for drive, with 1 unit for ATV630C22N4, 2 units for ATV630C25N4, and 3 units for ATV630C31N4.

(2) Internal fan for drive, with 1 unit for ATV630C22N4, 2 units for ATV630C25N4, and 3 units for ATV630C31N4.

Universal Enclosures catalog

Accessories for flange mounting

Description	Corresponding kit or drive *(1)*	Enclosure max.height (mm/*in.*)	Enclosure max. width (mm/*in.*)	Reference	Weight kg/*lb*
Flange-mounting kit for separate air flow *(2)*. **For details of kit contents please consult the product page on our website**	ATV630U07M3...U40M3, ATV630U07N4...U55N4	360/*14.17*	235/*9.25*	NSYPTDS1	
	ATV630U55M3, ATV630U75N4...D11N4	420/*16.54*	265/*10.43*	NSYPTDS2	–
	ATV630U75M3...D11M3, ATV630D15N4...D22N4	555/*21.85*	295/*11.61*	NSYPTDS3	–
	ATV630D15M3...D22M3, ATV630D30N4...D45N4	800/*31.50*	385/*15.16*	NSYPTDS4	–
	ATV630D30M3...D45M3 ATV630D55N4...D90N4	975/*38.39*	427/*16.81*	NSYPTDS5	–
	ATV630C11N4...C16N4 ATV630D55M3...D75M3	–	–	VW3A95116	–
	ATV630C22N4	–	–	VW3A9513	–
	ATV630C25N4 ATV630C31N4	–	–	VW3A9514	–

ATV340_OP2073

Flange-mounting kit installed inside cabinet

IP20 and IP21/UL Type 1 conformity kits

Description	Corresponding drive	Reference	Weight kg/*lb*
IP20/UL Type 1 conformity kit: housing, fixing accessories, instruction sheet	ATV630U22Y6...D30Y6	VW3A9705	–
	ATV630D37Y6...D90Y6	VW3A9706	–
IP21/UL Type 1 conformity kit: metal conduit box, fixing accessories, instruction sheet	ATV630D55M3...D75M3 ATV630C11N4...C16N4	VW3A9704	–
UL Type 1 conformity kit: cover, casing, plates, fixing accessories, instruction sheet	ATV630C22N4	VW3A9212	–
	ATV630C25N4 ATV630C31N4	VW3A9213	–

F19_ACC_CPSCT17006

VW3A9705

IP31 conformity kits

Description	Corresponding drive	Reference	Weight kg/*lb*
IP31 conformity kit: EMC plate, cover, casing, fixing accessories, instruction sheet	ATV630C22N4	VW3A9112	–
	ATV630C25N4 ATV630C31N4	VW3A9113	–

(1) All accessories designed for use with N4 suffix products ATV630U07N4...U75N4 and ATV630D11N4...D90N4 can also be used with their ...N4Z suffix equivalent products.

(2) RUE-2192 patented system.

2

Graphic display terminal
(example shows dynamic pump operation in relation to its optimum operation)

Detected fault: The screen's red backlight is activated automatically

Embedded dynamic QR codes for contextual, instantaneous access to online help

Scanning the QR code from a smartphone or tablet

Instant access to online help

Graphic display terminal (supplied with the drive)

This terminal can be:
- Connected and mounted on the front of the drive
- Connected and mounted on an enclosure door using a remote mounting accessory
- Connected to a PC to exchange files via a Mini USB/USB connection *(1)*
- Connected to several drives in multidrop mode (see page 2/15)

This terminal is used to:
- Control, adjust, and configure the drive
- Display current values (motor, I/O, and process data)
- Display graphic dashboards such as the energy consumption monitoring dashboard
- Store and download configurations (several configuration files can be stored in the 16 MB memory)
- Duplicate the configuration of one powered-up drive on another powered-up drive
- Copy configurations from a PC or drive and duplicate them on another drive (the drives must be powered on for the duration of the duplication operations)

Other characteristics:
- Up to 24 languages (complete alphabets) covering the majority of countries around the world (languages can be removed, added, and updated according to user requirements; consult the graphic display terminal page on our website)
- 2-color backlit display (white and red); if an error is detected, the red backlight is activated automatically (function can be disabled)
- Operating range: -15…50 °C/+5…122 °F
- Degree of protection: IP65
- Trend curves: Graphic display of changes over time in monitoring variables, energy data, and process data
- Graphic display of a pump's dynamic operation in relation to its optimum operation
- Embedded dynamic QR codes for contextual, instantaneous access to online help (diagnostics and settings, etc.) using a smartphone or tablet
- Real-time clock with 10-year backup battery providing data acquisition and event timestamping functions even when the drive is stopped

Description

Display:
- 8 lines, 240 x 160 pixels
- Displays bar charts, gauges, and trend charts
- 4 function keys to facilitate navigation and provide contextual links for enabling functions
- "STOP/RESET" button: Local control of motor stop command/clearing detected faults
- "RUN" button: Local control of motor run command
- Navigation buttons:
  - OK button: Saves the current value (ENT)
  - Turn ±: Increases or decreases the value, goes to the next or previous line
  - "ESC" button: Aborts a value, parameter, or menu to return to the previous selection
  - Home: Root menu
  - Information (i): Contextual help

References

Description	Reference	Weight kg/ *lb*
Graphic display terminal	VW3A1111	0.200/ *0.441*

Communication accessory

Description	Reference	Weight kg/ *lb*
Wi-Fi dongle Portable battery powered Wi-Fi access point for Wi-Fi equipment (PC, tablet, smartphone, etc.)	TCSEGWB131W	0.134/ *0.295*

(1) Graphic display terminal used only as a handheld terminal.

Remote mounting kit for mounting graphic display terminal on enclosure door (front panel)

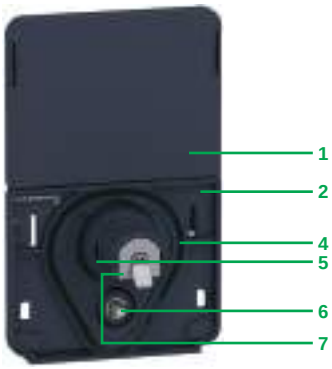

Remote mounting kit for graphic display terminal (rear panel)

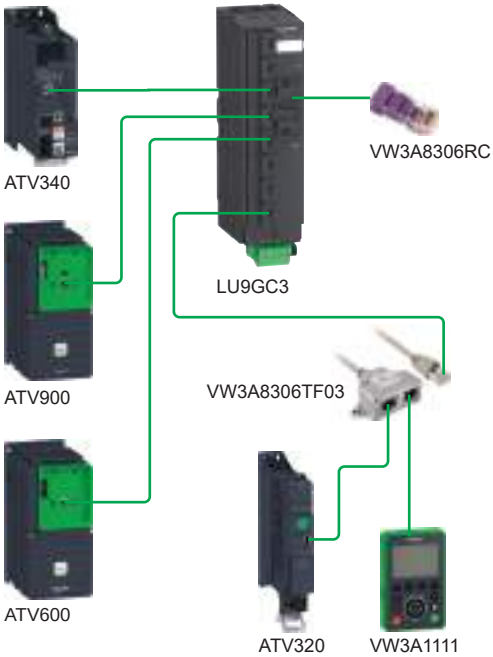

Example of multipoint screen architecture

Accessories for graphic display terminal

- Remote mounting kit for mounting on enclosure door with IP65/UL Type 12 protection rating as standard

The kit comprises:

– Tightening tool (also sold separately under the reference ZB5AZ905)
1 Cover plate to maintain IP65 protection when there is no terminal connected
2 Mounting plate
3 RJ45 port for the graphic display terminal
4 Seal
5 Fixing nut
6 Anti-rotation pin
7 RJ45 port for connecting the remote-mounting cordset (10 m/*33 ft* maximum); Cordsets should be ordered separately depending on the length required.
8 Grounding connector

Drilling a hole with a standard Ø 22 tool, as used for a pushbutton, allows the unit to be mounted without needing a cut-out in the enclosure (Ø 22.5 mm/*Ø 0.89 in.* drill hole).

References

Description	Length m/ *ft*	IP rating	Reference	Weight kg/ *lb*
Remote mounting kit Order with remote-mounting cordset VW3A1104R●●●	–	65/UL Type 12	VW3A1112	–
Tightening tool for remote mounting kit	–	–	ZB5AZ905	0.016/ *0.035*
Remote-mounting cordset equipped with 2 RJ45 connectors	1/ *3.28*	–	VW3A1104R10	0.050/ *0.110*
	3/ *9.84*	–	VW3A1104R30	0.150/ *0.331*
	5/ *16.40*	–	VW3A1104R50	0.250/ *0.551*
	10/ *32.81*	–	VW3A1104R100	0.500/ *1.102*
USB/Mini B USB cable for connecting the display terminal to a PC	–	–	TCSXCNAMUM3P	–
IP65 remote mounting kit for Ethernet port *(1)* Ø 22 RJ45 female/female adapter with seal	–	65	VW3A1115	0.018/ *0.040*
Set of 10 x IP55 shutters: To maintain IP55 protection when the graphic display terminal is removed *(2)*	–	55	VW3A1116	0.640/ *1.411*

Multidrop connection accessories

These accessories are used to connect a graphic display terminal to several drives via a multidrop link. This multidrop connection uses the RJ45 terminal port on the front of the drive.

Connection accessories

Description			Sold in lots of	Unit reference	Weight kg/ *lb*
Modbus splitter box 10 RJ45 connectors and 1 screw terminal block			–	LU9GC3	0.500/ *1.102*
Modbus T-junction boxes	With 0.3 m/*0.98 ft* *integrated cable*		–	VW3A8306TF03	0.190/ *0.419*
	With 1 m/3.28 ft *integrated cable*		–	VW3A8306TF10	0.210/ *0.463*
Modbus line terminator	For RJ45 connector	R = 120 Ω C = 1 nf	2	VW3A8306RC	0.010/ *0.022*

Cordsets (equipped with 2 RJ45 connectors)

Used for	Length m/ *ft*	Reference	Weight kg/ *lb*
Serial link	0.3/ *0.98*	VW3A8306R03	0.025/ *0.055*
	1/ *3.28*	VW3A8306R10	0.060/ *0.132*
	3/ *9.84*	VW3A8306R30	0.130/ *0.287*

(1) Used to connect a remote PC to the RJ45 port on an IP21 drive mounted in an enclosure or on a wall. Drill hole with a standard Ø 22 tool, as used for a pushbutton. (Requires a remote-mounting cordset VW3A1104R●0● equipped with 2 RJ45 connectors.)
(2) Only compatible with ATV650 drives.

Login screen

Customizable widgets

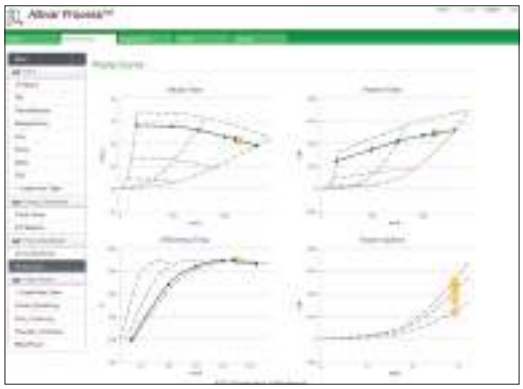

Pump curves

Energy dashboard

Web server

Presentation

- ■ The Web server can be accessed:
  - □ For a drive not connected to an Ethernet network:
    - Via an Ethernet cable or the Schneider Electric Wi-Fi dongle (the drive then appears as a network device)
  - □ For a drive connected to an Ethernet network:
    - From any point on the network by entering the drive IP address

- ■ The Web server is used for:
  - □ Commissioning the drive (setting configuration parameters and enabling the main functions)
  - □ Monitoring energy and process data, as well as drive and motor data
  - □ Diagnostics (drive status, file transfer, detected error and warning logs)

Description

The Web server is structured around 5 tabs.

- ■ “My dashboard” tab:
  - □ Configurable using a wide choice of widgets; groups all the information and dashboards selected by the user on one page

- ■ “Display” tab:
  - □ Monitors energy indicators, efficiency, and performance
  - □ Displays process data such as optimum pump operation
  - □ Monitors drive parameters and status
  - □ Shows the I/O state and assignment

- ■ “Diagnostics” tab:
  - □ Drive status
  - □ Time- and date-stamped detected error and warning logs
  - □ Network diagnostics
  - □ Access to drive self-tests

- ■ “Drive” tab:
  - □ Access to the main drive adjustment parameters with contextual help

- ■ “Setup” tab:
  - □ Network configuration
  - □ Access management
  - □ Transferring and retrieving drive configurations
  - □ Exporting data acquisition files and logs
  - □ Customizing pages (colors, logos, etc.)

Other characteristics:
- ■ Ease of connection via the RJ45 port or Wi-Fi connection
- ■ Password-protected authentication (modifiable password; access rights can be configured by administrator)
- ■ No downloads or installation necessary
- ■ Web server can be disabled
- ■ Works in a similar way on PCs, iPhones, iPads, Android systems, and the major Web browsers:
  - □ Internet Explorer® (version 8 or higher)
  - □ Google Chrome® (version 11 or higher)
  - □ Mozilla Firefox® (version 4 or higher)
  - □ Safari® (version 5.1.7 or higher)

DTM

Presentation

Using FDT/DTM technology it is possible to configure, control, and diagnose Altivar Process drives directly in EcoStruxure Control Expert and SoMove software by means of the same software brick (DTM).
FDT/DTM technology standardizes the communication interface between field devices and host systems. The DTM contains a uniform structure for managing drive access parameters.

Altivar Process DTM in EcoStruxure Control Expert

Specific functions of the Altivar Process DTM

- Offline or online access to drive data
- Transfer of configuration files to and from the drive
- Customization (dashboard, My Menu, etc.)
- Access to drive parameters and option cards
- Oscilloscope function
- Graphic interface to assist with configuration of the Altivar Process pump functions
- Energy and process dashboards
- Graphic display of system operation and comparison with optimum operation (pump curves)
- Detected error and warning logs (with time-stamping)

Advantages of the DTM library in EcoStruxure Control Expert:
- Single tool for configuration, setup, and diagnostics
- Network scan for automatic recognition of network configuration
- Ability to add/remove, copy/paste configuration files from other drives in the same architecture
- Single input point for all parameters shared between the ePAC (programmable controller) and the Altivar Process drive
- Creation of drive profiles for implicit communication with the ePAC as well as dedicated profiles for programs with DFBs (derived function blocks)
- Integration in the fieldbus topology
- Drive configuration is an integral part of the EcoStruxure Control Expert project file (STU) and the archive file (STA)

Advantages of the DTM library in SoMove:
- Drive-oriented software environment
- Wired connection to the Ethernet communication port
- Standard cable (file transfer performance)
- Function block library for EcoStruxure Control Expert
- Display blocks for Vijeo Citect

- Third-party software and downloads:
  - The Altivar Process DTM library is a flexible, open, and interactive tool that can be used in a third-party FDT.
  - DTMs can be downloaded from our website.

SoMove software

SoMove software

Presentation

SoMove software for PC is used to configure, set up, and maintain Altivar Process drives.

In addition to the functions offered by the Web server, SoMove software features the oscilloscope function for accurate display of data samples, as well as access to multi-drive applications.

The software can be connected to Altivar Process variable speed drives via:
- Ethernet Modbus and Wi-Fi connection with the Wi-Fi dongle TCSEGWB131W
- Ethernet Modbus TCP connection

For more information on SoMove setup software, please consult the SoMove Setup software for motor control devices catalog.

Variable speed drives

Altivar Process ATV600

Options for ATV630●●●M3, ATV630●●●N4, ATV630●●●N4Z, and ATV630●●●Y6 drives

Table showing possible combinations of options for ATV630●●●M3, ATV630●●●N4, ATV630●●●N4Z, and ATV630●●●Y6 drives

Motor		Drive	Wear parts			Options											
			Fan kit	UL Type 1 (IP2X) conformity kit	Flange-mounting kit	Passive filters (50 Hz)		Passive filters (60 Hz)		Line chokes	EMC filters		dv/dt filters		Sinus filter		Common mode filter *(1)*
kW	*HP*					THDi < 10%	THDi < 5%	THDi < 10%	THDi < 5%	THDi < 48%	Filter	IP21 kit	Filter	IP20 and IP21kit	Filter	IP21 kit	
Three-phase supply voltage: 200…240 V 50/60 Hz - IP21/UL Type 1																	
0.75	*1*	**ATV630U07M3**	VX5VPS1001	–	NSYPTDS1	–	–	–	–	–	VW3A4701	VW3A47901	VW3A5301	VW3A53902	VW3A5401	VW3A53901	VW3A5502
1.5	*2*	**ATV630U15M3**	VX5VPS1001	–	NSYPTDS1	–	–	–	–	–	VW3A4701	VW3A47901	VW3A5302	VW3A53902	VW3A5402	VW3A53901	VW3A5502
2.2	*3*	**ATV630U22M3**	VX5VPS1001	–	NSYPTDS1	–	–	–	–	–	VW3A4702	VW3A47902	VW3A5302	VW3A53902	VW3A5402	VW3A53901	VW3A5502
3	–	**ATV630U30M3**	VX5VPS1001	–	NSYPTDS1	–	–	–	–	–	VW3A4702	VW3A47902	VW3A5302	VW3A53902	VW3A5402	VW3A53901	VW3A5502
4	*5*	**ATV630U40M3**	VX5VPS1001	–	NSYPTDS1	–	–	–	–	–	VW3A4703	VW3A47903	VW3A5303	VW3A53902	VW3A5403	VW3A53902	VW3A5502
5.5	*7.5*	**ATV630U55M3**	VX5VPS2001	–	NSYPTDS2	–	–	–	–	–	VW3A4703	VW3A47903	VW3A5304	VW3A53903	VW3A5404	VW3A53903	VW3A5502
7.5	*10*	**ATV630U75M3**	VX5VPS3001	–	NSYPTDS3	–	–	–	–	–	VW3A4703	VW3A47903	VW3A5304	VW3A53903	VW3A5404	VW3A53903	VW3A5504
11	*15*	**ATV630D11M3**	VX5VPS3001	–	NSYPTDS3	–	–	–	–	–	VW3A4704	VW3A47904	VW3A5304	VW3A53903	VW3A5404	VW3A53903	VW3A5504
15	*20*	**ATV630D15M3**	VX5VPS4001	–	NSYPTDS4	–	–	–	–	–	VW3A4705	VW3A47905	VW3A5305	VW3A53905	VW3A5405	VW3A53904	VW3A5504
18.5	*25*	**ATV630D18M3**	VX5VPS4001	–	NSYPTDS4	–	–	–	–	–	VW3A4706	VW3A47906	VW3A5305	VW3A53905	VW3A5405	VW3A53904	VW3A5504
22	*30*	**ATV630D22M3**	VX5VPS4001	–	NSYPTDS4	–	–	–	–	–	VW3A4706	VW3A47906	VW3A5305	VW3A53905	VW3A5405	VW3A53904	VW3A5504
30	*40*	**ATV630D30M3**	VX5VPS5001	–	NSYPTDS5	–	–	–	–	–	VW3A4707	VW3A47907	VW3A5306	–	VW3A5406	–	VW3A5504
37	*50*	**ATV630D37M3**	VX5VPS5001	–	NSYPTDS5	–	–	–	–	–	VW3A4707	VW3A47907	VW3A5306	–	VW3A5406	–	VW3A5504
45	*60*	**ATV630D45M3**	VX5VPS5001	–	NSYPTDS5	–	–	–	–	–	VW3A4708	VW3A47908	VW3A5306	–	VW3A5406	–	VW3A5504
55	*75*	**ATV630D55M3**	VX5VPS6001	VW3A9704	VW3A95116	–	–	–	–	–	VW3A4709	–	VW3A5307	–	–	–	VW3A5506
75	*100*	**ATV630D75M3**	VX5VPS6001	VW3A9704	VW3A95116	–	–	–	–	–	VW3A4710	–	VW3A5307	–	VW3A5407 *(2)*	–	VW3A5506
Three-phase supply voltage: 380...480 V 50/60 Hz - IP21/UL Type 1																	
0.75	*1*	**ATV630U07N4**	VX5VPS1001	–	NSYPTDS1	VW3A46101	VW3A46120	VW3A46139	VW3A46158	–	VW3A4701	VW3A47901	VW3A5301	VW3A53902	VW3A5401	VW3A53901	VW3A5502
1.5	*2*	**ATV630U15N4**	VX5VPS1001	–	NSYPTDS1	VW3A46101	VW3A46120	VW3A46139	VW3A46158	–	VW3A4701	VW3A47901	VW3A5301	VW3A53902	VW3A5401	VW3A53901	VW3A5502
2.2	*3*	**ATV630U22N4**	VX5VPS1001	–	NSYPTDS1	VW3A46101	VW3A46120	VW3A46139	VW3A46158	–	VW3A4701	VW3A47901	VW3A5301	VW3A53902	VW3A5401	VW3A53901	VW3A5502
3	–	**ATV630U30N4**	VX5VPS1001	–	NSYPTDS1	VW3A46101	VW3A46120	VW3A46139	VW3A46158	–	VW3A4702	VW3A47902	VW3A5302	VW3A53902	VW3A5402	VW3A53901	VW3A5502
4	*5*	**ATV630U40N4**	VX5VPS1001	–	NSYPTDS1	VW3A46102	VW3A46121	VW3A46140	VW3A46159	–	VW3A4702	VW3A47902	VW3A5302	VW3A53902	VW3A5402	VW3A53901	VW3A5502
5.5	*7.5*	**ATV630U55N4**	VX5VPS1001	–	NSYPTDS1	VW3A46102	VW3A46121	VW3A46140	VW3A46159	–	VW3A4702	VW3A47902	VW3A5302	VW3A53902	VW3A5402	VW3A53901	VW3A5502
7.5	*10*	**ATV630U75N4**	VX5VPS2001	–	NSYPTDS2	VW3A46103	VW3A46122	VW3A46141	VW3A46160	–	VW3A4703	VW3A47903	VW3A5303	VW3A53902	VW3A5403	VW3A53902	VW3A5502
11	*15*	**ATV630D11N4**	VX5VPS2001	–	NSYPTDS2	VW3A46104	VW3A46123	VW3A46142	VW3A46161	–	VW3A4703	VW3A47903	VW3A5303	VW3A53902	VW3A5403	VW3A53902	VW3A5502
15	*20*	**ATV630D15N4**	VX5VPS3001	–	NSYPTDS3	VW3A46105	VW3A46124	VW3A46143	VW3A46162	–	VW3A4703	VW3A47903	VW3A5304	VW3A53903	VW3A5404	VW3A53903	VW3A5504
18.5	*25*	**ATV630D18N4**	VX5VPS3001	–	NSYPTDS3	VW3A46106	VW3A46125	VW3A46144	VW3A46163	–	VW3A4704	VW3A47904	VW3A5304	VW3A53903	VW3A5404	VW3A53903	VW3A5504
22	*30*	**ATV630D22N4**	VX5VPS3001	–	NSYPTDS3	VW3A46107	VW3A46126	VW3A46145	VW3A46164	–	VW3A4704	VW3A47904	VW3A5304	VW3A53903	VW3A5404	VW3A53903	VW3A5504
30	*40*	**ATV630D30N4**	VX5VPS4001	–	NSYPTDS4	VW3A46108	VW3A46127	VW3A46146	VW3A46165	–	VW3A4705	VW3A47905	VW3A5305	VW3A53905	VW3A5405	VW3A53904	VW3A5504
37	*50*	**ATV630D37N4**	VX5VPS4001	–	NSYPTDS4	VW3A46109	VW3A46128	VW3A46147	VW3A46166	–	VW3A4706	VW3A47906	VW3A5305	VW3A53905	VW3A5405	VW3A53904	VW3A5504
45	*60*	**ATV630D45N4**	VX5VPS4001	–	NSYPTDS4	VW3A46110	VW3A46129	VW3A46148	VW3A46167	–	VW3A4706	VW3A47906	VW3A5305	VW3A53905	VW3A5405	VW3A53904	VW3A5504
55	*75*	**ATV630D55N4**	VX5VPS5001	–	NSYPTDS5	VW3A46111	VW3A46130	VW3A46149	VW3A46168	–	VW3A4707	VW3A47907	VW3A5306	–	VW3A5406	–	VW3A5504
75	*100*	**ATV630D75N4**	VX5VPS5001	–	NSYPTDS5	VW3A46112	VW3A46131	VW3A46150	VW3A46169	–	VW3A4708	VW3A47908	VW3A5306	–	VW3A5406	–	VW3A5504
90	*125*	**ATV630D90N4**	VX5VPS5001	–	NSYPTDS5	VW3A46113	VW3A46132	VW3A46151	VW3A46170	–	VW3A4708	VW3A47908	VW3A5306	–	VW3A5406	–	VW3A5504
110	*150*	**ATV630C11N4**	VX5VPS6001	VW3A9704	VW3A95116	VW3A46114	VW3A46133	VW3A46152	VW3A46171	–	VW3A4709	–	VW3A5307	–	–	–	VW3A5506
132	*200*	**ATV630C13N4**	VX5VPS6001	VW3A9704	VW3A95116	VW3A46115	VW3A46134	VW3A46153	VW3A46172	–	VW3A4709	–	VW3A5307	–	VW3A5407 *(2)*	–	VW3A5506
160	*250*	**ATV630C16N4**	VX5VPS6001	VW3A9704	VW3A95116	VW3A46116	VW3A46135	VW3A46154	VW3A46173	–	VW3A4710	–	VW3A5307	–	VW3A5407 *(2)*	–	VW3A5506
220	*350*	**ATV630C22N4**	VZ3V1212 *(3)*	VW3A9212	VW3A9513	VW3A46118	VW3A46137	VW3A46155	VW3A46174	–	VW3A4411	VW3A9601	VW3A5106	–	VW3A5209 *(2)*	–	–
250	*400*	**ATV630C25N4**	VZ3V1212 *(3)*	VW3A9213	VW3A9514	VW3A46119	VW3A46138	VW3A46157	VW3A46176	–	VW3A4411	VW3A9601	VW3A5107	–	VW3A5210 *(2)*	–	–
315	*500*	**ATV630C31N4**	VZ3V1212 *(3)*	VW3A9213	VW3A9514	VW3A46116 x 2	VW3A46135 x 2	VW3A46153 x 2	VW3A46172 x 2	–	VW3A4411	VW3A9601	VW3A5107	–	VW3A5210 *(2)*	–	–
Three-phase supply voltage: 500…690 V 50/60 Hz - IP00																	
2.2	*3*	**ATV630U22Y6**	VX5VPS3002	VW3A9705	–	–	–	–	–	VW3A4551	*(4)*	–	VW3A5103 / VW3A5104	–	VW3A5215	–	–
3	–	**ATV630U30Y6**	VX5VPS3002	VW3A9705	–	–	–	–	–	VW3A4551	*(4)*	–	VW3A5103 / VW3A5104	–	VW3A5215	–	–
4	*5*	**ATV630U40Y6**	VX5VPS3002	VW3A9705	–	–	–	–	–	VW3A4551	*(4)*	–	VW3A5103 / VW3A5104	–	VW3A5215	–	–
5.5	*7.5*	**ATV630U55Y6**	VX5VPS3002	VW3A9705	–	–	–	–	–	VW3A4552	*(4)*	–	VW3A5103 / VW3A5104	–	VW3A5215	–	–
7.5	*10*	**ATV630U75Y6**	VX5VPS3002	VW3A9705	–	–	–	–	–	VW3A4552	*(4)*	–	VW3A5103 / VW3A5104	–	VW3A5215	–	–
11	*15*	**ATV630D11Y6**	VX5VPS3002	VW3A9705	–	–	–	–	–	VW3A4553	*(4)*	–	VW3A5103 / VW3A5104	–	VW3A5216	–	–
15	*20*	**ATV630D15Y6**	VX5VPS3002	VW3A9705	–	–	–	–	–	VW3A4553	*(4)*	–	VW3A5104	–	VW3A5216	–	–
18.5	*25*	**ATV630D18Y6**	VX5VPS3002	VW3A9705	–	–	–	–	–	VW3A4554	*(4)*	–	VW3A5104	–	VW3A5216	–	–
22.0	*30*	**ATV630D22Y6**	VX5VPS3002	VW3A9705	–	–	–	–	–	VW3A4554	*(4)*	–	VW3A5104	–	VW3A5216	–	–
30.0	*40*	**ATV630D30Y6**	VX5VPS3002	VW3A9705	–	–	–	–	–	VW3A4555	*(4)*	–	VW3A5104	–	VW3A5217	–	–
37.0	*50*	**ATV630D37Y6**	VX5VPS5002	VW3A9706	–	–	–	–	–	VW3A4555	*(4)*	–	VW3A5104	–	VW3A5217	–	–
45.0	*60*	**ATV630D45Y6**	VX5VPS5002	VW3A9706	–	–	–	–	–	VW3A4555	*(4)*	–	VW3A5104	–	VW3A5218	–	–
55.0	*75*	**ATV630D55Y6**	VX5VPS5002	VW3A9706	–	–	–	–	–	VW3A4556	*(4)*	–	VW3A5104	–	VW3A5218	–	–
75.0	*100*	**ATV630D75Y6**	VX5VPS5002	VW3A9706	–	–	–	–	–	VW3A4556	*(4)*	–	VW3A5104	–	VW3A5219	–	–
90.0	*125*	**ATV630D90Y6**	VX5VPS5002	VW3A9706	–	–	–	–	–	VW3A4556	*(4)*	–	VW3A5104	–	VW3A5219	–	–
Pages			2/2	2/12	2/13	2/13	2/34	2/35	2/36	2/37	2/41	2/38	2/40	2/42	2/44	2/45	2/46	2/47

(1) This combination table is given for a maximum length of 300 m/984 ft of unshielded cable. For other cable lengths, or for shielded cables, see page 2/47.
(2) In "Normal Duty", apply a derating of 1 to the drive nominal power with a minimum switching frequency of 4 kHz. For example, an ATV630D75M3 drive with sinus filter can be used on a 55 kW motor.
*(3) Electronic power fan for drive, with 1 unit for **ATV630C22N4**, 2 units for **ATV630C25N4**, and 3 units for **ATV630C31N4**.*
(4) Please consult our Customer Care Teams.

Variable speed drives

Altivar Process ATV600

Options for ATV650●●●N4 and ATV650●●●N4E drives

Table showing possible combinations of options for ATV650●●●N4 and ATV650●●●N4E drives

Motor		Drive	Wear parts			Options										
			Fan kit	UL Type 1 conformity kit	Flange-mounting kit	Passive filters (50 Hz)		Passive filters (60 Hz)		EMC filters		dv/dt filters		Sinus filter		Common mode filter (1)
kW	HP					THDi < 10%	THDi < 5%	THDi < 10%	THDi < 5%	Filter	IP21 kit	Filter	IP20 and IP21kit	Filter	IP21 kit	
Three-phase supply voltage: 380...480 V 50/60 Hz - IP55																
0.75	1	**ATV650U07N4**	VX5VPS1001	–	–	VW3A46101 (2)	VW3A46120 (2)	VW3A46139 (2)	VW3A46158 (2)	VW3A4701	–	VW3A5301	–	VW3A5401 (2)	–	VW3A5502
1.5	2	**ATV650U15N4**	VX5VPS1001	–	–	VW3A46101 (2)	VW3A46120 (2)	VW3A46139 (2)	VW3A46158 (2)	VW3A4701	–	VW3A5301	–	VW3A5401 (2)	–	VW3A5502
2.2	3	**ATV650U22N4**	VX5VPS1001	–	–	VW3A46101 (2)	VW3A46120 (2)	VW3A46139 (2)	VW3A46158 (2)	VW3A4701	–	VW3A5301	–	VW3A5401 (2)	–	VW3A5502
3	–	**ATV650U30N4**	VX5VPS1001	–	–	VW3A46101 (2)	VW3A46120 (2)	VW3A46139 (2)	VW3A46158 (2)	VW3A4702	–	VW3A5302	–	VW3A5402 (2)	–	VW3A5502
4	5	**ATV650U40N4**	VX5VPS1001	–	–	VW3A46102 (2)	VW3A46121 (2)	VW3A46140 (2)	VW3A46159 (2)	VW3A4702	–	VW3A5302	–	VW3A5402 (2)	–	VW3A5502
5.5	7.5	**ATV650U55N4**	VX5VPS1001	–	–	VW3A46102 (2)	VW3A46121 (2)	VW3A46140 (2)	VW3A46159 (2)	VW3A4702	–	VW3A5302	–	VW3A5402 (2)	–	VW3A5502
7.5	10	**ATV650U75N4**	VX5VPS2001	–	–	VW3A46103 (2)	VW3A46122 (2)	VW3A46141 (2)	VW3A46160 (2)	VW3A4703	–	VW3A5303	–	VW3A5403 (2)	–	VW3A5502
11	15	**ATV650D11N4**	VX5VPS2001	–	–	VW3A46104 (2)	VW3A46123 (2)	VW3A46142 (2)	VW3A46161 (2)	VW3A4703	–	VW3A5303	–	VW3A5403 (2)	–	VW3A5502
15	20	**ATV650D15N4**	VX5VPS3001	–	–	VW3A46105 (2)	VW3A46124 (2)	VW3A46143 (2)	VW3A46162 (2)	VW3A4703	–	VW3A5304	–	VW3A5404 (2)	–	VW3A5504
18.5	25	**ATV650D18N4**	VX5VPS3001	–	–	VW3A46106 (2)	VW3A46125 (2)	VW3A46144 (2)	VW3A46163 (2)	VW3A4704	–	VW3A5304	–	VW3A5404 (2)	–	VW3A5504
22	30	**ATV650D22N4**	VX5VPS3001	–	–	VW3A46107 (2)	VW3A46126 (2)	VW3A46145 (2)	VW3A46164 (2)	VW3A4704	–	VW3A5304	–	VW3A5404 (2)	–	VW3A5504
30	40	**ATV650D30N4**	VX5VPS4001	–	–	VW3A46108 (2)	VW3A46127 (2)	VW3A46146 (2)	VW3A46165 (2)	VW3A4705	–	VW3A5305	–	VW3A5405 (2)	–	VW3A5504
37	50	**ATV650D37N4**	VX5VPS4001	–	–	VW3A46109 (2)	VW3A46128 (2)	VW3A46147 (2)	VW3A46166 (2)	VW3A4706	–	VW3A5305	–	VW3A5405 (2)	–	VW3A5504
45	60	**ATV650D45N4**	VX5VPS4001	–	–	VW3A46110 (2)	VW3A46129 (2)	VW3A46148 (2)	VW3A46167 (2)	VW3A4706	–	VW3A5305	–	VW3A5405 (2)	–	VW3A5504
55	75	**ATV650D55N4**	VX5VPS5001	–	–	VW3A46111 (2)	VW3A46130 (2)	VW3A46149 (2)	VW3A46168 (2)	VW3A4707	–	VW3A5306	–	VW3A5406 (2)	–	VW3A5504
75	100	**ATV650D75N4**	VX5VPS5001	–	–	VW3A46112 (2)	VW3A46131 (2)	VW3A46150 (2)	VW3A46169 (2)	VW3A4708	–	VW3A5306	–	VW3A5406 (2)	–	VW3A5504
90	125	**ATV650D90N4**	VX5VPS5001	–	–	VW3A46113 (2)	VW3A46132 (2)	VW3A46151 (2)	VW3A46170 (2)	VW3A4708	–	VW3A5306	–	VW3A5406 (2)	–	VW3A5504
Three-phase supply voltage: 380...480 V 50/60 Hz - IP55 with Vario disconnect switch																
0.75	1	**ATV650U07N4E**	VX5VPS1001	–	–	VW3A46101 (2)	VW3A46120 (2)	VW3A46139 (2)	VW3A46158 (2)	VW3A4701	–	VW3A5301	–	VW3A5401 (2)	–	VW3A5502
1.5	2	**ATV650U15N4E**	VX5VPS1001	–	–	VW3A46101 (2)	VW3A46120 (2)	VW3A46139 (2)	VW3A46158 (2)	VW3A4701	–	VW3A5301	–	VW3A5401 (2)	–	VW3A5502
2.2	3	**ATV650U22N4E**	VX5VPS1001	–	–	VW3A46101 (2)	VW3A46120 (2)	VW3A46139 (2)	VW3A46158 (2)	VW3A4701	–	VW3A5301	–	VW3A5401 (2)	–	VW3A5502
3	–	**ATV650U30N4E**	VX5VPS1001	–	–	VW3A46101 (2)	VW3A46120 (2)	VW3A46139 (2)	VW3A46158 (2)	VW3A4702	–	VW3A5302	–	VW3A5402 (2)	–	VW3A5502
4	5	**ATV650U40N4E**	VX5VPS1001	–	–	VW3A46102 (2)	VW3A46121 (2)	VW3A46140 (2)	VW3A46159 (2)	VW3A4702	–	VW3A5302	–	VW3A5402 (2)	–	VW3A5502
5.5	7.5	**ATV650U55N4E**	VX5VPS1001	–	–	VW3A46102 (2)	VW3A46121 (2)	VW3A46140 (2)	VW3A46159 (2)	VW3A4702	–	VW3A5302	–	VW3A5402 (2)	–	VW3A5502
7.5	10	**ATV650U75N4E**	VX5VPS2001	–	–	VW3A46103 (2)	VW3A46122 (2)	VW3A46141 (2)	VW3A46160 (2)	VW3A4703	–	VW3A5303	–	VW3A5403 (2)	–	VW3A5502
11	15	**ATV650D11N4E**	VX5VPS2001	–	–	VW3A46104 (2)	VW3A46123 (2)	VW3A46142 (2)	VW3A46161 (2)	VW3A4703	–	VW3A5303	–	VW3A5403 (2)	–	VW3A5502
15	20	**ATV650D15N4E**	VX5VPS3001	–	–	VW3A46105 (2)	VW3A46124 (2)	VW3A46143 (2)	VW3A46162 (2)	VW3A4703	–	VW3A5304	–	VW3A5404 (2)	–	VW3A5504
18.5	25	**ATV650D18N4E**	VX5VPS3001	–	–	VW3A46106 (2)	VW3A46125 (2)	VW3A46144 (2)	VW3A46163 (2)	VW3A4704	–	VW3A5304	–	VW3A5404 (2)	–	VW3A5504
22	30	**ATV650D22N4E**	VX5VPS3001	–	–	VW3A46107 (2)	VW3A46126 (2)	VW3A46145 (2)	VW3A46164 (2)	VW3A4704	–	VW3A5304	–	VW3A5404 (2)	–	VW3A5504
30	40	**ATV650D30N4E**	VX5VPS4001	–	–	VW3A46108 (2)	VW3A46127 (2)	VW3A46146 (2)	VW3A46165 (2)	VW3A4705	–	VW3A5305	–	VW3A5405 (2)	–	VW3A5504
37	50	**ATV650D37N4E**	VX5VPS4001	–	–	VW3A46109 (2)	VW3A46128 (2)	VW3A46147 (2)	VW3A46166 (2)	VW3A4706	–	VW3A5305	–	VW3A5405 (2)	–	VW3A5504
45	60	**ATV650D45N4E**	VX5VPS4001	–	–	VW3A46110 (2)	VW3A46129 (2)	VW3A46148 (2)	VW3A46167 (2)	VW3A4706	–	VW3A5305	–	VW3A5405 (2)	–	VW3A5504
55	75	**ATV650D55N4E**	VX5VPS5001	–	–	VW3A46111 (2)	VW3A46130 (2)	VW3A46149 (2)	VW3A46168 (2)	VW3A4707	–	VW3A5306	–	VW3A5406 (2)	–	VW3A5504
75	100	**ATV650D75N4E**	VX5VPS5001	–	–	VW3A46112 (2)	VW3A46131 (2)	VW3A46150 (2)	VW3A46169 (2)	VW3A4708	–	VW3A5306	–	VW3A5406 (2)	–	VW3A5504
90	125	**ATV650D90N4E**	VX5VPS5001	–	–	VW3A46113 (2)	VW3A46132 (2)	VW3A46151 (2)	VW3A46170 (2)	VW3A4708	–	VW3A5306	–	VW3A5406 (2)	–	VW3A5504
Three-phase supply voltage: 380…480 V 50/60 Hz - IP20																
0.75	1	**ATV630U07N4Z**	VX5VPS1001	–	NSYPTDS1	VW3A46101	VW3A46120	VW3A46139	VW3A46158	VW3A4701	VW3A47901	VW3A5301	VW3A53902	VW3A5401	VW3A53901	VW3A5502
1.5	2	**ATV630U15N4Z**	VX5VPS1001	–	NSYPTDS1	VW3A46101	VW3A46120	VW3A46139	VW3A46158	VW3A4701	VW3A47901	VW3A5301	VW3A53902	VW3A5401	VW3A53901	VW3A5502
2.2	3	**ATV630U22N4Z**	VX5VPS1001	–	NSYPTDS1	VW3A46101	VW3A46120	VW3A46139	VW3A46158	VW3A4701	VW3A47901	VW3A5301	VW3A53902	VW3A5401	VW3A53901	VW3A5502
3	–	**ATV630U30N4Z**	VX5VPS1001	–	NSYPTDS1	VW3A46101	VW3A46120	VW3A46139	VW3A46158	VW3A4702	VW3A47902	VW3A5302	VW3A53902	VW3A5402	VW3A53901	VW3A5502
4	5	**ATV630U40N4Z**	VX5VPS1001	–	NSYPTDS1	VW3A46102	VW3A46121	VW3A46140	VW3A46159	VW3A4702	VW3A47902	VW3A5302	VW3A53902	VW3A5402	VW3A53901	VW3A5502
5.5	7.5	**ATV630U55N4Z**	VX5VPS1001	–	NSYPTDS1	VW3A46102	VW3A46121	VW3A46140	VW3A46159	VW3A4702	VW3A47902	VW3A5302	VW3A53902	VW3A5402	VW3A53901	VW3A5502
7.5	10	**ATV630U75N4Z**	VX5VPS2001	–	NSYPTDS2	VW3A46103	VW3A46122	VW3A46141	VW3A46160	VW3A4703	VW3A47903	VW3A5303	VW3A53902	VW3A5403	VW3A53902	VW3A5502
11	15	**ATV630D11N4Z**	VX5VPS2001	–	NSYPTDS2	VW3A46104	VW3A46123	VW3A46142	VW3A46161	VW3A4703	VW3A47903	VW3A5303	VW3A53902	VW3A5403	VW3A53902	VW3A5502
15	20	**ATV630D15N4Z**	VX5VPS3001	–	NSYPTDS3	VW3A46105	VW3A46124	VW3A46143	VW3A46162	VW3A4703	VW3A47903	VW3A5304	VW3A53903	VW3A5404	VW3A53903	VW3A5504
18.5	25	**ATV630D18N4Z**	VX5VPS3001	–	NSYPTDS3	VW3A46106	VW3A46125	VW3A46144	VW3A46163	VW3A4704	VW3A47904	VW3A5304	VW3A53903	VW3A5404	VW3A53903	VW3A5504
22	30	**ATV630D22N4Z**	VX5VPS3001	–	NSYPTDS3	VW3A46107	VW3A46126	VW3A46145	VW3A46164	VW3A4704	VW3A47904	VW3A5304	VW3A53903	VW3A5404	VW3A53903	VW3A5504
Three-phase supply voltage: 380…480 V 50/60 Hz - IP00																
30	40	**ATV630D30N4Z**	VX5VPS4001	–	NSYPTDS4	VW3A46108	VW3A46127	VW3A46146	VW3A46165	VW3A4705	VW3A47905	VW3A5305	VW3A53905	VW3A5405	VW3A53904	VW3A5504
37	50	**ATV630D37N4Z**	VX5VPS4001	–	NSYPTDS4	VW3A46109	VW3A46128	VW3A46147	VW3A46166	VW3A4706	VW3A47906	VW3A5305	VW3A53905	VW3A5405	VW3A53904	VW3A5504
45	60	**ATV630D45N4Z**	VX5VPS1001	–	NSYPTDS4	VW3A46110	VW3A46129	VW3A46148	VW3A46167	VW3A4706	VW3A47906	VW3A5305	VW3A53905	VW3A5405	VW3A53904	VW3A5504
55	75	**ATV630D55N4Z**	VX5VPS5001	–	NSYPTDS5	VW3A46111	VW3A46130	VW3A46149	VW3A46168	VW3A4707	VW3A47907	VW3A5306	–	VW3A5406	–	VW3A5504
75	100	**ATV630D75N4Z**	VX5VPS5001	–	NSYPTDS5	VW3A46112	VW3A46131	VW3A46150	VW3A46169	VW3A4708	VW3A47908	VW3A5306	–	VW3A5406	–	VW3A5504
90	125	**ATV630D90N4Z**	VX5VPS5001	–	NSYPTDS5	VW3A46113	VW3A46132	VW3A46151	VW3A46170	VW3A4708	VW3A47908	VW3A5306	–	VW3A5406	–	VW3A5504
Pages			2/2	2/12	2/13	2/13	2/34	2/35	2/36	2/37	2/38	2/40	2/42	2/44	2/45	2/46	2/47

(1) This combination table is given for a maximum length of 300 m/984 ft of unshielded cable. For other cable lengths, or for shielded cables, see page 2/47.
(2) When used with ATV650U07N4/N4E...D90N4/N4E drives, the filter must be mounted in a separate enclosure to maintain IP55 protection for the installation.

Variable speed drives

Altivar Process ATV600

Module compatibility table

Module compatibility table			
Additional I/O modules			
Description	**Reference**	**Slot**	**Page**
Extended I/O module *(1)*	VW3A3203	A or B	2/24
Extended relay module *(1)*	VW3A3204	A or B	2/24
Communication modules			
Description	**Reference**	**Slot**	**Page**
EtherNet/IP and Modbus TCP dual port	VW3A3720	A	2/28
EtherNet/IP, Modbus TCP, and MD-Link dual port	VW3A3721	A	2/28
CANopen daisy chain	VW3A3608	A	2/29
CANopen SUB-D	VW3A3618	A	2/29
CANopen screw terminal block	VW3A3628	A	2/30
PROFINET	VW3A3627	A	2/31
PROFIBUS DP V1	VW3A3607	A	2/31
POWERLINK Network	VW3A3619	A	2/31
DeviceNet	VW3A3609	A	2/32
BACnet MS/TP	VW3A3725	A	2/32

(1) These references can only be used once per drive, e.g. VW3A3203 in slot A and VW3A3204 in slot B.

PF140354

Altivar Process drives slots

Variable speed drives
Altivar Process ATV600
Option: Additional I/O modules

PF140354

Altivar Process drives slots for additional I/O modules

Additional I/O modules

Presentation

By installing additional I/O modules, Altivar Process drives can be adapted to meet the needs of applications that manage additional sensors or specific sensors.

Two additional I/O modules are available:
- Extended I/O module
- Extended relay module

These modules are inserted in slots A and B on Altivar Process drives:
1 Slot A for additional I/O or communication modules
2 Slot B for additional I/O modules

Extended I/O module

- 2 differential analog inputs configurable via software as current (0-20 mA/4-20 mA), or for PTC, PT100, or PT1000, 2- or 3-wire probe
- 14-bit resolution
- 6 x 24 V ⎓ positive or negative digital inputs
- Sampling: 1 ms max
- 2 assignable digital outputs
- 2 removable spring terminal blocks

Extended relay module

- 3 relay outputs with NO contacts
- 1 fixed screw terminal block

Note: *Extended I/O module and extended relay module can go in either slot A or slot B on Altivar Process drives. However, the drives cannot take 2 modules of the same type (e.g. 2 extended I/O modules or 2 extended relay modules).*

2

Variable speed drives

Altivar Process ATV600

Option: Additional I/O modules

PF140391

VW3A3203

PF150897

VW3A3204

Additional I/O modules

Description	I/O type				Reference	Weight kg/ *lb*
	Digital inputs	Digital outputs	Analog inputs	Relay outputs		
Extended I/O module	6	2	2 *(1)*	–	VW3A3203	0.500/ *1.102*
Extended relay module	–	–	–	3 *(2)*	VW3A3204	0.400/ *0.882*

(1) Differential analog inputs configurable via software as current (0-20 mA/4-20 mA), or for PTC, PT100, or PT1000, 2- or 3-wire probe. When configured as PTC probe inputs, they must never be used to monitor the temperature of an ATEX motor for applications in explosive atmospheres. To make an installation compliant with ATEX recommendations, please refer to the Installation Manual for each product.

(2) NO contacts.

Variable speed drives
Altivar Process ATV600
Communication buses and networks

Presentation

Altivar Process drives have 3 built-in RJ45 communication ports as standard:
- 1 Ethernet Modbus TCP port
- 2 serial ports

Integrated communication protocols

Altivar Process drives integrate the Modbus TCP and Modbus serial link communication protocols as standard.

- Ethernet port

This offers standard services regularly used in industrial networks:
- Modbus TCP message handling is based on the Modbus protocol and is used to exchange process data with other network devices (e.g. a controller). It provides Altivar Process drives with access to the Modbus protocol and to the high performance of the Ethernet network, which is the communication standard for numerous devices.
- SNMP (Simple Network Management Protocol) offers standard diagnostics services for network management tools.
- The FDR (Fast Device Replacement) service allows automatic reconfiguration of a new device installed to replace an existing device.
- Device integrity is reinforced by disabling some unused services as well as managing a list of authorized devices.
- Setup and adjustment tools (SoMove, EcoStruxure Control Expert with DTM) can be connected locally or remotely.
- The embedded Web server is used to display operating data and dashboards as well as to configure and perform system elements diagnostics from any Web browser.

These numerous services offered by Altivar Process drives simplify integration into Schneider Electric process automation control systems like M580 ePAC or Foxboro Evo DCS.

- Serial ports
- One port dedicated to field network operation for exchanging data with other devices via the Modbus protocol
- A second dedicated port for the multidrop connection of the following HMIs and configuration tools:
  - The remote graphic display terminal supplied with the drive
  - A Magelis industrial HMI terminal
  - A PC with SoMove or EcoStruxure Control Expert setup software

The detailed specifications for the Ethernet or serial communication ports, and the Modbus and Modbus TCP protocols are available on our website.

PF140354

Altivar process drives ports and slots

Description

1 RJ45 Ethernet Modbus TCP port
2 RJ45 serial port
3 Slot A for additional I/O or communication (fieldbus) modules
4 Slot B for additional I/O modules
5 Removable screw terminal blocks for 24 V ⎓ power supply and integrated I/O
6 RJ45 serial link for HMI (remote graphic display terminal, Magelis terminal, etc.)

Altivar Process drives can only take one communication module, in slot A **3** only. They cannot take 2 modules of the same type (e.g. 2 extended I/O modules or 2 extended relay modules).
The drives can take 1 extended I/O module and 1 extended relay module in either slot A **3** or slot B **4**.

Note: *The User Manuals and description files (gsd, eds, xif) for the devices on the communication buses and networks are available on our website.*

Optional communication modules

The Altivar Process drive can also be connected to other industrial communication buses and networks by using one of the communication modules available as an option. Communication cards are supplied in “cassette” format for ease of mounting/removal.

Dedicated communication modules:
- ■ EtherNet/IP and Modbus TCP dual port
- ■ CANopen:
  - □ RJ45 daisy chain
  - □ SUB-D
  - □ Screw terminal block
- ■ PROFINET
- ■ PROFIBUS DP V1
- ■ POWERLINK network
- ■ DeviceNet
- ■ BACnet

PROFINET and PROFIBUS DP V1 modules also support the Profidrive and CiA402 profiles.

It is possible to maintain communication using a separate power supply for the control and power sections. Monitoring and diagnostics are possible via the network even if there is no power supply to the power section.

Functions

The drive functions can be accessed via the various communication networks:
- ■ Configuration
- ■ Adjustment
- ■ Control
- ■ Monitoring

Altivar Process drives offer a high degree of interfacing flexibility with the possibility to assign, by configuration, the different control sources (I/O, communication networks, and HMI terminal) to control functions in order to meet the requirements of complex applications.

Network services and parameters are configured using the SoMove drive setup software, or using EcoStruxure Control Expert if the drive is being integrated into a PlantStruXure architecture.

Communication is monitored according to the specific criteria for each protocol. However, regardless of the protocol, it is possible to configure how the drive responds to a detected communication interruption, as follows:
- ■ Define the type of stop when a communication interruption is detected
- ■ Maintain last command received
- ■ Fallback position at preset speed
- ■ Ignore the detected communication interruption

Variable speed drives

Altivar Process ATV600

Communication buses and networks

Integrated ports

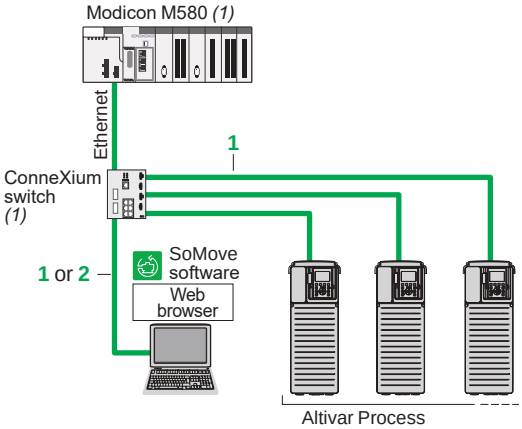

Example of Ethernet architecture

Integrated Ethernet port

Description	Item	Length m/ ft	Reference	Weight kg/ lb
ConneXium cordsets *(2)*				
Straight shielded twisted pair cables equipped with 2 RJ45 connectors conforming to EIA/TIA-568 category 5 and IEC 11801/EN 50173-1, class D	1	2/ *6.6*	490NTW00002	–
		5/ *16.4*	490NTW00005	–
		12/ *39*	490NTW00012	–
Crossover shielded twisted pair cables equipped with 2 RJ45 connectors conforming to EIA/TIA-568 category 5 and IEC 11801/EN 50173-1, class D	2	5/ *16.4*	490NTC00005	–
		15/ *49*	490NTC00015	–
Straight shielded twisted pair cables equipped with 2 RJ45 connectors conforming to UL and CSA 22.1	1	2/ *6.6*	490NTW00002U	–
		5/ *16.4*	490NTW00005U	–
		12/ *39*	490NTW00012U	–

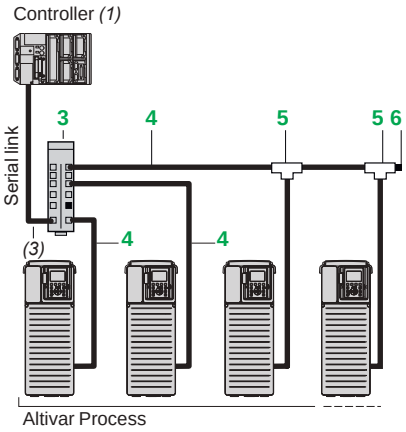

Example of serial link architecture

Integrated serial port

Description		Item	Length m/ ft	Reference	Weight kg/ lb
Connection accessories					
Splitter box 10 RJ45 connectors and 1 screw terminal block		3	–	LU9GC3	0.500/ *1.102*
Modbus T-junction boxes	With 0.3 m/*0.98 ft* integrated cable	5	0.3/ *0.98*	VW3A8306TF03	0.190/ *0.419*
	With 1 m/*3.28 ft* integrated cable	5	1/ *3.28*	VW3A8306TF10	0.210/ *0.463*
Modbus line terminator *(4)*	For RJ45 connector R = 120 Ω C = 1 nf	6	–	VW3A8306RC	0.010/ *0.022*
Cordsets equipped with 2 RJ45 connectors		4	0.3/ *0.98*	VW3A8306R03	0.025/ *0.055*
			1/ *3.28*	VW3A8306R10	0.060/ *0.132*
			3/ *9.84*	VW3A8306R30	0.130/ *0.287*

(1) Please refer to the Modicon automation platform catalogs.
(2) Also exist in 40 and 80 m/131 and 262 ft lengths. For other ConneXium connection accessories, please refer to the Modicon Ethernet Switch catalog.
(3) Cable depends on the controller.
(4) Sold in lots of 2.

Variable speed drives

Altivar Process ATV600

Communication buses and networks
Option: Communication modules

PF130914A

VW3A3720

EtherNet/IP and Modbus TCP networks *(1)*

Description	Item	Length m/ *ft*	Reference	Weight kg/ *lb*
Communication module				
EtherNet/IP and Modbus TCP dual port module For connection to the Modbus TCP or EtherNet/IP network Ports: 2 RJ45 connectors ■ 10/100 Mbps, half duplex and full duplex ■ Embedded Web server Requires cordset 490NTW000●●/●●U or 490NTC000●●/●●U	1	–	VW3A3720	0.020/ *0.044*
EtherNet/IP, Modbus TCP, and MD-Link dual port module For connection to the Modbus TCP or EtherNet/IP network and MultiDrive-Link Ports: 2 RJ45 connectors ■ 10/100 Mbps, half duplex and full duplex ■ Embedded Web server Requires cordset 490NTW000●●/●●U or 490NTC000●●/●●U	4	–	VW3A3721	0.020/ *0.044*
ConneXium cordsets *(3)*				
Straight shielded twisted pair cables equipped with 2 RJ45 connectors conforming to EIA/TIA-568 category 5 and IEC 11801/EN 50173-1, class D	2	2/ *6.6*	490NTW00002	–
		5/ *16.4*	490NTW00005	–
		12/ *39*	490NTW00012	–
Crossover shielded twisted pair cables equipped with 2 RJ45 connectors conforming to EIA/TIA-568 category 5 and IEC 11801/EN 50173-1, class D	3	5/ *16.4*	490NTC00005	–
		15/ *49*	490NTC00015	–
Straight shielded twisted pair cables equipped with 2 RJ45 connectors conforming to UL and CSA 22.1	2	2/ *6.6*	490NTW00002U	–
		5/ *16.4*	490NTW00005U	–
		12/ *39*	490NTW00012U	–

(1) Altivar Process drives can only take one communication module.
(2) Please refer to the Modicon M580 automation platform catalog.
(3) Also exist in 40 and 80 m/131 and 262 ft lengths. For other ConneXium connection accessories, please refer to the Modicon Ethernet Switch catalog.

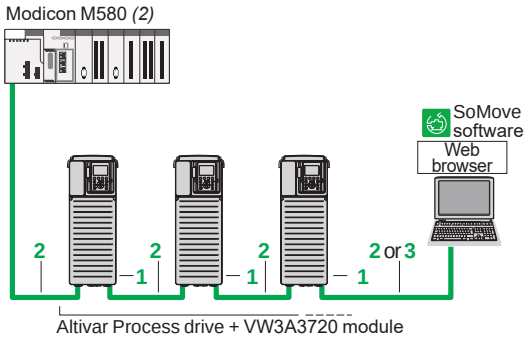

Example of connection on an EtherNet/IP network

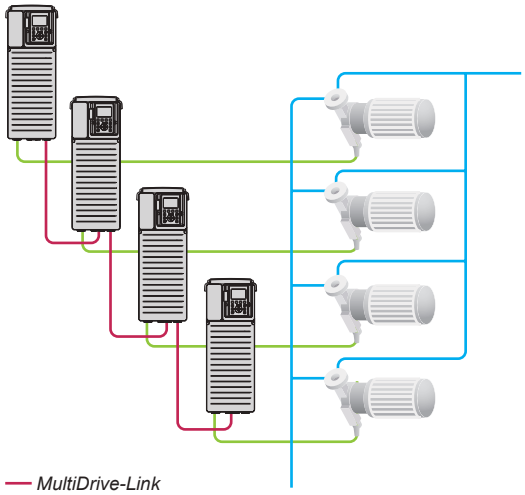

MultiDrive-Link
VSD

Example of connection with MD-Link

Variable speed drives

Altivar Process ATV600

Communication buses and networks

Option: Communication modules

PF514340

VW3A3608

PF514341

VW3A3618

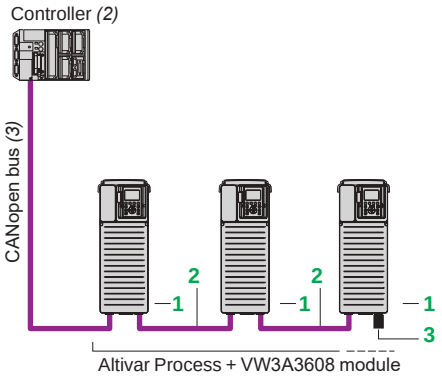

Optimized solution for daisy chain connection to the CANopen bus

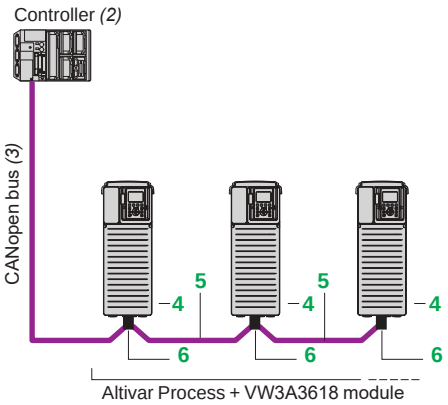

Example of connection to the CANopen bus via SUB-D connector

CANopen bus *(1)*

Description	Item	Length m/ *ft*	Reference	Weight kg/ *lb*
Communication module				
CANopen daisy chain module Ports: 2 RJ45 connectors	1	–	VW3A3608	–
Connection to RJ45 connector (optimized solution for daisy chain connection on CANopen bus)				
CANopen cordsets equipped with 2 RJ45 connectors	2	0.3/ *0.98*	VW3CANCARR03	0.050/ *0.110*
		1/ *3.28*	VW3CANCARR1	0.500/ *1.102*
CANopen line terminator for RJ45 connector	3	–	TCSCAR013M120	–
Communication module				
CANopen SUB-D module Ports: 1 x 9-way male SUB-D connector	4	–	VW3A3618	–
Connection to SUB-D connector				
CANopen cables *(3) (4)* Standard cable, CE mark Low smoke zero halogen Flame-retardant (IEC 60332-1)	5	50/ *164*	TSXCANCA50	4.930/ *10.869*
		100/ *328*	TSXCANCA100	8.800/ *19.401*
		300/ *984*	TSXCANCA300	24.560/ *54.145*
CANopen cables *(3) (4)* UL certification, CE mark Flame-retardant (IEC 60332-2)	5	50/ *164*	TSXCANCB50	3.580/ *7.893*
		100/ *328*	TSXCANCB100	7.840/ *17.284*
		300/ *984*	TSXCANCB300	21.870/ *48.215*
CANopen cables *(3) (4)* Cable for harsh environments or mobile installations, CE mark Low smoke zero halogen Flame-retardant (IEC 60332-1)	5	50/ *164*	TSXCANCD50	3.510/ *7.738*
		100/ *328*	TSXCANCD100	7.770/ *17.130*
		300/ *984*	TSXCANCD300	7.770/ *17.130*
IP20 straight CANopen connector *(5)* 9-way female SUB-D connector with line terminator that can be deactivated For connecting CAN-H, CAN-L, CAN-GND	6	–	TSXCANKCDF180T	0.049/ *0.108*

(1) Altivar Process drives can only take one communication module.
(2) Please refer to the Modicon automation platform catalogs.
(3) Cable depends on the controller, please refer to the CANopen for machines catalog.
(4) Standard environment:
- *No particular environmental constraints*
- *Operating temperature between 5 °C and 60 °C/41 °F and 140 °F*
- *Fixed installation*

Harsh environment:
- *Resistance to hydrocarbons, industrial oils, detergents, solder splashes*
- *Relative humidity up to 100%*
- *Saline atmosphere*
- *Operating temperature between -10 °C and +70 °C/+14 °F and +158 °F*
- *Significant temperature variations*

(5) Only straight connectors are compatible with Altivar Process drives.

Variable speed drives

Altivar Process ATV600

Communication buses and networks

Option: Communication modules

PF095129

VW3A3628

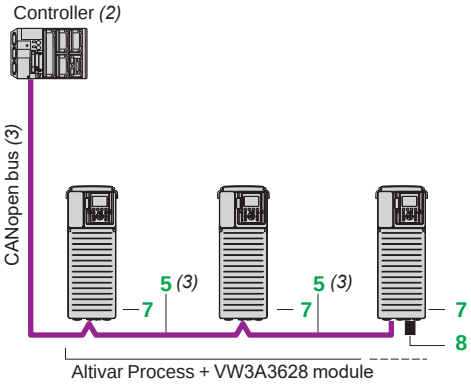

Example of connection to the CANopen bus with a screw terminal block

CANopen bus (continued) (1)				
Description	**Item**	**Length m/ ft**	**Reference**	**Weight kg/ lb**
Communication module				
CANopen module Port: 1 x 5-way screw terminal block	7	–	VW3A3628	–
Connection to screw terminal block				
CANopen IP20 cordsets *(3)* equipped with 2 x 9-way female SUB-D connectors Standard cable, CE mark. Low smoke zero halogen Flame-retardant (IEC 60332-1)	5	0.3/ *0.98*	TSXCANCADD03	0.091/ *0.201*
		1/ *3.28*	TSXCANCADD1	0.143/ *0.315*
		3/ *9.84*	TSXCANCBDD3	0.268/ *0.591*
		5/ *16.40*	TSXCANCBDD5	0.400/ *0.882*
IP20 CANopen tap junction boxes equipped with: ■ 4 x 9-way male SUB-D connectors + screw terminal block for trunk cable tap link ■ Line terminator	–	–	TSXCANTDM4	0.196/ *0.432*
IP20 CANopen tap junction boxes equipped with: ■ 2 screw terminal blocks for trunk cable tap link ■ 2 RJ45 connectors for connecting drives ■ 1 RJ45 connector for connecting a PC	–	–	VW3CANTAP2	0.480/ *1.058*
CANopen line terminator for screw terminal connector *(4)*	8	–	TCSCAR01NM120	–

(1) Altivar Process drives can only take one communication module.
(2) Please refer to the Modicon automation platform catalogs.
(3) Cable depends on the controller, please refer to the CANopen for machines catalog.
(4) Sold in lots of 2.

Variable speed drives

Altivar Process ATV600

Communication buses and networks
Option: Communication modules

PF 514350

VW3A3627

PROFINET bus *(1) (2)*

Description	Reference	Weight kg/ *lb*
Communication module		
PROFINET module equipped with 2 RJ45 connectors	VW3A3627	0.290/ *0.639*

PF095130

VW3A3607

PROFIBUS DP V1 bus *(1) (3)*

Description	Reference	Weight kg/ *lb*
Communication module		
PROFIBUS DP V1 module Port: 1 x 9-way female SUB-D connector Conforming to PROFIBUS DP V1 Profiles supported: ■ CiA 402 drive ■ Profidrive Offers several message handling modes based on DP V1	VW3A3607	0.140/ *0.309*
SUB-D connection		
IP20 straight connectors *(4)* for Profibus module	LU9AD7	–

PF095144

VW3A3619

POWERLINK network *(5)*

Description	Reference	Weight kg/*lb*
Ethernet POWERLINK communication module Port: 2 RJ45 connectors	VW3A3619	0.300/ *0.660*

(1) Altivar Process drives can only take one communication module.
(2) Minimum version compatible with Altivar Process: V1.2.06.
(3) Minimum version compatible with Altivar Process: V1.9.01.
(4) Only straight connectors are compatible with Altivar Process drives.
(5) Minimum Altivar Process firmware version compatible with Powerlink module: V2.2.

Variable speed drives

Altivar Process ATV600

Communication buses and networks

Option: Communication modules

PF514345

VW3A3609

ATVPro_62317_CPMFS17001B

VW3A3725

DeviceNet bus *(1) (2)*

Description	Reference	Weight kg/ *lb*
Communication module		
DeviceNet module Port: 1 removable 5-way screw connector Profiles supported: ■ CIP AC DRIVE ■ CiA 402 drive	VW3A3609	0.300/ *0.661*

BACnet MSTP *(1) (2)*

Description	Reference	Weight kg/ *lb*
Communication module		
BACnet module Port: RS485 5-pin removable terminal block - 2 twisted pairs	VW3A3725	0.035/ *0.08*

(1) Altivar Process drives can only take one communication module.
(2) Minimum version compatible with Altivar Process: V1.7.

Variable speed drives

Altivar Process ATV600

Option: Passive filters

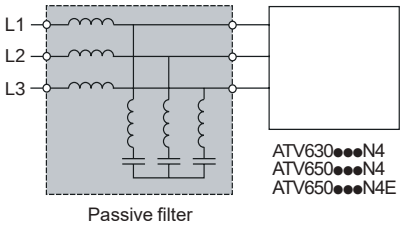

Altivar Process drive with passive filter

Presentation

Passive filters are used to obtain total harmonic distortion of less than 10% or 5%. Reactive power increases at no load or low load. To help reduce this reactive power, the filter capacitors can be disconnected (see the diagrams on our website).
Passive filters provide IP20 protection.

Applications

Reduction of current harmonics in order to use drives in the first environment (restricted distribution, domestic applications).

Variable speed drives

Altivar Process ATV600

Option: Passive filters

PF140347

VW3A46106

Passive filters: 400 V 50 Hz three-phase supply

Motor rating		For Altivar Process drives	Filter Nominal current		Quantity required per drive	Reference (1)	Weight
			Input	Output			
kW	HP		A	A			kg/ lb
THDi < 10%							
0.75	1	**ATV630U07N4 ATV650U07N4 ATV650U07N4E**	6	6.2	1	VW3A46101	12.000/ 26.455
1.5	2	**ATV630U15N4 ATV650U15N4 ATV650U15N4E**					
2.2	3	**ATV630U22N4 ATV650U22N4 ATV650U22N4E**					
3	–	**ATV630U30N4 ATV650U30N4 ATV650U30N4E**					
4	5	**ATV630U40N4 ATV650U40N4 ATV650U40N4E**	10	10.4	1	VW3A46102	13.500/ 29.762
5.5	7.5	**ATV630U55N4 ATV650U55N4 ATV650U55N4E**					
7.5	10	**ATV630U75N4 ATV650U75N4 ATV650U75N4E**	14	14.5	1	VW3A46103	16.300/ 35.935
11	15	**ATV630D11N4 ATV650D11N4 ATV650D11N4E**	22	23	1	VW3A46104	22.000/ 48.502
15	20	**ATV630D15N4 ATV650D15N4 ATV650D15N4E**	29	30	1	VW3A46105	25.000/ 55.116
18.5	25	**ATV630D18N4 ATV650D18N4 ATV650D18N4E**	35	37	1	VW3A46106	37.000/ 81.571
22	30	**ATV630D22N4 ATV650D22N4 ATV650D22N4E**	43	45	1	VW3A46107	39.000/ 85.980
30	40	**ATV630D30N4 ATV650D30N4 ATV650D30N4E**	58	60	1	VW3A46108	44.000/ 97.003
37	50	**ATV630D37N4 ATV650D37N4 ATV650D37N4E**	72	75	1	VW3A46109	56.000/ 123.459
45	60	**ATV630D45N4 ATV650D45N4 ATV650D45N4E**	86	90	1	VW3A46110	62.000/ 136.686
55	75	**ATV630D55N4 ATV650D55N4 ATV650D55N4E**	101	105	1	VW3A46111	74.000/ 163.142
75	100	**ATV630D75N4 ATV650D75N4 ATV650D75N4E**	144	150	1	VW3A46112	85.000/ 187.393
90	125	**ATV630D90N4 ATV650D90N4 ATV650D90N4E**	180	187	1	VW3A46113	102.000/ 224.871
110	150	**ATV630C11N4**	217	225	1	VW3A46114	119.000/ 262.350
132	200	**ATV630C13N4**	252	262	1	VW3A46115	136.000/ 299.828
160	250	**ATV630C16N4**	304	316	1	VW3A46116	142.000/ 313.056
220	350	**ATV630C22N4**	380	395	1	VW3A46118	172.000/ 379.195
250	400	**ATV630C25N4**	433	450	1	VW3A46119	205.000/ 451.947
315	500	**ATV630C31N4**	304	316	2	VW3A46116	142.000/ 313.056

*(1) When used with **ATV650U07N4/N4E...D90N4/N4E** drives, the filter must be mounted in a separate enclosure to maintain IP55 protection for the installation.*

Variable speed drives

Altivar Process ATV600

Option: Passive filters

Passive filters: 400 V 50 Hz three-phase supply

Motor rating		For Altivar Process drives	Filter Nominal current		Quantity required per drive	Reference (1)	Weight
			Input	Output			
kW	*HP*		A	A			kg/ *lb*
THDi < 5%							
0.75	*1*	**ATV630U07N4** **ATV650U07N4** **ATV650U07N4E**	6	6.2	1	VW3A46120	16.000/ *35.274*
1.5	*2*	**ATV630U15N4** **ATV650U15N4** **ATV650U15N4E**					
2.2	*3*	**ATV630U22N4** **ATV650U22N4** **ATV650U22N4E**					
3	–	**ATV630U30N4** **ATV650U30N4** **ATV650U30N4E**					
4	*5*	**ATV630U40N4** **ATV650U40N4** **ATV650U40N4E**	10	10.4	1	VW3A46121	18.000/ *39.683*
5.5	*7.5*	**ATV630U55N4** **ATV650U55N4** **ATV650U55N4E**					
7.5	*10*	**ATV630U75N4** **ATV650U75N4** **ATV650U75N4E**	14	14.5	1	VW3A46122	20.000/ *44.092*
11	*15*	**ATV630D11N4** **ATV650D11N4** **ATV650D11N4E**	22	23	1	VW3A46123	30.000/ *66.139*
15	*20*	**ATV630D15N4** **ATV650D15N4** **ATV650D15N4E**	29	30	1	VW3A46124	34.000/ *74.957*
18.5	*25*	**ATV630D18N4** **ATV650D18N4** **ATV650D18N4E**	35	37	1	VW3A46125	53.000/ *116.845*
22	*30*	**ATV630D22N4** **ATV650D22N4** **ATV650D22N4E**	43	45	1	VW3A46126	58.000/ *127.868*
30	*40*	**ATV630D30N4** **ATV650D30N4** **ATV650D30N4E**	58	60	1	VW3A46127	76.000/ *167.551*
37	*50*	**ATV630D37N4** **ATV650D37N4** **ATV650D37N4E**	72	75	1	VW3A46128	98.000/ *216.053*
45	*60*	**ATV630D45N4** **ATV650D45N4** **ATV650D45N4E**	86	90	1	VW3A46129	104.000/ *229.281*
55	*75*	**ATV630D55N4** **ATV650D55N4** **ATV650D55N4E**	101	105	1	VW3A46130	106.000/ *233,690*
75	*100*	**ATV630D75N4** **ATV650D75N4** **ATV650D75N4E**	144	150	1	VW3A46131	126.000/ *277.782*
90	*125*	**ATV630D90N4** **ATV650D90N4** **ATV650D90N4E**	180	187	1	VW3A46132	135.000/ *297.623*
110	*150*	**ATV630C11N4**	217	225	1	VW3A46133	172.000/ *379.195*
132	*200*	**ATV630C13N4**	252	262	1	VW3A46134	206.000/ *454.152*
160	*250*	**ATV630C16N4**	304	316	1	VW3A46135	221.000/ *487.221*
220	350	**ATV630C22N4**	380	395	1	VW3A46137	265.000/ *584.225*
250	400	**ATV630C25N4**	433	450	1	VW3A46138	272.000/ *599.657*
315	500	**ATV630C31N4**	304	316	2	VW3A46135	221.000/ *487.221*

*(1) When used with **ATV650U07N4/N4E...D90N4/N4E** drives, the filter must be mounted in a separate enclosure to maintain IP55 protection for the installation.*

Variable speed drives

Altivar Process ATV600

Option: Passive filters

Passive filters: 460 V 60 Hz three-phase supply

Motor rating		For Altivar Process drives	Filter Nominal current		Quantity required per drive	Reference (1)	Weight
			Input	Output			
kW	*HP*		A	A			kg/ *lb*
THDi < 10%							
0.75	*1*	**ATV630U07N4 ATV650U07N4 ATV650U07N4E**	6	6.2	1	VW3A46139	12.000/ *26.455*
1.5	*2*	**ATV630U15N4 ATV650U15N4 ATV650U15N4E**					
2.2	*3*	**ATV630U22N4 ATV650U22N4 ATV650U22N4E**					
3	–	**ATV630U30N4 ATV650U30N4 ATV650U30N4E**					
4	*5*	**ATV630U40N4 ATV650U40N4 ATV650U40N4E**	10	10.4	1	VW3A46140	13.500/ *29.762*
5.5	*7.5*	**ATV630U55N4 ATV650U55N4 ATV650U55N4E**					
7.5	*10*	**ATV630U75N4 ATV650U75N4 ATV650U75N4E**	14	14.5	1	VW3A46141	16.300/ *35.935*
11	*15*	**ATV630D11N4 ATV650D11N4 ATV650D11N4E**	19	19.5	1	VW3A46142	22.000/ *48.502*
15	*20*	**ATV630D15N4 ATV650D15N4 ATV650D15N4E**	25	26	1	VW3A46143	23.000/ *50.706*
18.5	*25*	**ATV630D18N4 ATV650D18N4 ATV650D18N4E**	31	32	1	VW3A46144	33.000/ *72.752*
22	*30*	**ATV630D22N4 ATV650D22N4 ATV650D22N4E**	36	37	1	VW3A46145	37.000/ *81.571*
30	*40*	**ATV630D30N4 ATV650D30N4 ATV650D30N4E**	48	50	1	VW3A46146	39.000/ *85.980*
37	*50*	**ATV630D37N4 ATV650D37N4 ATV650D37N4E**	60	62	1	VW3A46147	43.000/ *94.799*
45	*60*	**ATV630D45N4 ATV650D45N4 ATV650D45N4E**	73	76	1	VW3A46148	55.000/ *121.254*
55	*75*	**ATV630D55N4 ATV650D55N4 ATV650D55N4E**	95	99	1	VW3A46149	62.000/ *136.686*
75	*100*	**ATV630D75N4 ATV650D75N4 ATV650D75N4E**	118	122	1	VW3A46150	74.000/ *163.142*
90	*125*	**ATV630D90N4 ATV650D90N4 ATV650D90N4E**	154	160	1	VW3A46151	85.000/ *187.393*
110	*150*	**ATV630C11N4**	183	190	1	VW3A46152	102.000/ *224.871*
132	*200*	**ATV630C13N4**	231	240	1	VW3A46153	119.000/ *262.350*
160	*250*	**ATV630C16N4**	291	302.5	1	VW3A46154	142.000/ *313.056*
220	350	**ATV630C22N4**	355	369	1	VW3A46155	162.000/ *357.149*
250	400	**ATV630C25N4**	436	450	1	VW3A46157	205.000/ *451.948*
315	500	**ATV630C31N4**	231	240	2	VW3A46153	119.000/ *262.35*

*(1) When used with **ATV650U07N4/N4E...D90N4/N4E** drives, the filter must be mounted in a separate enclosure to maintain IP55 protection for the installation.*

Variable speed drives

Altivar Process ATV600

Option: Passive filters

Passive filters: 460 V 60 Hz three-phase supply

Motor rating		For Altivar Process drives	Filter Nominal current		Quantity required per drive	Reference (1)	Weight
			Input	Output			
kW	HP		A	A			kg/ lb
THDi < 5%							
0.75	1	**ATV630U07N4** **ATV650U07N4** **ATV650U07N4E**	6	6.2	1	VW3A46158	16.000/ 35.274
1.5	2	**ATV630U15N4** **ATV650U15N4** **ATV650U15N4E**					
2.2	3	**ATV630U22N4** **ATV650U22N4** **ATV650U22N4E**					
3	–	**ATV630U30N4** **ATV650U30N4** **ATV650U30N4E**					
4	5	**ATV630U40N4** **ATV650U40N4** **ATV650U40N4E**	10	10.4	1	VW3A46159	18.000/ 39.683
5.5	7.5	**ATV630U55N4** **ATV650U55N4** **ATV650U55N4E**					
7.5	10	**ATV630U75N4** **ATV650U75N4** **ATV650U75N4E**	14	14.5	1	VW3A46160	20.000/ 44.092
11	15	**ATV630D11N4** **ATV650D11N4** **ATV650D11N4E**	19	19.5	1	VW3A46161	30.000/ 66.139
15	20	**ATV630D15N4** **ATV650D15N4** **ATV650D15N4E**	25	26	1	VW3A46162	34.000/ 74.957
18.5	25	**ATV630D18N4** **ATV650D18N4** **ATV650D18N4E**	31	32	1	VW3A46163	52.000/ 114.640
22	30	**ATV630D22N4** **ATV650D22N4** **ATV650D22N4E**	36	37	1	VW3A46164	53.000/ 116.845
30	40	**ATV630D30N4** **ATV650D30N4** **ATV650D30N4E**	48	50	1	VW3A46165	57.000/ 125.663
37	50	**ATV630D37N4** **ATV650D37N4** **ATV650D37N4E**	60	62	1	VW3A46166	75.000/ 165.347
45	60	**ATV630D45N4** **ATV650D45N4** **ATV650D45N4E**	73	76	1	VW3A46167	97.000/ 213.848
55	75	**ATV630D55N4** **ATV650D55N4** **ATV650D55N4E**	95	99	1	VW3A46168	104.000/ 229.281
75	100	**ATV630D75N4** **ATV650D75N4** **ATV650D75N4E**	118	122	1	VW3A46169	106.000/ 233.690
90	125	**ATV630D90N4** **ATV650D90N4** **ATV650D90N4E**	154	160	1	VW3A46170	126.000/ 277.782
110	150	**ATV630C11N4**	183	190	1	VW3A46171	135.000/ 297.624
132	200	**ATV630C13N4**	231	240	1	VW3A46172	172.000/ 379.195
160	250	**ATV630C16N4**	291	316	1	VW3A46173	221.000/ 487.221
220	350	**ATV630C22N4**	355	369	1	VW3A46174	229.000/ 504.858
250	400	**ATV630C25N4**	436	450	1	VW3A46176	272.000/ 599.657
315	500	**ATV630C31N4**	231	240	2	VW3A46172	172.000/ 379.195

*(1) When used with **ATV650U07N4/N4E...D90N4/N4E** drives, the filter must be mounted in a separate enclosure to maintain IP55 protection for the installation.*

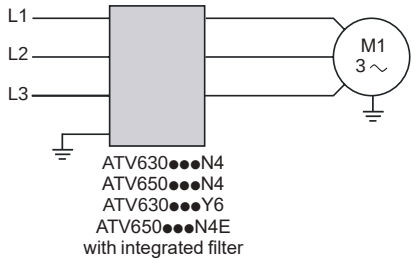

Altivar Process drive with integrated EMC filter

Integrated EMC filters

Altivar Process drives (except ATV630U07M3...D75M3) have integrated radio interference input filters in accordance with the EMC standard for variable speed electrical power drive "products" IEC/EN 61800-3, edition 2, category C2 or C3 in environment 1 or 2, and to comply with the European EMC (electromagnetic compatibility) directive.

The integrated EMC filter runs off the leakage current to ground. The leakage current can be reduced by disconnecting the built-in EMC filter (please refer to the Installation Manual). In this configuration, the product does not comply with the European EMC directive.

Corresponding drive	Maximum length of shielded cable *(1)* acc. to	
	IEC/EN 61800-3 category C2	IEC/EN 61800-3 category C3
	m/*ft*	m/*ft*
Three-phase supply voltage: 380…480 V		
ATV630U07N4...D45N4	50/*164*	150/*492*
ATV630D55N4...C16N4	–	150/*492*
ATV630U07N4Z...D45N4Z	10/*32*	50/*164*
ATV630D55N4Z...D90N4Z	–	50/*164*
ATV630C22N4...C31N4	–	50/*164*
ATV630C11N4F...C31N4F ATV650C11N4F...C31N4F	–	300/*984*
Three-phase supply voltage: 380…480 V IP55		
ATV650U07N4/N4E...D45N4/N4E	50/*164*	150/*492*
ATV650D55N4/N4E...D90N4/N4E	–	150/*492*
Three-phase supply voltage: 500...690 V IP00		
ATV630U22Y6...D90Y6	–	25/*82*

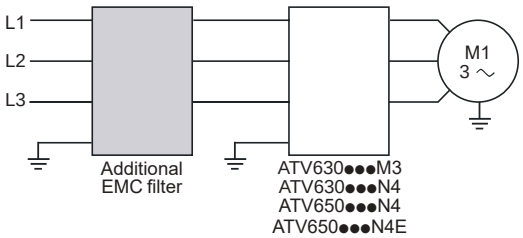

Altivar Process drive with additional EMC filter

Additional EMC input filters

Additional EMC input filters can be used to meet more stringent requirements and are designed to reduce conducted emissions on the line supply below the limits of standard IEC/EN 61800-3 category C1, C2, or C3.

Use according to the type of line supply

Use of these additional filters is only possible on TN (neutral connection) and TT (grounded neutral) type systems.

Standard IEC/EN 61800-3, appendix D2.1, states that on IT systems (isolated or impedance grounded neutral), filters can cause permanent insulation monitors to operate in a random manner.

If a machine needs to be installed on an IT system, one solution is to insert an isolation transformer and connect the machine locally to a TN or TT system.

(1) The maximum lengths are given as examples only, as they vary depending on the stray capacitance of the motors and the cables used. If motors are connected in parallel, it is the total length of all cables that should be taken into account.

Variable speed drives
Altivar Process ATV600
Option: Additional EMC input filters

PF130915

VW3A4701

PF130922

VW3A4708

Additional EMC input filters

References

Corresponding drive	Maximum length of shielded cable (1) IEC/EN 61800-3 category C1 (3)	IEC/EN 61800-3 category C2 (3)	IEC/EN 61800-3 category C3 (3)	In (2)	If	Degree of protection	Reference	Weight
	m/*ft*	m/*ft*	m/*ft*	A	mA	IP		kg/ *lb*
Three-phase supply voltage: 200...240 V 50 Hz								
ATV630U07M3...U15M3	50/*164*	150/*492*	300/*984*	8	7.6	20	VW3A4701	2.000/ *4.409*
ATV630U22M3...U30M3	50/*164*	150/*492*	300/*984*	15	7.6	20	VW3A4702	2.400/ *5.291*
ATV630U40M3...U75M3	50/*164*	150/*492*	300/*984*	35	7.6	20	VW3A4703	4.100/ *9.039*
ATV630D11M3	50/*164*	150/*492*	300/*984*	50	7.6	20	VW3A4704	5.200/ *11.464*
ATV630D15M3	50/*164*	150/*492*	300/*984*	70	13.9	20	VW3A4705	6.100/ *13.448*
ATV630D18M3...D22M3	50/*164*	150/*492*	300/*984*	100	13.9	20	VW3A4706	6.500/ *14.330*
ATV630D30M3...D37M3	50/*164*	150/*492*	300/*984*	160	13.9	20	VW3A4707	8.500/ *18.739*
ATV630D45M3	50/*164*	150/*492*	300/*984*	200	13.9	20	VW3A4708	9.500/ *20.944*
ATV630D55M3	50/*164*	150/*492*	300/*984*	240	27.8	00	VW3A4709	15.000/ *33.069*
ATV630D75M3	50/*164*	150/*492*	300/*984*	305	27.8	00	VW3A4710	17.000/ *37.479*
Three-phase supply voltage: 380...480 V 50 Hz								
ATV630U07N4...U22N4(Z) ATV650U07N4...U22N4 ATV650U07N4E...U22N4E	50/*164*	150/*492*	300/*984*	8	7.6	20	VW3A4701	2.000/ *4.409*
ATV630U30N4...U55N4(Z) ATV650U30N4...U55N4 ATV650U30N4E...U55N4E	50/*164*	150/*492*	300/*984*	15	7.6	20	VW3A4702	2.400/ *5.291*
ATV630U75N4...D15N4(Z) ATV650U75N4...D15N4 ATV650U75N4E...D15N4E	50/*164*	150/*492*	300/*984*	35	7.6	20	VW3A4703	4.100/ *9.039*
ATV630D18N4...D22N4(Z) ATV650D18N4...D22N4 ATV650D18N4E...D22N4E	50/*164*	150/*492*	300/*984*	50	7.6	20	VW3A4704	5.200/ *11.464*
ATV630D30N4(Z) ATV650D30N4 ATV650D30N4E	50/*164*	150/*492*	300/*984*	70	13.9	20	VW3A4705	6.100/ *13.448*
ATV630D37N4...D45N4(Z) ATV650D37N4...D45N4 ATV650D37N4E...D45N4E	50/*164*	150/*492*	300/*984*	100	13.9	20	VW3A4706	6.500/ *14.330*
ATV630D55N4(Z) ATV650D55N4 ATV650D55N4E	50/*164*	150/*492*	300/*984*	160	13.9	20	VW3A4707	8.500/ *18.739*
ATV630D75N4...D90N4(Z) ATV650D75N4...D90N4 ATV650D75N4E...D90N4E	50/*164*	150/*492*	300/*984*	200	13.9	20	VW3A4708	9.500/ *20.944*
ATV630C11N4...C13N4	–	150/*492*	300/*984*	240	27.8	00	VW3A4709	15.000/ *33.069*
ATV630C16N4	–	150/*492*	300/*984*	305	27.8	00	VW3A4710	17.000/ *37.479*
ATV630C22N4...C31N4	50/*164*	300/*984*	-	546	500	00	VW3A4411	25.000/ *57.320*

(1) The maximum lengths are given as examples only, as they vary depending on the stray capacitance of the motors and the cables used. If motors are connected in parallel, it is the total length of all cables that should be taken into account.
(2) Nominal filter current.
(3) Values given depend on the nominal switching frequency of the drive. This frequency depends on the drive rating.

Variable speed drives

Altivar Process ATV600
Option: Additional EMC input filters
Substitution kits for ATV61/71

IP21 protection kit for IP20 filters

Additional input filters provide IP20 protection as standard. This kit can be used to provide IP21 or UL Type 1 protection.

Description	For filters	Reference	Weight kg/ *lb*
Mechanical kit including cover and cable clamps	**VW3A4701**	VW3A47901	0.200/ *0.441*
	VW3A4702	VW3A47902	0.300/ *0.661*
	VW3A4703	VW3A47903	0.400/ *0.882*
	VW3A4704	VW3A47904	0.500/ *1.102*
	VW3A4705	VW3A47905	0.900/ *1.984*
	VW3A4706	VW3A47906	1.000/ *2.205*
	VW3A4707	VW3A47907	1.500/ *3.307*
	VW3A4708	VW3A47908	2.000/ *4.409*

Substitution kit VW3A93111

Substitution kits for ATV61/71

This kit is used to install an Altivar Process drive in the place of an Altivar 61 or Altivar 71 drive using the same fixing holes. It includes the mechanical adapters required for mounting.

Corresponding drive	From ATV61/71	Kit reference	Weight kg/ *lb*
ATV630U07N4Z...U22N4Z	S2	VW3A93111	–
	S3	VW3A93112	–
	S4	VW3A93113	–
ATV630U75N4Z, D11N4Z	S4	VW3A93114	–
	S5A	VW3A93115	–
ATV630D15N4Z...D22N4Z	S5B	VW3A93116	–
	S6	VW3A93116	–
ATV630D30N4Z...D45N4Z	S6	VW3A93117	–
	S7A	VW3A93117	–
	S8	VW3A93118	–
ATV630D55N4Z...D90N4Z	S8	VW3A93119	–
	S9	VW3A93120	–

Variable speed drives

Altivar Process ATV600

Harmonic Reduction

Option: AC line chokes

PF142110

VW3A4556

Line chokes

A line choke can be used to reduce harmonic distortion of the current produced by the drive.

The choke values are defined for a voltage drop between phases of 3% and 5% of the nominal supply voltage. Values higher than this will cause loss of torque.

Line chokes allow ATV630U22Y6...D90Y6 drives to be used in applications requiring a harmonic level of THDi 48%.

Chokes must be installed upstream of the drive.

References

Corresponding drive	Line supply Isc	Line chokes			Reference	Weight
		Inductance value	Nominal current	Losses		
	kA	mH	A	W		kg/ *lb*
Three-phase supply voltage: 500…690 V 50/60 Hz						
ATV630U22Y6...D40Y6	22	10	4	45	VW3A4551	1.500/ *2.204*
ATV630U55Y6...U75Y6	22	4	10	65	VW3A4552	3.000/ *6.613*
ATV630D11Y6...D15Y6	22	2	16	75	VW3A4553	3.500/ *7.716*
ATV630D18Y6...D22Y6	22	1	30	90	VW3A4554	6.000/ *13.227*
ATV630D30Y6...D45Y6	22	0.5	60	94	VW3A4555	11.000/ *24.250*
ATV630D55Y6...D90Y6	22	0.3	100	260	VW3A4556	16.000/ *35.274*

Variable speed drives

Altivar Process ATV600

Option: Output filters

dv/dt filters

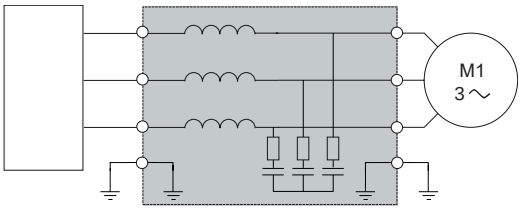

ATV630●●●M3
ATV630●●●N4
ATV650●●●N4
ATV650●●●N4E

dv/dt filter

Altivar Process drive with dv/dt filter

Presentation

Altivar Process drives with supply voltages of 200...240 V and 380...480 V operate with the following maximum motor cable lengths: 150 m/*492 ft* for shielded cables and 300 m/*984 ft* for unshielded cables.
For a supply voltage of 500...690 V, the maximum motor cable lengths are 10 m/*32 ft* for shielded cables and 20 m/*65 ft* for unshielded cables.

To limit the impact of dv/dt and overvoltages in the motor, it is advisable to add an output filter if the motor insulation type does not conform to IEC 600034-25:
- For cables <50 m, a dv/dt output filter
- For cables >50 m, a sinus filter (see page 2/45)

For further information, please consult the white paper An Improved Approach for Connecting VSD and Electric Motors.

Output filters are used to limit dv/dt at the motor terminals to 500 V/µs maximum for supply voltages up to 480 V, 750 V/µs maximum for a supply voltage of 500 V, and 1,000 V/µs maximum for a supply voltage of 690 V.

Output filters are designed to limit overvoltages at the motor terminals to less than:
- 800 V with a shielded cable 0 to 50 m (*0 to 164 ft*) long for a 400 V supply voltage
- 1,000 V with a shielded cable 50 to 150 m (*164 to 492 ft*) long for a 400 V supply voltage
- 1,500 V with a shielded cable 150 to 300 m (*492 to 984 ft*) long for a 400 V supply voltage (up to 500 m (*1,640 ft*) with an unshielded cable)
- 1,300 V for a 500 V supply voltage, cable length depending on the dv/dt filter combination
- 1,600 V for a 690 V supply voltage, cable length depending on the dv/dt filter combination

The performance of dv/dt filters will be affected if the maximum cable lengths are exceeded. For an application with several motors connected in parallel, the cable length must include all cabling. If a cable longer than that specified is used, the dv/dt filters may overheat.

The switching frequency must be less than 8 kHz.

dv/dt output filters

Corresponding drive	Maximum length of motor cable		Degree of protection	In *(3)*	Reference	Weight
	Maximum switching frequency *(1)*	Shielded cable *(2)*				
	kHz	m/*ft*	IP	A		kg/*lb*
Three-phase supply voltage: 200...240 V						
ATV630U07M3	4	300/*984*	20	6	VW3A5301	11.000/*24.251*
ATV630U15M3...U30M3	4	300/*984*	20	15	VW3A5302	12.000/*26.455*
ATV630U40M3	4	300/*984*	20	25	VW3A5303	12.000/*26.455*
ATV630U55M3...D11M3	4	300/*984*	20	50	VW3A5304	18.000/*39.683*
ATV630D15M3...D22M3	4	300/*984*	20	95	VW3A5305	19.000/*41.888*
ATV630D30M3...D45M3	2.5	300/*984*	00	180	VW3A5306	22.000/*48.502*
ATV630D55M3...D75M3	2.5	300/*984*	00	305	VW3A5307	40.000/*88.185*

(1) The filters are designed to operate in a switching frequency range of between 2 and 8 kHz.
(2) Values given depend on the nominal switching frequency of the drive. This frequency depends on the drive rating. These cable lengths are given as examples only as they can vary depending on the application. They correspond to motors conforming to IEC 6034-25 and NEMA MG1/31.2006.
(3) Nominal filter current.

Variable speed drives

Altivar Process ATV600

Option: Output filters

dv/dt filters

IOP121624

VW3A5104

dv/dt output filters (continued)

Corresponding drive	Maximum length of motor cable: Maximum switching frequency (1)	Maximum length of motor cable: Shielded cable (2)	Degree of protection	In (3)	Reference (4)	Weight
	kHz	m/*ft*	IP	A		kg/ *lb*
Three-phase supply voltage: 380...480 V						
ATV630U07N4...U22N4 ATV650U07N4...U22N4 ATV650U07N4E...U22N4E	4	300/ *984*	20	6	VW3A5301	11.000/ *24.251*
ATV630U30N4...U55N4 ATV650U30N4...U55N4 ATV650U30N4E...U55N4E	4	300/ *984*	20	15	VW3A5302	12.000/ *26.455*
ATV630U75N4...D11N4 ATV650U75N4...D11N4 ATV650U75N4E...D11N4E	4	300/ *984*	20	25	VW3A5303	12.000/ *26.455*
ATV630D15N4...D22N4 ATV650D15N4...D22N4 ATV650D15N4E...D22N4E	4	300/ *984*	20	50	VW3A5304	18.000/ *39.683*
ATV630D30N4...D45N4 ATV650D30N4...D45N4 ATV650D30N4E...D45N4E	4	300/ *984*	20	95	VW3A5305	19.000/ *41.888*
ATV630D55N4...D90N4 ATV650D55N4...D90N4 ATV650D55N4E...D90N4E	2.5	300/ *984*	00	180	VW3A5306	22.000/ *48.502*
ATV630C11N4...C16N4	2.5	300/ *984*	00	305	VW3A5307	40.000/ *88.185*
ATV630C22N4	2.5	250/ *820*	00	481	VW3A5106	58.000/ *127.868*
ATV630C25N4...C31N4	2.5	200/ *656*	00	759	VW3A5107	93.000/ *205.230*
Three-phase supply voltage: 500…690 V						
ATV630U22Y6...U55Y6	6	50/ *164*	00	90	VW3A5103	10.000/ *22.046*
ATV630U75Y6, ATV630D11Y6	6	50/ *164*	00	90	VW3A5103	10.000/ *22.046*
	6	100/ *328*	00	215	VW3A5104	15.500/ *34.171*
ATV630D15Y6...D30Y6	2.5	50/ *164*	00	90	VW3A5103	10.000/ *22.046*
	2.5	70/ *230*	00	90	**2 x** VW3A5103	20.000/ *44.001*
	4	35/ *115*	00	90		
	4	150/ *492*	00	215	VW3A5104	15.500/ *34.171*
	6	100/ *328*	00	215		
	6	150/ *492*	00	215	**2 x** VW3A5104	31.000/ *68.342*
ATV630D37Y6...D90Y6	4	100/ *328*	00	215	VW3A5104	15.500/ *34.171*
	4	150/ *492*	00	215	**2 x** VW3A5104	31.000/ *68.342*

(1) The filters are designed to operate in a switching frequency range of between 2 and 8 kHz.
(2) Values given depend on the nominal switching frequency of the drive. This frequency depends on the drive rating. These cable lengths are given as examples only as they can vary depending on the application. They correspond to motors conforming to IEC 6034-25 and NEMA MG1/31.2006.
(3) Nominal filter current.
*(4) When used with **ATV650U07N4/N4E...D90N4/N4E** drives, the filter must be mounted in a separate enclosure to maintain IP55 protection for the installation.*

Variable speed drives

Altivar Process ATV600

Option: Output filters

Protection kits for dv/dt filters

PF140375

VW3A53902

IP21 protection kit for IP20 filters			
Description	**Corresponding dv/dt filter**	**Reference**	**Weight kg/ *lb***
Mechanical kit including cover and cable clamps	**VW3A5301** **VW3A5302** **VW3A5303**	VW3A53902	1.300/ *2.866*
	VW3A5304	VW3A53903	1.700/ *3.748*
	VW3A5305	VW3A53905	3.200/ *7.055*

Variable speed drives

Altivar Process ATV600

Option: Output filters

Sinus filters

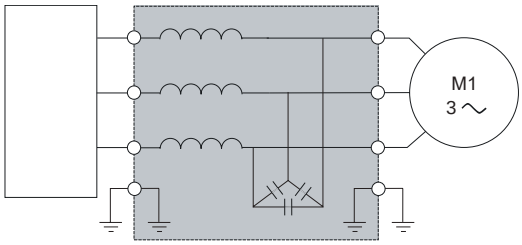

ATV630●●●M3
ATV630●●●N4
ATV630●●●Y6
ATV650●●●N4
ATV650●●●N4E

Sinus filter

Altivar Process drive with sinus filter

Presentation

Sinus filters allow Altivar Process drives to operate with long motor cables:
- 500 m *(1,640 ft)* with a shielded cable
- 1,000 m *(3,280 ft)* with an unshielded cable

The minimum switching frequency at which sinus filters can operate is 2 kHz. This is the default value when the sinus filter function is activated on the variable speed drive (please refer to the Programming Manual)

The output frequency must be less than 100 Hz.

At 100% load, the voltage drop is less than 8% with output frequency 50 Hz and switching frequency 4 kHz.

Applications

For applications requiring:
- Long cable runs
- Motors connected in parallel
- Submersible pumps sensitive to dv/dt
- An intermediate transformer between the drive and the motor

Sinus filters

Corresponding drive	Maximum length of unshielded motor cable	Nominal current	Degree of protection	Reference *(1)*	Weight
	m/ *ft*	A	IP		kg/ *lb*
Three-phase supply voltage: 200...240 V					
ATV630U07M3	1,000/ *3,280*	6	20	VW3A5401	10.000/ *22.046*
ATV630U15M3...U30M3	1,000/ *3,280*	15	20	VW3A5402	13.500/ *29.762*
ATV630U40M3	1,000/ *3,280*	25	20	VW3A5403	20.000/ *44.092*
ATV630U55M3...D11M3	1,000/ *3,280*	50	20	VW3A5404	35.000/ *77.162*
ATV630D15M3...D22M3	1,000/ *3,280*	95	20	VW3A5405	60.000/ *132.277*
ATV630D30M3...D45M3	1,000/ *3,280*	180	00	VW3A5406	90.000/ *198.416*
ATV630D75M3 *(2)*	1,000/ *3,280*	305	00	VW3A5407	134.000/ *295.419*

(1) The filters are designed to operate in a switching frequency range of between 4 and 8 kHz.
(2) In "Normal Duty", apply a derating of 1 to the drive nominal power with a minimum switching frequency of 4 kHz.
For example: An ATV630D75M3 drive with sinus filter can be used on a 55 kW motor.

Variable speed drives

Altivar Process ATV600

Option: Output filters

Sinus filters and protection kits

F19_FILT_CPSCT17002

VW3A5216

F19_FILT_CPSCT17005

VW3A5219

Sinus filters (continued)

Corresponding drive	Maximum length of unshielded motor cable	Nominal current	Degree of protection	Reference (1) (2)	Weight
	m/ *ft*	A	IP		kg/ *lb*
Three-phase supply voltage: 380...480 V					
ATV630U07N4...U22N4 ATV650U07N4...U22N4 ATV650U07N4E...U22N4E	1,000/ *3,280*	6	20	VW3A5401	10.000/ *22.046*
ATV630U30N4...U55N4 ATV650U30N4...U55N4 ATV650U30N4E...U55N4E	1,000/ *3,280*	15	20	VW3A5402	13.500/ *29.762*
ATV630U75N4...D11N4 ATV650U75N4...D11N4 ATV650U75N4E...D11N4E	1,000/ *3,280*	25	20	VW3A5403	20.000/ *44.092*
ATV630D15N4...D22N4 ATV650D15N4...D22N4 ATV650D15N4E...D22N4E	1,000/ *3,280*	50	20	VW3A5404	35.000/ *77.162*
ATV630D30N4...D45N4 ATV650D30N4...D45N4 ATV650D30N4E...D45N4E	1,000/ *3,280*	95	20	VW3A5405	60.000/ *132.277*
ATV630D55N4...D90N4 ATV650D55N4...D90N4 ATV650D55N4E...D90N4E	1,000/ *3,280*	180	00	VW3A5406	90.000/ *198.416*
ATV630C13N4...C16N4 *(3)*	1,000/ *3,280*	305	00	VW3A5407	134.000/ *295.419*
ATV630C22N4 *(3)*	400/ *1,312*	400	00	VW3A5209	190.000/ *418.878*
ATV630C25N4...C31N4 *(3)*	400/ *1,312*	600	00	VW3A5210	260.000/ *573.202*
Three-phase supply voltage: 500...690 V					
ATV630U22Y6...U75Y6	500/ *1,640*	13	20	VW3A5215	13.500/ *29.762*
ATV630D11Y6...D22Y6	500/ *1,640*	28	20	VW3A5216	25.400/ *55.997*
ATV630D30Y6...D37Y6	500/ *1,640*	45	20	VW3A5217	38.000/ *83.776*
ATV630D45Y6...D55Y6	750/ *2,460*	75	20	VW3A5218	75.000/ *165.347*
ATV630D75Y6...D90Y6	750/ *2,460*	115	20	VW3A5219	106.000/ *233.690*

IP21 protection kit for IP20 filters

Description	Corresponding sinus filter	Reference	Weight kg/ *lb*
Mechanical kit including cover and cable clamps	**VW3A5401** **VW3A5402**	VW3A53901	1.000/ *2.205*
	VW3A5403	VW3A53902	1.300/ *2.866*
	VW3A5404	VW3A53903	2.700/ *5.952*
	VW3A5405	VW3A53904	3.200/ *7.055*

(1) The filters are designed to operate in a switching frequency range of between 4 and 8 kHz.
*(2) When used with **ATV650U07N4/N4E...D90N4/N4E** drives, the filter must be mounted in a separate enclosure to maintain IP55 protection for the installation.*
(3) In "Normal Duty", apply a derating of 1 to the drive nominal power with a minimum switching frequency of 4 kHz. For example:
- An ATV630C13N4 drive with sinus filter can be used on a 110 kW motor.
- An ATV630C16N4 drive with sinus filter can be used on a 132 kW motor.

Variable speed drives

Altivar Process ATV600

Option: Output filters

Common mode filters

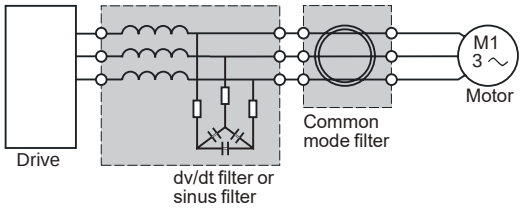

Altivar Process ATV600 drive with common mode filter

Presentation

Sinus filters or dv/dt filters reduce the overvoltage across windings and high frequency currents in differential mode. But they have no effect on the common mode current between phases and the cable shielding, or between the windings and the stator/rotor of the motor.

Common mode filters offer several benefits:

- Reduction of RFI (radio frequency interference) of the motor cable and improvement of the effectiveness of the EMC filter for conducted emissions
- Reduction of the high frequency currents circulating in the motor bearings to help to prevent them from being damaged

It is possible to use the common mode filter at the output terminals of the drive, the dv/dt filter, or the sinus filter.

***Note**: The selection of a common mode configuration depends on the type and length of motor cable. An abnormal increase in temperature indicates a possible saturation. Additional filters should be used to avoid it.*

Common mode filters

Corresponding drive	Maximum length of unshielded cable			
	150 m/ *492 ft*	**300 m/ *984 ft***	**500 m/ *1,640 ft***	**1,000 m/ *3,280 ft***
ATV630U07M3...U40M3	VW3A5501	VW3A5502	2 x VW3A5501	VW3A5501 + VW3A5502
ATV630U55M3	VW3A5501	VW3A5502	VW3A5501 + VW3A5502	2 x VW3A5502
ATV630U75M3...D11M3	VW3A5503	VW3A5504	2 x VW3A5503	VW3A5503 + VW3A5504
ATV630D15M3...D45M3	VW3A5503	VW3A5504	VW3A5503 + VW3A5504	2 x VW3A5504
ATV630D55M3...D75M3	VW3A5505	VW3A5506	2 x VW3A5505	2 x VW3A5506

Variable speed drives

Altivar Process ATV600

Option: Output filters

Common mode filters

PF130952A

VW3A5503

Common mode filters *(continued)*

Corresponding drive	Maximum length of unshielded cable			
	150 m/ *492 ft*	**300 m/ *984 ft***	**500 m/ *1,640 ft***	**1,000 m/ *3,280 ft***
ATV630U07N4...U40N4 ATV650U07N4...U40N4 ATV650U07N4E...U40N4E	VW3A5501	VW3A5502	2 x VW3A5501	VW3A5501 + VW3A5502
ATV630U55N4 ATV650U55N4 ATV650U55N4E	VW3A5501	VW3A5502	VW3A5501 + VW3A5502	VW3A5501 + VW3A5502
ATV630U75N4...D11N4 ATV650U75N4...D11N4 ATV650U75N4E...D11N4E	VW3A5501	VW3A5502	VW3A5501 + VW3A5502	2 x VW3A5502
ATV630D15N4...D22N4 ATV650D15N4...D22N4 ATV650D15N4E...D22N4E	VW3A5503	VW3A5504	2 x VW3A5503	VW3A5503 + VW3A5504
ATV630D30N4...D90N4 ATV650D30N4...D90N4 ATV650D30N4E...D90N4E	VW3A5503	VW3A5504	VW3A5503 + VW3A5504	2 x VW3A5504
ATV630C11N4...C16N4	VW3A5505	VW3A5506	2 x VW3A5505	2 x VW3A5506

Corresponding drive	Maximum length of shielded cable		
	150 m/ *492 ft*	**300 m/ *984 ft***	**500 m/ *1,640 ft***
ATV630U07N4...U40N4 ATV650U07N4...U40N4 ATV650U07N4E...U40N4E	VW3A5501	VW3A5502	2 x VW3A5501
ATV630U55N4 ATV650U55N4 ATV650U55N4E	VW3A5502	2 x VW3A5501	2 x VW3A5502
ATV630U75N4...D11N4 ATV650U75N4...D11N4 ATV650U75N4E...D11N4E	VW3A5502	2 x VW3A5501	2 x VW3A5502
ATV630D15N4...D22N4 ATV650D15N4...D22N4 ATV650D15N4E...D22N4E	VW3A5503	2 x VW3A5503	VW3A5503 + VW3A5504
ATV630D30N4...D90N4 ATV650D30N4...D90N4 ATV650D30N4E...D90N4E	VW3A5504	VW3A5503 + VW3A5504	2 x VW3A5504
ATV630C11N4	VW3A5505	VW3A5506	VW3A5505 + VW3A5506
ATV630C13N4...C16N4	VW3A5506	2 x VW3A5505	2 x VW3A5506

Variable speed drives

Altivar Process ATV600

Motor starters

Supply voltage 200...240 V

Applications

Circuit breaker/contactor/drive combinations help to ensure continuity of service in the installation.
The type of circuit breaker/contactor coordination selected can reduce maintenance costs in the event of a motor short circuit on the drive input by minimizing the time required to make the necessary repairs and the cost of replacement equipment. The suggested combinations provide coordination according to the drive rating.

The drive controls the motor, provides a monitoring function against short circuits between the drive and the motor, and helps protect the motor cable against overloads. Overload monitoring is provided by the drive's motor thermal monitoring function if this has been enabled. Otherwise, an external monitoring device such as a probe or thermal overload relay must be provided.

Selecting short circuit protection devices (fuses or circuit breakers) is key to helping to protect the overall installation against potential damage due to short circuits. It is recommended that you refer to the EcoStruxure™ Motor Control Configurator and Installation Manual for more information.

GV3L40

+

LC1D40A●●

+

ATV630D11M3

IEC standard motor starters

Motor Power (1) kW	HP	Drive Reference	Circuit breaker Reference (2)	Rating A	Irm A	Line contactor Reference (3) (4)
Three-phase supply voltage: 200…240 V 50/60 Hz						
0.75	1	ATV630U07M3	GV2L08	4	51	LC1D09●●
1.5	2	ATV630U15M3	GV2L10	6.3	78	
2.2	3	ATV630U22M3	GV2L14	10	138	
3	–	ATV630U30M3	GV2L16	14	170	LC1D18●●
4	5	ATV630U40M3	GV2L20	18	223	
5.5	7.5	ATV630U55M3	GV2L22	25	327	LC1D25●●
7.5	10	ATV630U75M3	GV2L32	32	448	LC1D40A●●
11	15	ATV630D11M3	GV3L40	40	560	
15	20	ATV630D15M3	GV3L65	65	910	LC1D65A●●
18.5	25	ATV630D18M3	GV4L/LE80●	80	480	LC1D65A●●
22	30	ATV630D22M3				LC1D80●●
30	40	ATV630D30M3	GV4L/LE115●	115	690	LC1D95●●
37	50	ATV630D37M3	NSX160●MA150	150	1350	LC1D115●●
45	60	ATV630D45M3				LC1D150●●
55	75	ATV630D55M3	NSX250●MA220	220	1980	LC1G185●●
75	100	ATV630D75M3	NSX400● Micrologic 1.3-M	320	1600	LC1G265●●

(1) Standard power ratings for 230 V 50/60 Hz 4-pole motors.
The values expressed in HP conform to the NEC (National Electrical Code).
(2) For references to be completed, replace ● with the letter corresponding to the breaking performance of the circuit breaker (F, N, H, S, or L). You can use the EcoStruxure™ Motor Control Configurator tool to support your customization.
Breaking capacity of circuit breakers according to standard IEC 60947-2:

Circuit breaker	Icu (kA) for 200…240 V	B	F	N	H	S	L
GV2L08...L20	>100	–	–	–	–	–	–
GV2L22...L32	50	–	–	–	–	–	–
GV3L40...L65	50	–	–	–	–	–	–
GV4L80/115●	–	50	–	100	–	–	–
GV4LE80/115●	–	50	–	100	–	120	–
NSX160●MA150	–	–	85	90	100	120	150
NSX250●MA220	–	–	85	90	100	120	150
NSX400● Micrologic 1.3-M	–	–	40	85	100	120	150

(3) Composition of contactors:
LC1D09...D150: 3 poles + 1 NO auxiliary contact + 1 NC auxiliary contact
LC1G185...G265: 3 poles
To add auxiliary contacts or other accessories, please refer to the TeSys catalog.
(4) Replace ●● with the control circuit voltage code indicated in the table below:

	Volts ∿	24	48	110	220	230	240
LC1D09...D150	50 Hz	B5	E5	F5	M5	P5	U5
	60 Hz	B6	E6	F6	M6	–	U6
	50/60 Hz	B7	E7	F7	M7	P7	U7
	AC/DC volts	24...48	48...130	100...250		200...500	
LC1G185...G265		BEEA	EHEN	KUEN		LSEA	

For other voltages available between 24 V and 660 V, or a DC control circuit, please consult our Customer Care Teams.

Variable speed drives

Altivar Process ATV600

Motor starters

Supply voltage 380...415 V

GV4LE115

+

LC1D80●●

+

ATV630D45N4

IEC standard motor starters

Motor Power (1) kW	HP	Drive Reference	Circuit breaker Reference (2)	Rating A	Irm A	Line contactor Reference (3) (4)
Three-phase supply voltage: 380…415 V 50/60 Hz						
0.75	1	ATV630U07N4	GV2L07	2.5	33.5	LC1D09●●
1.5	2	ATV630U15N4	GV2L08	4	51	
2.2	3	ATV630U22N4	GV2L10	6.3	78	
3	–	ATV630U30N4	GV2L14	10	138	
4	5	ATV630U40N4				
5.5	7.5	ATV630U55N4	GV2L16	14	170	LC1D18●●
7.5	10	ATV630U75N4	GV2L20	18	223	
11	15	ATV630D11N4	GV2L22	25	327	LC1D25●●
15	20	ATV630D15N4	GV3L32	32	448	
18.5	25	ATV630D18N4	GV3L40	40	560	LC1D40A●●
22	30	ATV630D22N4	GV3L50	50	700	LC1D50A●●
30	40	ATV630D30N4	GV3L65	65	910	
37	50	ATV630D37N4	GV4L/LE80●	80	480	LC1D65A●●
45	60	ATV630D45N4	GV4L/LE115●	115	690	LC1D80●●
55	75	ATV630D55N4				
75	100	ATV630D75N4	NSX160●MA150	150	1350	LC1D115●●
90	125	ATV630D90N4	NSX250●MA220	220	1980	LC1G185●●
110	150	ATV630C11N4				LC1G225●●
132	200	ATV630C13N4	NSX400● Micrologic 1.3-M	320	1600	LC1G265●●
160	250	ATV630C16N4				LC1G330●●
220	350	ATV630C22N4	NSX630● Micrologic 1.3-M	500	3000	LC1G400●●
250	400	ATV630C25N4				LC1G500●●
310	500	ATV630C31N4	NS800L Micrologic 2 or 5	800	1600	LC1G500●●

(1) Standard power ratings for 400 V 50/60 Hz 4-pole motors.
The values expressed in HP conform to the NEC (National Electrical Code).
(2) For references to be completed, replace ● with the letter corresponding to the breaking performance of the circuit breaker (F, N, H, S, or L). You can use the EcoStruxure™ Motor Control Configurator tool to support your customization.
Breaking capacity of circuit breakers according to standard IEC 60947-2:

Circuit breaker	Icu (kA) for 380…415 V	B	F	N	H	S	L
GV2L07...L14	>100	–	–	–	–	–	–
GV2L16 ...L22	50	–	–	–	–	–	–
GV3L32...L65	50	–	–	–	–	–	–
GV4L80/115●	–	25	–	50	–	–	–
GV4LE80/115●	–	25	–	50	–	100	–
NSX160●MA150	–	–	36	50	70	100	150
NSX250●MA220	–	–	36	50	70	100	150
NSX400●, NSX630●	–	–	36	50	70	100	150
NS800L Micrologic 2 or 5	–	–	–	–	–	–	150

(3) Composition of contactors:
LC1D09...D115: 3 poles + 1 NO auxiliary contact + 1 NC auxiliary contact
LC1G185...G500: 3 poles
To add auxiliary contacts or other accessories, please refer to the TeSys catalog.
(4) Replace ●● with the control circuit voltage code indicated in the table below:

	Volts ∿	24	48	110	220	230	240
LC1D09...D115	50 Hz	B5	E5	F5	M5	P5	U5
	60 Hz	B6	E6	F6	M6	–	U6
	50/60 Hz	B7	E7	F7	M7	P7	U7
	AC/DC volts	24...48	48...130	100...250		200...500	
LC1G185...G500		BEEA	EHEN	KUEN		LSEA	

For other voltages available between 24 V and 660 V, or a DC control circuit, please consult our Customer Care Teams.

Variable speed drives

Altivar Process ATV600

Motor starters

Supply voltage 380...415 V

GV4LE115

+

LC1D80●●

+

ATV650D45N4

IEC standard motor starters

Motor Power (1) kW	HP	Drive Reference	Circuit breaker Reference (2)	Rating A	Irm A	Line contactor Reference (3) (4) (5)
Three-phase supply voltage: 380…415 V 50/60 Hz						
0.75	1	**ATV650U07N4/N4E**	**GV2L07**	2.5	33.5	**LC1D09●●**
1.5	2	**ATV650U15N4/N4E**	**GV2L08**	4	51	
2.2	3	**ATV650U22N4/N4E**	**GV2L10**	6.3	78	
3	–	**ATV650U30N4/N4E**	**GV2L14**	10	138	
4	5	**ATV650U40N4/N4E**				
5.5	7.5	**ATV650U55N4/N4E**	**GV2L16**	14	170	**LC1D18●●**
7.5	10	**ATV650U75N4/N4E**	**GV2L20**	18	223	
11	15	**ATV650D11N4/N4E**	**GV2L22**	25	327	**LC1D25●●**
15	20	**ATV650D15N4/N4E**	**GV3L32**	32	448	
18.5	25	**ATV650D18N4/N4E**	**GV3L40**	40	560	**LC1D40A●●**
22	30	**ATV650D22N4/N4E**	**GV3L50**	50	700	**LC1D50A●●**
30	40	**ATV650D30N4/N4E**	**GV3L65**	65	910	
37	50	**ATV650D37N4/N4E**	**GV4L/LE80●**	80	480	**LC1D65A●●**
45	60	**ATV650D45N4/N4E**	**GV4L/LE115●**	115	690	**LC1D80●●**
55	75	**ATV650D55N4/N4E**				
75	100	**ATV650D75N4/N4E**	**NSX160●MA150**	150	1350	**LC1D115●●**
90	125	**ATV650D90N4/N4E**	**NSX250●MA220**	220	1980	**LC1G185●●**

(1) Standard power ratings for 400 V 50/60 Hz 4-pole motors.
The values expressed in HP conform to the NEC (National Electrical Code).
(2) For references to be completed, replace ● with the letter corresponding to the breaking performance of the circuit breaker (F, N, H, S, or L). You can use the EcoStruxure™ Motor Control Configurator tool to support your customization.
Breaking capacity of circuit breakers according to standard IEC 60947-2:

Circuit breaker	Icu (kA) for 380…415 V	B	F	N	H	S	L
GV2L07...L14	>100	–	–	–	–	–	–
GV2L16...L22	50	–	–	–	–	–	–
GV3L32...L65	50	–	–	–	–	–	–
GV4L80/115●	–	25	–	50	–	–	–
GV4LE80/115●	–	25	–	50	–	100	–
NSX160●MA150	–	–	36	50	70	100	150
NSX250●MA220	–	–	36	50	70	100	150

(3) Composition of contactors:
LC1D09...D115: 3 poles + 1 NO auxiliary contact + 1 NC auxiliary contact
LC1G185: 3 poles
To add auxiliary contacts or other accessories, please refer to the TeSys catalog.
(4) Replace ●● with the control circuit voltage code indicated in the table below:

	Volts ∼	24	48	110	220	230	240
LC1D09...D115	50 Hz	**B5**	**E5**	**F5**	**M5**	**P5**	**U5**
	60 Hz	**B6**	**E6**	**F6**	**M6**	**–**	**U6**
	50/60 Hz	**B7**	**E7**	**F7**	**M7**	**P7**	**U7**
	AC/DC volts	**24...48**	**48...130**	**100...250**		**200...500**	
LC1G185		**BEEA**	**EHEN**	**KUEN**		**LSEA**	

For other voltages available between 24 V and 660 V, or a DC control circuit, please consult our Customer Care Teams.

(5) When they are used with ATV650U07N4/N4E...D90N4/N4E drives, the motor starters must be installed in a separate enclosure to maintain the IP55 protection rating of the installation.

Variable speed drives

Altivar Process ATV600

Motor starters

Supply voltage 440 V

GV2L08

+

LC1D09●●

+

ATV630U15N4

IEC standard motor starters

Motor Power (1) kW	HP	Drive Reference	Circuit breaker Reference (2)	Rating A	Irm A	Line contactor Reference (3) (4)
Three-phase supply voltage: 440 V 50/60 Hz						
0.75	1	ATV630U07N4	GV2L07	2.5	33.5	LC1D09●●
1.5	2	ATV630U15N4	GV2L08	4	51	
2.2	3	ATV630U22N4	GV2L10	6.3	78	
3	–	ATV630U30N4				
4	5	ATV630U40N4	GV2L14	10	138	
5.5	7.5	ATV630U55N4	GV2L16	14	170	LC1D18●●
7.5	10	ATV630U75N4				
11	15	ATV630D11N4	GV2L22	25	327	LC1D25●●
15	20	ATV630D15N4	GV3L32	32	448	
18.5	25	ATV630D18N4	GV3L40	40	560	LC1D40A●●
22	30	ATV630D22N4	GV3L50	50	700	LC1D50A●●
30	40	ATV630D30N4	GV3L65	65	910	LC1D50A●●
37	50	ATV630D37N4				LC1D65A●●
45	60	ATV630D45N4	GV4L/LE80●	80	480	LC1D65A●●
55	75	ATV630D55N4	GV4L/LE115●	115	690	LC1D80●●
75	100	ATV630D75N4	NSX160●MA150	150	1350	LC1D115●●
90	125	ATV630D90N4	NSX250●MA220	220	1980	LC1D115●●
110	150	ATV630C11N4				LC1G185●●
132	200	ATV630C13N4				
160	250	ATV630C16N4	NSX400● Micrologic 1.3-M	320	1600	LC1G265●●
220	350	ATV630C22N4	NSX630● Micrologic 1.3-M	500	3000	LC1G400●●
250	400	ATV630C25N4				LC1G500●●
310	500	ATV630C31N4	NS800L Micrologic 2 or 5	800	1600	LC1G630●●

(1) Standard power ratings for 400 V 50/60 Hz 4-pole motors.
The values expressed in HP conform to the NEC (National Electrical Code).
(2) For references to be completed, replace ● with the letter corresponding to the breaking performance of the circuit breaker (F, N, H, S, or L). You can use the EcoStruxure™ Motor Control Configurator tool to support your customization.
Breaking capacity of circuit breakers according to standard IEC 60947-2:

Circuit breaker	Icu (kA) for 440 V	B	F	N	H	S	L
GV2L07...L10	>100	–	–	–	–	–	–
GV2L14...L22	50	–	–	–	–	–	–
GV3L32...L66	50	–	–	–	–	–	–
GV4L80/115●	–	25	–	50	–	–	–
GV4LE80/115●	–	25	–	50	–	70	–
NSX160●MA150	–	–	35	50	65	90	130
NSX250●MA220	–	–	35	50	65	90	130
NSX400●, NSX630●	–	–	30	42	65	90	130
NS800L Micrologic 2 or 5	–	–	–	–	–	–	130

(3) Composition of contactors:
LC1D09...D115: 3 poles + 1 NO auxiliary contact + 1 NC auxiliary contact
To add auxiliary contacts or other accessories, please refer to the TeSys catalog.
(4) Replace ●● with the control circuit voltage code indicated in the table below:

	Volts ∿	24	48	110	220	230	240
LC1D09...D115	50 Hz	B5	E5	F5	M5	P5	U5
	60 Hz	B6	E6	F6	M6	–	U6
	50/60 Hz	B7	E7	F7	M7	P7	U7
	AC/DC volts	24...48	48...130	100...250		200...500	
LC1G185...G500		BEEA	EHEN	KUEN		LSEA	
LC1G630		–	EHEN	KUEN		LSEA	

For other voltages available between 24 V and 660 V, or a DC control circuit, please consult our Customer Care Teams.

Variable speed drives

Altivar Process ATV600

Motor starters

Supply voltage 440 V

NSX250●MA220

+

LC1D115●●

+

ATV650D90N4

IEC standard motor starters

Motor Power (1) kW	HP	Drive Reference	Circuit breaker Reference (2)	Rating A	Irm A	Line contactor Reference (3) (4)
Three-phase supply voltage: 440 V 50/60 Hz						
0.75	1	ATV650U07N4/N4E	GV2L07	2.5	33.5	LC1D09●●
1.5	2	ATV650U15N4/N4E	GV2L08	4	51	
2.2	3	ATV650U22N4/N4E	GV2L10	6.3	78	
3	–	ATV650U30N4/N4E				
4	5	ATV650U40N4/N4E	GV2L14	10	138	
5.5	7.5	ATV650U55N4/N4E	GV2L16	14	170	LC1D18●●
7.5	10	ATV650U75N4/N4E				
11	15	ATV650D11N4/N4E	GV2L22	25	327	LC1D25●●
15	20	ATV650D15N4/N4E	GV3L32	32	448	
18.5	25	ATV650D18N4/N4E	GV3L40	40	560	LC1D40A●●
22	30	ATV650D22N4/N4E	GV3L50	50	700	LC1D50A●●
30	40	ATV650D30N4/N4E	GV3L65	65	910	LC1D50A●●
37	50	ATV650D37N4/N4E				LC1D65A●●
45	60	ATV650D45N4/N4E	GV4L/LE80●	80	480	LC1D65A●●
55	75	ATV650D55N4/N4E	GV4L/LE115●	115	690	LC1D80●●
75	100	ATV650D75N4/N4E	NSX160●MA150	150	1350	LC1D115●●
90	125	ATV650D90N4/N4E	NSX250●MA220	220	1980	

(1) Standard power ratings for 400 V 50/60 Hz 4-pole motors.
The values expressed in HP conform to the NEC (National Electrical Code).
(2) For references to be completed, replace ● with the letter corresponding to the breaking performance of the circuit breaker (F, N, H, S, or L). You can use the EcoStruxure™ Motor Control Configurator tool to support your customization.
Breaking capacity of circuit breakers according to standard IEC 60947-2:

Circuit breaker	Icu (kA) for 440 V	B	F	N	H	S	L
GV2L07...L10	>100	–	–	–	–	–	–
GV2L14...L22	50	–	–	–	–	–	–
GV3L32...L66	50	–	–	–	–	–	–
GV4L80/115●	–	25	–	50	–	–	–
GV4LE80/115●	–	25	–	50	–	70	–
NSX160●MA150	–	–	35	50	65	90	130
NSX250●MA220	–	–	35	50	65	90	130

(3) Composition of contactors:
LC1D09...D115: 3 poles + 1 NO auxiliary contact + 1 NC auxiliary contact
To add auxiliary contacts or other accessories, please refer to the TeSys catalog.

(4) Replace ●● with the control circuit voltage code indicated in the table below:

	Volts ∿	24	48	110	220	230	240
LC1D09...D115	50 Hz	B5	E5	F5	M5	P5	U5
	60 Hz	B6	E6	F6	M6	–	U6
	50/60 Hz	B7	E7	F7	M7	P7	U7

For other voltages available between 24 V and 660 V, or a DC control circuit, please consult our Customer Care Teams.

Variable speed drives

Altivar Process ATV600

Motor starters

Supply voltage 500...690 V

GV2L10

+

LC1D09●●

+

ATV630U22Y6

IEC standard motor starters

Motor Power		Drive Reference	Circuit breaker Reference *(1)*	Rating	Irm	Line contactor Reference
kW	*HP*			A	A	
Three-phase supply voltage: 500 V 50/60 Hz						
1.5	*2*	**ATV630U22Y6**	**GV2L10**	6.3	78	**LC1D09●●**
2.2	*3*	**ATV630U30Y6**				
3	–	**ATV630U40Y6**	**GV2L14**	10	138	**LC1D18●●**
4	*5*	**ATV630U55Y6**				
5.5	*7.5*	**ATV630U75Y6**	**GV2L16**	14	170	**LC1D25●●**
7.5	*10*	**ATV630D11Y6**	**GV2L20**	18	223	
11	*15*	**ATV630D15Y6**	**GV2L22**	25	327	**LC1D40A●●**
15	*20*	**ATV630D18Y6**	**GV3L25**	25	350	
18.5	*25*	**ATV630D22Y6**	**GV3L32**	32	448	
22	*30*	**ATV630D30Y6**	**GV3L40**	40	560	
30	*40*	**ATV630D37Y6**	**GV3L50**	50	700	**LC1D50A●●**
37	*50*	**ATV630D45Y6**	**GV3L65**	65	910	**LC1D65A●●**
45	*60*	**ATV630D55Y6**	**NSX100●MA100**	100	600	**LC1D80●●**
55	*75*	**ATV630D75Y6**				
75	*100*	**ATV630D90Y6**	**NSX160●MA150**	150	1350	**LC1D150●●**
Three-phase supply voltage: 690 V 50/60 Hz						
2.2	*3*	**ATV630U22Y6**	**GV2L08**	4	51	**LC1D09●●**
3	–	**ATV630U30Y6**	**GV2L10**	6.3	78	
4	*5*	**ATV630U40Y6**	**GV2L14**	10	138	**LC1D18●●**
5.5	*7.5*	**ATV630U55Y6**				
7.5	*10*	**ATV630U75Y6**	**GV2L16**	14	170	
11	*15*	**ATV630D11Y6**	**GV2L20**	18	223	
15	*20*	**ATV630D15Y6**	**GV2L22**	25	327	**LC1D25●●**
18.5	*25*	**ATV630D18Y6**	**GV3L25**	25	350	**LC1D40A●●**
22	*30*	**ATV630D22Y6**	**GV3L32**	32	416	
30	*40*	**ATV630D30Y6**	**GV3L40**	40	560	
37	*50*	**ATV630D37Y6**	**GV3L50**	50	700	**LC1D50A●●**
45	*60*	**ATV630D45Y6**	**GV3L65**	65	910	**LC1D65A●●**
55	*75*	**ATV630D55Y6**	**NSX100●MA100**	100	600	**LC1D80●●**
75	*100*	**ATV630D90Y6**				
90	*125*	**ATV630D90Y6**	**NSX250●MA150**	150	1350	**LC1D150●●**

(1) For references to be completed, replace ● with the letter corresponding to the breaking performance of the circuit breaker (H, HB1, or HB2). Breaking capacity of circuit breakers according to standard IEC 609472:

Circuit breaker	Supply voltage (V)	Icu (kA)			
			H	HB1	HB2
GV2L07...L10	500	>100	–	–	–
	690	4	–	–	–
GV2L14...L22	500	10	–	–	–
	690	4	–	–	–
GV2L25...L32	500	12	–	–	–
	690	4	–	–	–
GV3L40...L66	500	12	–	–	–
	690	5	–	–	–
NSX100●MA100	500	–	50	85	100
	690	–	–	75	100
NSX160●MA150	500	–	50	–	–
NSX250●MA220	690	–	–	75	100

Variable speed drives

Altivar Process ATV600

IP21 drives: 200...240 V, 380...480 V

200...240 V IP21/UL Type 1 drives		
Overall dimensions		
Reference	**W x H x D**	
	mm	***in.***
ATV630U07M3	144 x 350 x 203	*5.67 x 13.78 x 7.99*
ATV630U15M3	144 x 350 x 203	*5.67 x 13.78 x 7.99*
ATV630U22M3	144 x 350 x 203	*5.67 x 13.78 x 7.99*
ATV630U30M3	144 x 350 x 203	*5.67 x 13.78 x 7.99*
ATV630U40M3	144 x 350 x 203	*5.67 x 13.78 x 7.99*
ATV630U55M3	171 x 409 x 233	*6.73 x 16.10 x 9.17*
ATV630U75M3	211 x 546 x 232	*8.31 x 21.50 x 9.13*
ATV630D11M3	211 x 546 x 232	*8.31 x 21.50 x 9.13*
ATV630D15M3	226 x 673 x 271	*8.90 x 26.50 x 10.67*
ATV630D18M3	226 x 673 x 271	*8.90 x 26.50 x 10.67*
ATV630D22M3	226 x 673 x 271	*8.90 x 26.50 x 10.67*
ATV630D30M3	290 x 922 x 323	*11.42 x 36.30 x 12.72*
ATV630D37M3	290 x 922 x 323	*11.42 x 36.30 x 12.72*
ATV630D45M3	290 x 922 x 323	*11.42 x 36.30 x 12.72*
ATV630D55M3	320 x 852 x 390	*12.60 x 33.54 x 15.35*
With IP21/UL Type 1 conformity kit	320 x 1,160 x 390	*12.60 x 45.67 x 15.35*
ATV630D75M3	320 x 852 x 390	*12.60 x 33.54 x 15.35*
With IP21/UL Type 1 conformity kit	320 x 1,160 x 390	*12.60 x 45.67 x 15.35*

380...480 V IP21/UL Type 1 and cabinet integration drives		
Overall dimensions		
Reference	**W x H x D**	
	mm	***in.***
ATV630U07N4	144 x 350 x 203	*5.67 x 13.78 x 7.99*
ATV630U07N4Z	130 x 285 x 196	*5.11 x 11.22 x 7.71*
ATV630U15N4	144 x 350 x 203	*5.67 x 13.78 x 7.99*
ATV630U15N4Z	130 x 285 x 196	*5.11 x 11.22 x 7.71*
ATV630U22N4	144 x 350 x 203	*5.67 x 13.78 x 7.99*
ATV630U22N4Z	130 x 285 x 196	*5.11 x 11.22 x 7.71*
ATV630U30N4	144 x 350 x 203	*5.67 x 13.78 x 7.99*
ATV630U30N4Z	130 x 285 x 196	*5.11 x 11.22 x 7.71*
ATV630U40N4	144 x 350 x 203	*5.67 x 13.78 x 7.99*
ATV630U40N4Z	130 x 285 x 196	*5.11 x 11.22 x 7.71*
ATV630U55N4	144 x 350 x 203	*5.67 x 13.78 x 7.99*
ATV630U55N4Z	130 x 285 x 196	*5.11 x 11.22 x 7.71*
ATV630U75N4	171 x 409 x 233	*6.73 x 16.10 x 9.17*
ATV630U75N4Z	155 x 345 x 225	*6.10 x 13.58 x 8.85*
ATV630D11N4	171 x 409 x 233	*6.73 x 16.10 x 9.17*
ATV630D11N4Z	155 x 345 x 225	*6.10 x 13.58 x 8.85*
ATV630D15N4	211 x 546 x 232	*8.31 x 21.50 x 9.13*
ATV630D15N4Z	195 x 480 x 225.5	*7.67 x 18.89 x 8.87*
ATV630D18N4	211 x 546 x 232	*8.31 x 21.50 x 9.13*
ATV630D18N4Z	195 x 480 x 225.5	*7.67 x 18.89 x 8.87*
ATV630D22N4	211 x 546 x 232	*8.31 x 21.50 x 9.13*
ATV630D22N4Z	195 x 480 x 225.5	*7.67 x 18.89 x 8.87*
ATV630D30N4	226 x 673 x 271	*8.90 x 26.50 x 10.67*
ATV630D30N4Z	210 x 597 x 262	*8.26 x 23.50 x 10.31*
ATV630D37N4	226 x 673 x 271	*8.90 x 26.50 x 10.67*
ATV630D37N4Z	210 x 597 x 262	*8.26 x 23.50 x 10.31*
ATV630D45N4	226 x 673 x 271	*8.90 x 26.50 x 10.67*
ATV630D45N4Z	210 x 597 x 262	*8.26 x 23.50 x 10.31*
ATV630D55N4	290 x 922 x 323	*11.42 x 36.30 x 12.72*
ATV630D55N4Z	265 x 748 x 307	*10.43 x 29.44 x 12.08*
ATV630D75N4	290 x 922 x 323	*11.42 x 36.30 x 12.72*
ATV630D75N4Z	265 x 748 x 307	*10.43 x 29.44 x 12.08*
ATV630D90N4	290 x 922 x 323	*11.42 x 36.30 x 12.72*
ATV630D90N4Z	265 x 748 x 307	*10.43 x 29.44 x 12.08*

Variable speed drives

Altivar Process ATV600
IP21 drives: 380...480 V
IP00 drives: 500...690 V

380...480 V IP21/UL Type 1 and cabinet integration drives (continued)

Overall dimensions

Reference	W x H x D	
	mm	*in.*
ATV630C11N4	320 x 852 x 390	*12.60 x 33.54 x 15.35*
With IP21/UL Type 1 conformity kit	320 x 1,157 x 390	*12.60 x 45.55 x 15.35*
ATV630C13N4	320 x 852 x 390	*12.60 x 33.54 x 15.35*
With IP21/UL Type 1 conformity kit	320 x 1,160 x 390	*12.60 x 45.67 x 15.35*
ATV630C16N4	320 x 852 x 390	*12.60 x 33.54 x 15.35*
With IP21/UL Type 1 conformity kit	320 x 1,160 x 390	*12.60 x 45.67 x 15.35*
ATV630C22N4	440 x 1,190 x 377	*17.32 x 46.85 x 14.84*
With IP21/UL Type 1 conformity kit	440 x 1,498 x 377	*17.32 x 58.98 x 14.84*
ATV630C25N4	598 x 1,190 x 377	*23.43 x 46.85 x 14.84*
With IP21/UL Type 1 conformity kit	598 x 1,498 x 377	*23.43 x 58.98 x 14.84*
ATV630C31N4	598 x 1,190 x 377	*23.43 x 46.85 x 14.84*
With IP21/UL Type 1 conformity kit	598 x 1,498 x 377	*23.43 x 58.98 x 14.84*

ATV630-650_62317_CPSCT17002B

500...690 V IP00 drives *(1)*

Overall dimensions

Reference	W x H x D	
	mm	*in.*
ATV630U22Y6	246 x 420 x 242	*9.68 x 16.5 x 9.52*
With IP20/UL Type 1 conformity kit	246 x 567 x 242	*9.68 x 22.32 x 9.52*
ATV630U30Y6	246 x 420 x 242	*9.68 x 16.5 x 9.52*
With IP20/UL Type 1 conformity kit	246 x 567 x 242	*9.68 x 22.32 x 9.52*
ATV630U40Y6	246 x 420 x 242	*9.68 x 16.5 x 9.52*
With IP20/UL Type 1 conformity kit	246 x 567 x 242	*9.68 x 22.32 x 9.52*
ATV630U55Y6	246 x 420 x 242	*9.68 x 16.5 x 9.52*
With IP20/UL Type 1 conformity kit	246 x 567 x 242	*9.68 x 22.32 x 9.52*
ATV630U75Y6	246 x 420 x 242	*9.68 x 16.5 x 9.52*
With IP20/UL Type 1 conformity kit	246 x 567 x 242	*9.68 x 22.32 x 9.52*
ATV630D11Y6	246 x 420 x 242	*9.68 x 16.5 x 9.52*
With IP20/UL Type 1 conformity kit	246 x 567 x 242	*9.68 x 22.32 x 9.52*
ATV630D15Y6	246 x 420 x 242	*9.68 x 16.5 x 9.52*
With IP20/UL Type 1 conformity kit	246 x 567 x 242	*9.68 x 22.32 x 9.52*
ATV630D18Y6	246 x 420 x 242	*9.68 x 16.5 x 9.52*
With IP20/UL Type 1 conformity kit	246 x 567 x 242	*9.68 x 22.32 x 9.52*
ATV630D22Y6	246 x 420 x 242	*9.68 x 16.5 x 9.52*
With IP21/UL Type 1 conformity kit	246 x 567 x 242	*9.68 x 22.32 x 9.52*
ATV630D30Y6	246 x 420 x 242	*9.68 x 16.5 x 9.52*
With IP20/UL Type 1 conformity kit	246 x 567 x 242	*9.68 x 22.32 x 9.52*
ATV630D37Y6	331 x 630 x 297	*13.03 x 24.80 x 11.69*
With IP20/UL Type 1 conformity kit	331 x 822 x 297	*13.03 x 32.36 x 11.69*
ATV630D45Y6	331 x 630 x 297	*13.03 x 24.80 x 11.69*
With IP20/UL Type 1 conformity kit	331 x 822 x 297	*13.03 x 32.36 x 11.69*
ATV630D55Y6	331 x 630 x 297	*13.03 x 24.80 x 11.69*
With IP20/UL Type 1 conformity kit	331 x 822 x 297	*13.03 x 32.36 x 11.69*
ATV630D75Y6	331 x 630 x 297	*13.03 x 24.80 x 11.69*
With IP20/UL Type 1 conformity kit	331 x 822 x 297	*13.03 x 32.36 x 11.69*
ATV630D90Y6	331 x 630 x 297	*13.03 x 24.80 x 11.69*
With IP20/UL Type 1 conformity kit	331 x 822 x 297	*13.03 x 32.36 x 11.69*

1) Product supplied as IP00 for mounting in an enclosure. For IP20/UL Type1 wall mounting, an adaptation kit should be ordered separately (see page 60822/13).

ATV630-650_62317_CPSCT17004B

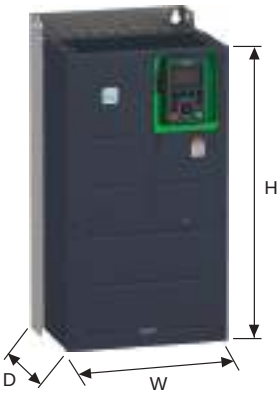

Variable speed drives

Altivar Process ATV600

IP55 drives: 380...480 V

PF130857

PF130884

380…480 V IP55 drives		
Overall dimensions		
Reference	**W x H x D**	
	mm	***in.***
ATV650U07N4	264 x 678 x 272	*10.39 x 26.69 x 10.71*
ATV650U15N4	264 x 678 x 272	*10.39 x 26.69 x 10.71*
ATV650U22N4	264 x 678 x 272	*10.39 x 26.69 x 10.71*
ATV650U30N4	264 x 678 x 272	*10.39 x 26.69 x 10.71*
ATV650U40N4	264 x 678 x 272	*10.39 x 26.69 x 10.71*
ATV650U55N4	264 x 678 x 272	*10.39 x 26.69 x 10.71*
ATV650U75N4	264 x 678 x 299	*10.39 x 26.69 x 11.77*
ATV650D11N4	264 x 678 x 299	*10.39 x 26.69 x 11.77*
ATV650D15N4	264 x 678 x 299	*10.39 x 26.69 x 11.77*
ATV650D18N4	264 x 678 x 299	*10.39 x 26.69 x 11.77*
ATV650D22N4	264 x 678 x 299	*10.39 x 26.69 x 11.77*
ATV650D30N4	290 x 910 x 340	*11.42 x 35.83 x 13.39*
ATV650D37N4	290 x 910 x 340	*11.42 x 35.83 x 13.39*
ATV650D45N4	290 x 910 x 340	*11.42 x 35.83 x 13.39*
ATV650D55N4	345 x 1,250 x 375	*13.58 x 49.21 x 14.76*
ATV650D75N4	345 x 1,250 x 375	*13.58 x 49.21 x 14.76*
ATV650D90N4	345 x 1,250 x 375	*13.58 x 49.21 x 14.76*

380...480 V IP55 drives with Vario disconnect switch		
Reference	**W x H x D** *(1)*	
	mm	***in.***
Overall dimensions		
ATV650U07N4E	264 x 678 x 300	*10.39 x 26.69 x 11.81*
ATV650U15N4E	264 x 678 x 300	*10.39 x 26.69 x 11.81*
ATV650U22N4E	264 x 678 x 300	*10.39 x 26.69 x 11.81*
ATV650U30N4E	264 x 678 x 300	*10.39 x 26.69 x 11.81*
ATV650U40N4E	264 x 678 x 300	*10.39 x 26.69 x 11.81*
ATV650U55N4E	264 x 678 x 300	*10.39 x 26.69 x 11.81*
ATV650U75N4E	264 x 678 x 330	*10.39 x 26.69 x 12.99*
ATV650D11N4E	264 x 678 x 330	*10.39 x 26.69 x 12.99*
ATV650D15N4E	264 x 678 x 330	*10.39 x 26.69 x 12.99*
ATV650D18N4E	264 x 678 x 330	*10.39 x 26.69 x 12.99*
ATV650D22N4E	264 x 678 x 330	*10.39 x 26.69 x 12.99*
ATV650D30N4E	290 x 910 x 401	*11.42 x 35.83 x 15.79*
ATV650D37N4E	290 x 910 x 401	*11.42 x 35.83 x 15.79*
ATV650D45N4E	290 x 910 x 401	*11.42 x 35.83 x 15.79*
ATV650D55N4E	345 x 1,250 x 436	*13.58 x 49.21 x 17.17*
ATV650D75N4E	345 x 1,250 x 436	*13.58 x 49.21 x 17.17*
ATV650D90N4E	345 x 1,250 x 436	*13.58 x 49.21 x 17.17*

(1) Add 60 mm/2.36 in. to the total depth to include the switch handle.

Variable speed drives

Altivar Process ATV600

IP21 and IP54 drives: 380...440 V

Floor-standing 380...440 V IP21 drives

Overall dimensions

Reference	W x H x D *(1)*	
	mm	***in.***
ATV630C11N4F	400 x 2,150 x 605	*15.75 x 84.65 x 23.82*
ATV630C13N4F	400 x 2,150 x 605	*15.75 x 84.65 x 23.82*
ATV630C16N4F	400 x 2,150 x 605	*15.75 x 84.65 x 23.82*
ATV630C20N4F	600 x 2,150 x 605	*23.62 x 84.65 x 23.82*
ATV630C25N4F	600 x 2,150 x 605	*23.62 x 84.65 x 23.82*
ATV630C31N4F	600 x 2,150 x 605	*23.62 x 84.65 x 23.82*

Floor-standing 380...440 V IP54 drives

Overall dimensions

Reference	W x H x D *(2)*	
	mm	***in.***
ATV650C11N4F	400 x 2,350 x 605	*15.75 x 92.52 x 23.82*
ATV650C13N4F	400 x 2,350 x 605	*15.75 x 92.52 x 23.82*
ATV650C16N4F	400 x 2,350 x 605	*15.75 x 92.52 x 23.82*
ATV650C20N4F	600 x 2,350 x 605	*23.62 x 92.52 x 23.82*
ATV650C25N4F	600 x 2,350 x 605	*23.62 x 92.52 x 23.82*
ATV650C31N4F	600 x 2,350 x 605	*23.62 x 92.52 x 23.82*

(1) Add 42 mm/1.65 in. to the total depth in order to include the door handle.
(2) Add 60 mm/2.36 in. to the total depth in order to include the door handle. The total height includes a plinth of 200 mm/7.87 in.

Variable speed drives

Altivar Process ATV600

Options: Passive filters 400V

Passive filters: 400 V 50 Hz three-phase supply		
Overall dimensions		
Reference	W x H x D	
	mm	in.
VW3A46101	190 x 332.11 x 205.5	7.48 x 13.08 x 8.09
VW3A46102	190 x 332.11 x 205.5	7.48 x 13.08 x 8.09
VW3A46103	190 x 332.11 x 205.5	7.48 x 13.08 x 8.09
VW3A46104	232 x 436.11 x 247.5	9.13 x 17.17 x 9.74
VW3A46105	232 x 436.11 x 247.5	9.13 x 17.17 x 9.74
VW3A46106	378 x 594.08 x 242	14.88 x 23.39 x 9.53
VW3A46107	378 x 594.08 x 242	14.88 x 23.39 x 9.53
VW3A46108	378 x 623.6 x 333	14.88 x 24.55 x 13.11
VW3A46109	378 x 623.6 x 333	14.88 x 24.55 x 13.11
VW3A46110	418 x 736.8 x 333	16.46 x 29.01 x 13.11
VW3A46111	418 x 736.8 x 333	16.46 x 29.01 x 13.11
VW3A46112	418 x 767.6 x 400	16.46 x 30.22 x 15.75
VW3A46113	418 x 767.6 x 400	16.46 x 30.22 x 15.75
VW3A46114	468 x 900.06 x 448.5	18.42 x 35.43 x 17.66
VW3A46115	468 x 900.06 x 448.5	18.42 x 35.43 x 17.66
VW3A46116	468 x 900.06 x 448.5	18.42 x 35.43 x 17.66
VW3A46118	468 x 900.06 x 448.5	18.42 x 35.43 x 17.66
VW3A46119	468 x 900.06 x 510	18.42 x 35.43 x 20.00
VW3A46120	190 x 332.11 x 205.5	7.48 x 13.08 x 8.09
VW3A46121	190 x 332.11 x 205.5	7.48 x 13.08 x 8.09
VW3A46122	190 x 332.11 x 205.5	7.48 x 13.08 x 8.09
VW3A46123	232 x 436.11 x 247.5	9.13 x 17.17 x 9.74
VW3A46124	232 x 436.11 x 247.5	9.13 x 17.17 x 9.74
VW3A46125	378 x 594.08 x 242	14.88 x 23.39 x 9.53
VW3A46126	378 x 594.08 x 242	14.88 x 23.39 x 9.53
VW3A46127	378 x 623.6 x 333	14.88 x 24.55 x 13.11
VW3A46128	378 x 623.6 x 333	14.88 x 24.55 x 13.11
VW3A46129	418 x 736.8 x 333	16.46 x 29.01 x 13.11
VW3A46130	418 x 736.8 x 333	16.46 x 29.01 x 13.11
VW3A46131	418 x 767.6 x 400	16.46 x 30.22 x 15.75
VW3A46132	418 x 767.6 x 400	16.46 x 30.22 x 15.75
VW3A46133	468 x 900.06 x 448.5	18.42 x 35.43 x 17.66
VW3A46134	468 x 900.06 x 448.5	18.42 x 35.43 x 17.66
VW3A46135	468 x 900.06 x 510	18.42 x 35.43 x 20.00
VW3A46137	468 x 900.06 x 510	18.42 x 35.43 x 20.00
VW3A46138	468 x 900.06 x 510	18.42 x 35.43 x 20.00

Variable speed drives

Altivar Process ATV600

Options: Passive filters 460V

PF140347

Passive filters: 460 V 60 Hz three-phase supply		
Overall dimensions		
Reference	**W x H x D**	
	mm	***in.***
VW3A46139	190 x 332.11 x 205.5	*7.48 x 13.08 x 8.09*
VW3A46140	190 x 332.11 x 205.5	*7.48 x 13.08 x 8.09*
VW3A46141	190 x 332.11 x 205.5	*7.48 x 13.08 x 8.09*
VW3A46142	232 x 436.11 x 247.5	*9.13 x 17.17 x 9.74*
VW3A46143	232 x 436.11 x 247.5	*9.13 x 17.17 x 9.74*
VW3A46144	378 x 594.08 x 242	*14.88 x 23.39 x 9.53*
VW3A46145	378 x 594.08 x 242	*14.88 x 23.39 x 9.53*
VW3A46146	378 x 594.08 x 242	*14.88 x 23.39 x 9.53*
VW3A46147	378 x 623.6 x 333	*14.88 x 24.55 x 13.11*
VW3A46148	378 x 623.6 x 333	*14.88 x 24.55 x 13.11*
VW3A46149	418 x 736.8 x 333	*16.46 x 29.01 x 13.11*
VW3A46150	418 x 736.8 x 333	*16.46 x 29.01 x 13.11*
VW3A46151	418 x 767.6 x 400	*16.46 x 30.22 x 15.75*
VW3A46152	418 x 767.6 x 400	*16.46 x 30.22 x 15.75*
VW3A46153	468 x 900.06 x 448.5	*18.42 x 35.43 x 17.66*
VW3A46154	468 x 900.06 x 448.5	*18.42 x 35.43 x 17.66*
VW3A46155	468 x 900.06 x 448.5	*18.42 x 35.43 x 17.66*
VW3A46157	468 x 900.06 x 510	*18.42 x 35.43 x 20.00*
VW3A46158	190 x 332.11 x 205.5	*7.48 x 13.08 x 8.09*
VW3A46159	190 x 332.11 x 205.5	*7.48 x 13.08 x 8.09*
VW3A46160	190 x 332.11 x 205.5	*7.48 x 13.08 x 8.09*
VW3A46161	232 x 436.11 x 247.5	*9.13 x 17.17 x 9.74*
VW3A46162	232 x 436.11 x 247.5	*9.13 x 17.17 x 9.74*
VW3A46163	378 x 594.08 x 242	*14.88 x 23.39 x 9.53*
VW3A46164	378 x 594.08 x 242	*14.88 x 23.39 x 9.53*
VW3A46165	378 x 594.08 x 242	*14.88 x 23.39 x 9.53*
VW3A46166	378 x 623.6 x 333	*14.88 x 24.55 x 13.11*
VW3A46167	378 x 623.6 x 333	*14.88 x 24.55 x 13.11*
VW3A46168	418 x 736.8 x 333	*16.46 x 29.01 x 13.11*
VW3A46169	418 x 736.8 x 333	*16.46 x 29.01 x 13.11*
VW3A46170	418 x 767.6 x 400	*16.46 x 30.22 x 15.75*
VW3A46171	418 x 767.6 x 400	*16.46 x 30.22 x 17.75*
VW3A46172	468 x 900.06 x 448.5	*18.42 x 35.43 x 17.66*
VW3A46173	468 x 900.06 x 510	*18.42 x 35.43 x 20.00*
VW3A46174	468 x 900.06 x 510	*18.42 x 35.43 x 20.00*
VW3A46176	468 x 900.06 x 510	*18.42 x 35.43 x 20.00*

Variable speed drives

Altivar Process ATV600

Options: EMC filters, dv/dt filters

PF130924

Additional EMC input filters

Overall dimensions

Reference	W x H x D	
	mm	*in.*
VW3A4701	75 x 220 x 130	*2.95 x 8.66 x 5.12*
With IP21/UL Type 1 conformity kit	77 x 220 x 130	*3.03 x 8.66 x 5.12*
VW3A4702	75 x 240 x 140	*2.95 x 9.45 x 5.51*
With IP21/UL Type 1 conformity kit	77 x 240 x 140	*3.03 x 9.45 x 5.12*
VW3A4703	80 x 302 x 155	*3.15 x 11.89 x 6.10*
With IP21/UL Type 1 conformity kit	83 x 302 x 155	*3.27 x 11.89 x 6.10*
VW3A4704	90 x 283 x 165	*3.54 x 11.14 x 6.50*
With IP21/UL Type 1 conformity kit	93 x 283 x 165	*3.66 x 11.14 x 6.50*
VW3A4705	100 x 328 x 175	*3.94 x 12.91 x 6.89*
With IP21/UL Type 1 conformity kit	103 x 328 x 175	*4.05 x 12.91 x 6.89*
VW3A4706	120 x 340 x 180	*4.72 x 13.39 x 7.09*
With IP21/UL Type 1 conformity kit	123 x 340 x 180	*4.84 x 13.39 x 7.09*
VW3A4707	130 x 395 x 240	*5.12 x 15.55 x 9.45*
With IP21/UL Type 1 conformity kit	134 x 395 x 240	*5.28 x 15.55 x 9.45*
VW3A4708	200 x 445 x 320	*7.87 x 17.52 x 12.60*
With IP21/UL Type 1 conformity kit	204 x 445 x 320	*8.03 x 17.52 x 12.60*
VW3A4709	260 x 520 x 117	*10.24 x 20.47 x 4.61*
VW3A4710	260 x 520 x 117	*10.24 x 20.47 x 4.61*
VW3A4411	800 x 261 x 139	*31.49 x 10.27 x 5.47*

IOP121624

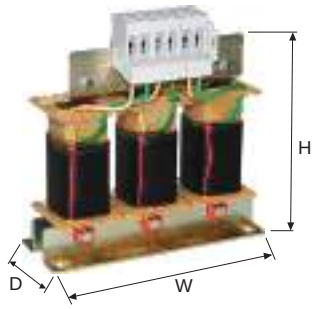

dv/dt filters

Overall dimensions

Reference	W x H x D	
	mm	*in.*
VW3A5103	234 x 226 x 126	*9.21 x 9.21 x 4.96*
VW3A5104	170 x 250 x 100	*6.69 x 9.84 x 3.94*
VW3A5106	245 x 250 x 200	*9.65 x 9.84 x 7.87*
VW3A5107	320 x 250 x 220	*12.60 x 9.84 x 8.66*
VW3A5301	285 x 520 x 215	*11.22 x 20.47 x 8.46*
With IP21/UL Type 1 conformity kit	285 x 530 x 215	*11.22 x 20.87 x 8.46*
VW3A5302	285 x 520 x 215	*11.22 x 20.47 x 8.46*
With IP21/UL Type 1 conformity kit	285 x 530 x 215	*11.22 x 20.87 x 8.46*
VW3A5303	285 x 520 x 215	*11.22 x 20.47 x 8.46*
With IP21/UL Type 1 conformity kit	285 x 530 x 215	*11.22 x 20.87 x 8.46*
VW3A5304	300 x 545 x 245	*11.81 x 21.46 x 9.65*
With IP21/UL Type 1 conformity kit	300 x 560 x 245	*11.81 x 22.05 x 9.65*
VW3A5305	300 x 590 x 245	*11.81 x 23.23 x 9.65*
With IP21/UL Type 1 conformity kit	300 x 610 x 245	*11.81 x 24.02 x 9.65*
VW3A5306	380 x 235 x 325	*14.96 x 9.25 x 12.80*
VW3A5307	420 x 270 x 350	*16.54 x 10.63 x 13.78*

Variable speed drives

Altivar Process ATV600

Options: AC chokes, sinus filters, and common mode filters

2

PF142110

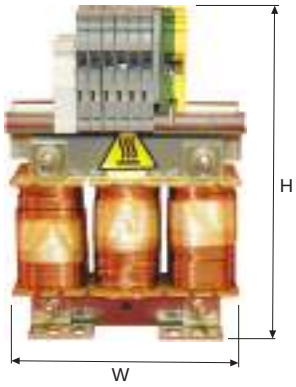

F19_FILT_CPSCT17002

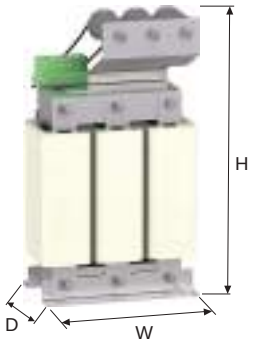

PF130950

AC chokes

Overall dimensions

Reference	W x H x D	
	mm	*in.*
VW3A4551	100 x 35 x 60	*3.93 x 1.37 x 2.36*
VW3A4552	130 x 55 x 90	*5.11 x 2.16 x 3.54*
VW3A4553	130 x 55 x 90	*5.11 x 2.16 x 3.54*
VW3A4554	155 x 170 x 135	*6.10 x 6.69 x 5.31*
VW3A4555	180 x 210 x 165	*7.08 x 8.26 x 6.49*
VW3A4556	270 x 210 x 180	*10.62 x 8.26 x 7.08*

Sinus filters

Overall dimensions

Reference	W x H x D	
	mm	*in.*
VW3A5401	210 x 455 x 210	*8.27 x 17.91 x 8.27*
VW3A5402	210 x 455 x 210	*8.27 x 17.91 x 8.27*
VW3A5403	280 x 520 x 215	*11.02 x 20.47 x 8.46*
VW3A5404	300 x 545 x 245	*11.81 x 21.46 x 9.64*
VW3A5405	375 x 740 x 280	*14.76 x 29.13 x 11.02*
VW3A5406	430 x 350 x 495	*16.93 x 13.78 x 19.49*
VW3A5407	460 x 370 x 565	*18.11 x 14.57 x 22.24*
VW3A5209	480 x 340 x 600	*18.90 x 13.38 x 23.62*
VW3A5210	480 x 370 x 710	*18.90 x 14.57 x 27.95*
VW3A5215	246 x 420 x 242	*9.68 x 16.53 x 9.52*
VW3A5216	171 x 409 x 233	*6.73 x 16.10 x 9.17*
VW3A5217	331 x 822 x 297	*13.03 x 32.36 x 11.69*
VW3A5218	331 x 822 x 297	*13.03 x 32.36 x 11.69*
VW3A5219	331 x 822 x 297	*13.03 x 32.36 x 11.69*

Common mode filters

Overall dimensions

Reference	W x H x D	
	mm	*in.*
VW3A5501	66 x 119.2 x 66	*2.60 x 4.69 x 2.60*
VW3A5502	66 x 163.8 x 66	*2.60 x 4.69 x 2.60*
VW3A5503	127.5 x 161 x 127.5	*5.02 x 6.34 x 5.02*
VW3A5504	127.5 x 210 x 127.5	*5.02 x 8.27 x 5.02*
VW3A5505	191 x 197 x 196	*7.52 x 7.76 x 7.72*
VW3A5506	191 x 256 x 196	*7.52 x 10.08 x 7.72*

Contents

3 - Drives for integration

- **Presentation** ..... page 3/2
- **Drive products for integration 380...480 V** ..... page 3/6
- **Modular drives, based on APM (Altivar Process Modular)** ..... page 3/8
  - 400 V 50/60 Hz supply, Standard ..... page 3/8
  - 440 V 50/60 Hz supply, Standard ..... page 3/9
  - 480 V 50/60 Hz supply, Standard ..... page 3/10
  - 500 V 50/60 Hz supply, Standard ..... page 3/11
  - 600 V 50/60 Hz supply, Standard ..... page 3/12
  - 690 V 50/60 Hz supply, Standard ..... page 3/13
  - 400 V 50/60 Hz supply, Low Harmonic ..... page 3/14
  - 440 V 50/60 Hz supply, Low Harmonic ..... page 3/15
  - 480 V 50/60 Hz supply, Low Harmonic ..... page 3/16
  - 500 V 50/60 Hz supply, Low Harmonic ..... page 3/17
  - 600 V 50/60 Hz supply, Low Harmonic ..... page 3/18
  - 690 V 50/60 Hz supply, Low Harmonic ..... page 3/19
- **Modular drives, based on APM-L (Altivar Process Modular Liquid-cooled)** ..... page 3/20
  - 400 V 50/60 Hz supply ..... page 3/20
  - 440 V 50/60 Hz supply ..... page 3/21
  - 480 V 50/60 Hz supply ..... page 3/22
  - 500 V 50/60 Hz supply ..... page 3/23
  - 600 V 50/60 Hz supply ..... page 3/24
  - 690 V 50/60 Hz supply ..... page 3/25

Variable speed drives
Altivar Process ATV600
Drives for integration

Altivar Process Modular Standard

Altivar Process Modular Standard Reduced Height

Altivar Process Modular Low Harmonic/Regen

General presentation of the offer

Altivar Process drives for cabinet integration is a cost-effective solution for installation in cabinets and separate enclosures thanks to their compact and robust design. These drive variants simplify cabinet design and allow quick installation and commissioning. Altivar Process also offers a range of low harmonic drives.

Altivar Process Modular concept

Altivar Process Modular is ready to build into cabinets to create high-power drive solutions with minimum dimensions that withstand harsh environments.

A powerful drives range from 75 kW/*125 HP* up to 1800 kW/*2000 HP* at 400 V supply voltage and up to 2600 kW/*2600 HP* at 690 V supply voltage can be created by combining sub-assemblies and accessories such as power modules, control units, options, and mechanical accessories.
Altivar Process Modular Liquid-cooled modules allow installation in cabinets up to IP66 protection for harsh environmental conditions.

Altivar Process Modular brings a new approach where sub-assemblies are used to build drives locally:
- A power module section to be combined in different drive architectures
- Control units that make the family differentiation of the power architecture between ATV600 and ATV900 drives
- Optional kits and accessories for easy enclosure integration

Optimized cabinet design

The Altivar Process Modular drives offer has been developed to reduce the engineering time required to design cabinet-mounted drives solutions, consequently decreasing the time to market and the cost of the solution.

Altivar Process Modular brings flexible solutions for special integration constraints with IP21/IP54 protection and robust design with two offers:
- Standard: integration in 2 m/*6.56 ft* height and 600 mm/*23.62 in.* depth cabinets
- Reduced Height: integration in 1.6 m/*5.25 ft* height and 600 mm/*23.62 in.* depth cabinets

Altivar Process Modular Liquid-cooled modules allow installation in cabinets up to IP66 protection for harsh environmental conditions.

These power-intensive drives offers integrate:
- Drive power and control modules
- Line chokes to limit THDi levels for Standard version and less than 3% THDi for Low Harmonic version
- A filter to help protect the motor against the effects of dv/dt
- Accessible terminals to simplify the motor wiring and power wiring

IP21 (UL Type 1) integration creates a common cooling air flow for the power and control sections.

The IP54 (UL Type 12) mechanical option introduces a system for separating the cooling air flow between the power and control sections, allowing operation in a highly polluted environment as well as optimum management of thermal stress in the plant room. Both designs allow a maximum incoming air temperature of 50 °C/*122 °F* with derating (class 3K3 according to IEC/EN 60721-3-3).

Variable speed drives
Altivar Process ATV600
Drives for integration

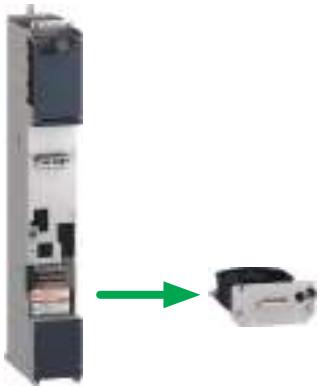

Power module and power fan inside drawer

Product features

The Altivar Process Modular drives offer has been developed to meet the requirements of some of the most demanding applications and enclosure requirements and the most recent standards and regulations.

Compliance with electromagnetic compatibility requirements has been incorporated into the design of the modular process drives, which simplifies installation and provides an economical means of helping to ensure equipment meets marking requirements.

- Altivar Process Modular drives have category C3 EMC filters and highly efficient integrated motor filters for dv/dt and common mode reduction and voltage peak limitation that allow 300 m/*980 ft* of shielded motor cables (category C3 environment) and 500 m/*1,640 ft* of unshielded motor cables (category C4 enviroment)
- THDi ⩽ 48% for 80 to 100% load, which is used to maintain an optimum power factor on the most common operating range
- Embedded line choke technology complying with standard IEC 61000-3-12
- Prewired electric core components tested by Schneider Electric laboratories and test centers

Simple maintenance

Altivar Process Modular drives can significantly cut downtime of your assets by means of easily replaceable core components:
- Same power module with optimized weight and wheels (for standard drives) for all power ranges
- Same power fan inside a drawer accessible from front face for all power modules
- Spare parts designed for easy and fast intervention in the field

Altivar Process Modular Liquid-cooled

Liquid-cooled drives

Altivar Process Modular Liquid-cooled drives for cabinet integration offer a modular high-power solution for installation in cabinets and separate enclosures. Thanks to the optimized liquid cooling concept, these drives are suitable for operation in a very harsh environment. The integrated liquid cooling allows optimal dissipation of the heat losses and therefore optimizes the encapsulation of the whole electrical drive unit.

The liquid-cooled modules are designed for 6- or 12-pulse supply as standard.

Low Harmonic drive

Product features (continued)

Low Harmonic drives

The Low Harmonic drives are used when drives need to generate particularly low harmonics on the line supply.

In comparison with commonly-used 2-level AFE (active front end) architectures, the 3-level technology of Altivar Process Modular Low Harmonic drives allows this new technology to reach a total distortion factor (THDi) of around 2% and thus fulfills the requirements of standard IEEE 519 for a THDi < 5% in case of distorted mains. Additionally, the cos Phi ≈ 1 in each load situation (from 30 % Pn) helps to reduce the line supply load.

The Low Harmonic drives range is an optimum solution for energy efficiency and process optimization.

3

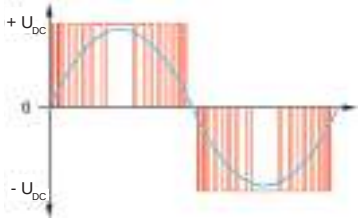

2-level technology

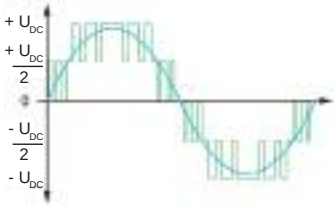

3-level technology

Device features

Enhanced motor service life due to the 3-level concept

The 3-level AIC (active infeed converter) technology reduces the voltage load at the motor significantly, compared with other low harmonic frequency inverters. The fluctuating adaptation of the DC link voltage helps to extend the motor service life.

Reduced losses due to the 3-level concept

In comparison with the traditional circuit structure of active mains rectifiers, the switching frequency is increased and the current load is reduced at the same time when using 3-level technology.

Compact dimensions due to the 3-level concept

A significant advantage of the 3-level technology is the reduced size of the integrated filter. Due to the increased switching frequency and its location inside the forced cooling air channel, the dimensions of the filter can be almost halved.

Variable speed drives

Altivar Process ATV600

Drives for integration

Altivar Process Modular Standard architecture from 1 to 6 modules

Altivar Process Modular Low Harmonic architecture from 1 to 6 modules

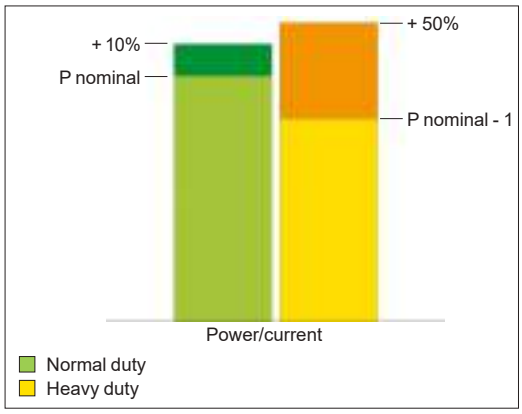

Normal duty and Heavy duty modes

Drive products for integration

Drive products for integration can be used for optimizing space when integrated inside cabinets. They cover motor power ratings from 0.75…90 kW/*1…125 HP* for 380…480 V three-phase voltages.

Three-phase power supply - 380...480 V (-15...10%)		
Motor power	**Degree of protection**	**Reference**
0.75...22 kW ***1...30 HP***	IP20	**ATV630U07N4Z...D22N4Z**
30…90 kW ***40...120 HP***	IP20	**ATV630D30N4Z...D90N4Z**

Modular drives, based on APM (Altivar Process Modular)

Modular drives solutions can be built using power modules, control units, and accessories. They cover motor power ratings from 75...2600 kW/*125...2600 HP* for 380...690 V three-phase voltages.

The APM drive references given in this catalog are representative of the operational drives that can be built with the APM offer. These operational drives must be integrated in a cabinet through an APM partner or through the integration services from Schneider Electric. Please contact your local Schneider Electric representative for more information on the local APM network and/or to get a quotation for an integrated APM drive.

Three-phase power supply - 380...480 V (-15...10%) Standard		
Motor power	**Degree of protection**	**Reference**
110...800 kW ***150...1100 HP***	IP00	**ATV6A0C11Q4...C80Q4** **ATV6A0C11R4...C80R4** **ATV6A0C11T4...C80T4**

Three-phase power supply - 500 V (-10...15%) & 600...690 V (-15...10%) Standard		
Motor power	**Degree of protection**	**Reference**
75…1200 kW ***125…1200 HP***	IP00	**ATV6A0C11N6...M12N6** **ATV6A0C11T6...M12T6** **ATV6A0C11Q6...M12Q6**

Three-phase power supply - 380...440 V (-15…10%) and 480 V (-10…10%) Low Harmonic		
Motor power	**Degree of protection**	**Reference**
110...800 kW ***150...1100 HP***	IP00	**ATV6B0C11Q4...C80Q4** **ATV6B0C11R4...C80R4** **ATV6B0C11T4...C80T4**

Three-phase power supply - 500 V (-15...10%) and 600...690 V (-10...10%) Low Harmonic		
Motor power	**Degree of protection**	**Reference**
75…1200 kW ***125…1200 HP***	IP00	**ATV6B0C11N6...M12N6** **ATV6B0C11T6...M12T6** **ATV6B0C11Q6...M12Q6**

Modular drives, based on APM-L (Altivar Process Modular Liquid-cooled)

Three-phase power supply - 400 V...480 V(-15...10%) Standard		
Motor power	**Degree of protection**	**Reference**
132...1800 kW ***200...2500 HP***	IP00	**ATV6L0C13Q4...M18Q4** **ATV6L0C13R4...M18R4** **ATV6L0C13T4...M18T4**

Three-phase power supply - 500 V...690 V(-15...10%) Standard		
Motor power	**Degree of protection**	**Reference**
132...2600 kW ***200...2600 HP***	IP00	**ATV6L0C20N6...M26N6** **ATV6L0C20T6...M26T6** **ATV6L0C20Q6...M26Q6**

Altivar Process Modular variable speed drives are designed for use in two operating modes that can optimize the drive nominal rating according to the system constraints.

These two modes are:

- Normal duty (ND): Dedicated mode for applications requiring a slight overload up to 110% with a motor power no higher than the drive nominal power
- Heavy duty (HD): Dedicated mode for applications requiring a significant overload up to 150% with a motor power no higher than the drive nominal power derated by one rating

Variable speed drives

Altivar Process ATV600

Drive products for integration

Three-phase supply voltage: 380...480 V 50/60 Hz

ATVPro_62317_CPMGU18006

ATV630U30N4Z

380…480 V (-15...10%) 50/60 Hz drive products for cabinet integration

Motor			Line supply				Altivar Process			
Power indicated on rating plate (1)			Line current (2)		Apparent power	Maximum prospective line Isc	Max. continuous current (1)	Max. transient current for 60 s	Reference (5)	Weight
			380 V	480 V	380 V					
ND:	Normal duty (3)									
HD:	*Heavy duty (4)*									
	kW	*HP*	A	A	kVA	kA	A	A		kg/ *lb*
With category C2 or C3 integrated EMC filter										
IP20 drives										
ND	0.75	*1*	1.5	1.3	1.1	50	2.2	2.4	ATV630U07N4Z	3.700/ *8.157*
HD	*0.37*	*0.5*	*0.9*	*0.8*	*0.7*	*50*	*1.5*	*2.3*		
ND	1.5	*2*	3	2.6	2.2	50	4	4.4	ATV630U15N4Z	3.700/ *8.157*
HD	*0.75*	*1*	*1.7*	*1.5*	*1.2*	*50*	*2.2*	*3.3*		
ND	2.2	*3*	4.3	3.8	3.2	50	5.6	6.2	ATV630U22N4Z	3.700/ *8.157*
HD	*1.5*	*2*	*3.1*	*2.9*	*2.4*	*50*	*4*	*6*		
ND	3	–	5.8	5.1	4.2	50	7.2	7.9	ATV630U30N4Z	3.800/ *8.377*
HD	*2.2*	*3*	*4.5*	*4*	*3.3*	*50*	*5.6*	*8.4*		
ND	4	*5*	7.6	6.7	5.6	50	9.3	10.2	ATV630U40N4Z	3.800/ *8.377*
HD	*3*	–	*6*	*5.4*	*4.5*	*50*	*7.2*	*10.8*		
ND	5.5	*7.5*	10.4	9.1	7.6	50	12.7	14	ATV630U55N4Z	3.900/ *8.598*
HD	*4*	*5*	*8*	*7.2*	*6.0*	*50*	*9.3*	*14*		
ND	7.5	*10*	13.8	11.9	9.9	50	16.5	18.2	ATV630U75N4Z	6.900/ *15.211*
HD	*5.5*	*7.5*	*10.5*	*9.2*	*7.6*	*50*	*12.7*	*19.1*		
ND	11	*15*	19.8	17	14.1	50	23.5	25.9	ATV630D11N4Z	6.900/ *15.211*
HD	*7.5*	*10*	*14.1*	*12.5*	*10.4*	*50*	*16.5*	*24.8*		
ND	15	*20*	27	23.3	19.4	50	31.7	34.9	ATV630D15N4Z	13.000/ *28.660*
HD	*11*	*15*	*20.6*	*18.1*	*15.0*	*50*	*23.5*	*35.3*		
ND	18.5	*25*	33.4	28.9	24	50	39.2	43.1	ATV630D18N4Z	*13.600/* 29.982
HD	*15*	*20*	*27.7*	*24.4*	*20.3*	*50*	*31.7*	*47.6*		
ND	22	*30*	39.6	34.4	28.6	50	46.3	50.9	ATV630D22N4Z	13.700/ *30.203*
HD	*18.5*	*25*	*34.1*	*29.9*	*24.9*	*50*	*39.2*	*58.8*		

(1) These values are given for use in continuous operation with a nominal switching frequency of 4 kHz (ATV630U07N4Z...D45N4Z).
The switching frequency is adjustable from 2…12 kHz (ATV630U07N4Z...D45N4Z).
Above the nominal switching frequency, the drive will automatically reduce the switching frequency in the event of an excessive temperature rise.
For continuous operation above the nominal switching frequency, nominal drive current should be derated according to the derating curves in the Installation Manual.

(2) Typical value for the indicated motor power and for the maximum prospective line Isc.

(3) Values given for applications requiring a slight overload (up to 110%).

(4) Values given for applications requiring a significant overload (up to 150%).

(5) For applications requiring Type 12 ready to use, add "U" at the end of the reference (ATV...N4ZU).

***Note:** Consult the summary tables of possible drive, option, and accessory combinations (see page 2/18).*

Variable speed drives

Altivar Process ATV600

Drive products for integration

Three-phase supply voltage: 380...480 V 50/60 Hz

ATVPro_62317_CPMGU18009

ATV630D30N4Z

380…480 V (-15...10%) 50/60 Hz drive products for cabinet integration

Motor			Line supply				Altivar Process			
Power indicated on rating plate (1)			Line current (2)		Apparent power	Maximum prospective line Isc	Max. continuous current (1)	Max. transient current for 60 s	Reference (5)	Weight
			380 V	480 V	380 V					
ND:	Normal duty (3)									
HD:	Heavy duty (4)									
	kW	HP	A	A	kVA	kA	A	A		kg/ lb
With category C2 or C3 integrated EMC filter										
IP20 drives (6)										
ND	30	40	53.3	45.9	38.2	50	61.5	67.7	ATV630D30N4Z	25.800/ 56.879
HD	22	30	40.5	35.8	29.8	50	46.3	69.5		
ND	37	50	66.2	57.3	47.6	50	74.5	82	ATV630D37N4Z	26.000/ 57.320
HD	30	40	54.8	48.3	40.2	50	61.5	92.3		
ND	45	60	79.8	69.1	57.4	50	88	96.8	ATV630D45N4Z	26.500/ 58.422
HD	37	50	67.1	59.0	49.1	50	74.5	111.8		
ND	55	75	97.2	84.2	70	50	106	116.6	ATV630D55N4Z	52.600/ 115.963
HD	45	60	81.4	71.8	59.7	50	88	132		
ND	75	100	131.3	112.7	93.7	50	145	159.5	ATV630D75N4Z	54.100/ 119.269
HD	55	75	98.9	86.9	72.2	50	106	159		
ND	90	125	156.2	135.8	112.9	50	173	190.3	ATV630D90N4Z	54.600/ 120.372
HD	75	100	134.3	118.1	98.2	50	145	217.5		

EMC plates for ATV630●●●N4Z

Corresponding drive	Plate reference	Weight kg/ lb
ATV630U07N4Z...U55N4Z	VW3A47801	0.390/ 0.860
ATV630U75N4Z, D11N4Z	VW3A47802	0.430/ 0.948
ATV630D15N4Z...D22N4Z	VW3A47803	0.520/ 1.146
ATV630D30N4Z...D37N4Z	VW3A47804	1.000/ 2.205
ATV630D55N4Z...D90N4Z	VW3A47805	1.670/ 3.682

(1) These values are given for use in continuous operation with a nominal switching frequency of 4 kHz (ATV630U07N4Z...D45N4Z).
The switching frequency is adjustable from 2…12 kHz (ATV630U07N4Z...D45N4Z).
Above the nominal switching frequency, the drive will automatically reduce the switching frequency in the event of an excessive temperature rise.
For continuous operation above the nominal switching frequency, nominal drive current should be derated according to the derating curves in the Installation Manual.

(2) Typical value for the indicated motor power and for the maximum prospective line Isc.

(3) Values given for applications requiring a slight overload (up to 110%).

(4) Values given for applications requiring a significant overload (up to 150%).

(5) For applications requiring Type 12 ready to use, add "U" at the end of the reference (ATV...N4ZU).

(6) These drives are IP00 at the bottom terminals for power connection.

Variable speed drives

Altivar Process ATV600

Modular drives

Three-phase supply voltage: 400 V 50/60 Hz

ATVM_CP19044

ATV6A0C11Q4

ATVM_CP19049

ATV6A0C25Q4

400 V (-15...10%) IP00 Modular Standard drives (1)

Motor			Line supply			Altivar Process		
Power indicated on rating plate (2)			Line current (3)	Apparent power	Maximum prospective line Isc	Maximum continuous current (2)	Max. transient current for 60 s	Reference (4)
			400 V	400 V				
ND:	Normal duty							
HD:	*Heavy duty*							
	kW	*HP*	A	kVA	kA	A	A	
Altivar Process Modular for fluid management								
THDi ≤ 48% at 100% load in Normal duty								
ND	110	–	198	137	50	211	232	ATV6A0C11Q4
HD	*90*	*–*	*167*	*116*	*50*	*173*	*260*	
ND	132	–	233	161	50	250	275	ATV6A0C13Q4
HD	*110*	*–*	*198*	*137*	*50*	*211*	*317*	
ND	160	–	278	193	50	302	332	ATV6A0C16Q4
HD	*132*	*–*	*233*	*161*	*50*	*250*	*375*	
ND	200	–	352	244	50	370	407	ATV6A0C20Q4
HD	*160*	*–*	*290*	*201*	*50*	*302*	*453*	
ND	250	–	432	299	50	477	525	ATV6A0C25Q4
HD	*200*	*–*	*353*	*245*	*50*	*370*	*555*	
ND	315	–	538	373	50	590	649	ATV6A0C31Q4
HD	*250*	*–*	*432*	*299*	*50*	*477*	*716*	
ND	355	–	611	423	50	660	726	ATV6A0C35Q4
HD	*280*	*–*	*489*	*339*	*50*	*520*	*780*	
ND	400	–	681	472	50	730	803	ATV6A0C40Q4
HD	*315*	*–*	*545*	*378*	*50*	*590*	*885*	
ND	450	–	764	529	50	830	913	ATV6A0C45Q4
HD	*355*	*–*	*611*	*423*	*50*	*660*	*990*	
ND	500	–	846	586	50	900	990	ATV6A0C50Q4
HD	*400*	*–*	*681*	*472*	*50*	*730*	*1095*	
ND	560	–	948	657	50	1020	1122	ATV6A0C56Q4
HD	*450*	*–*	*767*	*531*	*50*	*830*	*1245*	
ND	630	–	1058	733	50	1140	1254	ATV6A0C63Q4
HD	*500*	*–*	*849*	*588*	*50*	*900*	*1350*	
ND	710	–	1192	826	50	1260	1386	ATV6A0C71Q4
HD	*560*	*–*	*951*	*659*	*50*	*1020*	*1530*	
ND	800	–	1335	925	50	1420	1562	ATV6A0C80Q4
HD	*630*	*–*	*1061*	*735*	*50*	*1140*	*1710*	

(1) Integrated motor chokes allowing a shielded motor cable length up to 300 m/984 ft in category C3.
(2) These values are given for a nominal switching frequency of 2.5 kHz for use in continuous operation.
The switching frequency is adjustable from 2 to 4.9 kHz for all ratings.
Above 2.5 kHz, the drive will automatically reduce the switching frequency in the event of an excessive temperature rise.
For continuous operation above the nominal switching frequency, derate the nominal drive current. Contact your APM partner for more information.
(3) Typical value for the indicated motor power and for the maximum prospective line Isc.
(4) These references are built by combining sub-assemblies and accessories that are integrated by Altivar Process Modular Program members. Contact your APM partner for more information on possible drive architectures.

***Note:** Altivar Process Modular Standard drives can be designed as Reduced Height versions for integration in cabinets with a height of 1.6 m/5.25 ft. Contact your APM partner for more information.*

Variable speed drives

Altivar Process ATV600

Modular drives

Three-phase supply voltage: 440 V 50/60 Hz

ATVM_CP19049

ATV6A0C20R4

ATVM_OP19050

ATV6A0C35R4

440 V (-15...10%) IP00 Modular Standard drives *(1)*

Motor			Line supply			Altivar Process		
Power indicated on rating plate *(2)*			Line current *(3)*	Apparent power	Maximum prospective line Isc	Maximum continuous current *(2)*	Max. transient current for 60 s	Reference *(4)*
			440 V	440 V				
ND:	Normal duty							
HD:	*Heavy duty*							
	kW	*HP*	A	kVA	kA	A	A	
Altivar Process Modular for fluid management								
THDi ≤ 48% at 100% load in Normal duty								
ND	110	–	183	139	50	211	232	ATV6A0C11R4
HD	*90*	*–*	*155*	*118*	*50*	*173*	*260*	
ND	132	–	214	163	50	250	275	ATV6A0C13R4
HD	*110*	*–*	*183*	*139*	*50*	*211*	*317*	
ND	160	–	255	194	50	302	332	ATV6A0C16R4
HD	*132*	*–*	*214*	*163*	*50*	*250*	*375*	
ND	160	–	325	248	50	370	407	ATV6A0C20R4
HD	*160*	*–*	*269*	*205*	*50*	*302*	*453*	
ND	250	–	396	302	50	477	525	ATV6A0C25R4
HD	*200*	*–*	*325*	*248*	*50*	*370*	*555*	
ND	315	–	493	376	50	590	649	ATV6A0C31R4
HD	*250*	*–*	*396*	*302*	*50*	*477*	*716*	
ND	355	–	559	426	50	660	726	ATV6A0C35R4
HD	*280*	*–*	*450*	*343*	*50*	*520*	*780*	
ND	400	–	623	475	50	730	803	ATV6A0C40R4
HD	*315*	*–*	*501*	*382*	*50*	*590*	*885*	
ND	450	–	697	531	50	830	913	ATV6A0C45R4
HD	*355*	*–*	*559*	*426*	*50*	*660*	*990*	
ND	500	–	771	588	50	900	990	ATV6A0C50R4
HD	*400*	*–*	*623*	*475*	*50*	*730*	*1095*	
ND	560	–	865	659	50	1020	1122	ATV6A0C56R4
HD	*450*	*–*	*703*	*536*	*50*	*830*	*1245*	
ND	630	–	965	735	50	1140	1254	ATV6A0C63R4
HD	*500*	*–*	*776*	*591*	*50*	*900*	*1350*	
ND	710	–	1087	828	50	1260	1386	ATV6A0C71R4
HD	*580*	*–*	*869*	*662*	*50*	*1020*	*1530*	
ND	800	–	1216	927	50	1420	1562	ATV6A0C80R4
HD	*630*	*–*	*968*	*738*	*50*	*1140*	*1710*	

(1) Integrated motor chokes allowing a shielded motor cable length up to 300 m/984 ft in category C3.
(2) These values are given for a nominal switching frequency of 2.5 kHz for use in continuous operation.
The switching frequency is adjustable from 2 to 4.9 kHz for all ratings.
Above 2.5 kHz, the drive will automatically reduce the switching frequency in the event of an excessive temperature rise.
For continuous operation above the nominal switching frequency, derate the nominal drive current. Contact your APM partner for more information.
(3) Typical value for the indicated motor power and for the maximum prospective line Isc.
(4) These references are built by combining sub-assemblies and accessories that are integrated by Altivar Process Modular Program members. Contact your APM partner for more information on possible drive architectures.

Note: *Altivar Process Modular Standard drives can be designed as Reduced Height versions for integration in cabinets with a height of 1.6 m/5.25 ft. Contact your APM partner for more information.*

Variable speed drives

Altivar Process ATV600

Modular drives

Three-phase supply voltage: 480 V 50/60 Hz

ATVM_OP19051

ATV6A0C56T4

ATVM_OP19052

ATV6A0C80T4

3

480 V (-15...10%) IP00 Modular Standard drives (1)								
Motor			Line supply			Altivar Process		
Power indicated on rating plate (2)			Line current (3)	Apparent power	Maximum prospective line Isc	Maximum continuous current (2)	Max. transient current for 60 s	Reference (4)
			480 V	480 V				
ND:	Normal duty							
HD:	*Heavy duty*							
	kW	*HP*	A	kVA	kA	A	A	
Altivar Process Modular for fluid management								
THDi ≤ 48% at 100% load in Normal duty								
ND	–	*150*	168	140	50	211	232	**ATV6A0C11T4**
HD	–	*125*	*145*	*121*	*50*	*173*	*260*	
ND	–	*200*	218	181	50	250	275	**ATV6A0C13T4**
HD	–	*150*	*168*	*140*	*50*	*211*	*317*	
ND	–	*250*	268	223	50	302	332	**ATV6A0C16T4**
HD	–	*200*	*218*	*181*	*50*	*250*	*375*	
ND	–	*300*	328	273	50	370	407	**ATV6A0C20T4**
HD	–	*250*	*280*	*233*	*50*	*302*	*453*	
ND	–	*400*	427	355	50	477	525	**ATV6A0C25T4**
HD	–	*300*	*328*	*273*	*50*	*370*	*555*	
ND	–	*500*	528	439	50	590	649	**ATV6A0C31T4**
HD	–	*400*	*427*	*355*	*50*	*477*	*716*	
ND	–	*550*	586	487	50	660	726	**ATV6A0C35T4**
HD	–	*450*	*486*	*404*	*50*	*520*	*780*	
ND	–	*600*	634	527	50	730	803	**ATV6A0C40T4**
HD	–	*500*	*536*	*446*	*50*	*590*	*885*	
ND	–	*650*	685	569	50	830	913	**ATV6A0C45T4**
HD	–	*550*	*586*	*487*	*50*	*660*	*990*	
ND	–	*700*	736	612	50	900	990	**ATV6A0C50T4**
HD	–	*600*	*634*	*527*	*50*	*730*	*1095*	
ND	–	*800*	842	700	50	1020	1122	**ATV6A0C56T4**
HD	–	*650*	*690*	*574*	*50*	*830*	*1245*	
ND	–	*900*	939	781	50	1140	1254	**ATV6A0C63T4**
HD	–	*700*	*740*	*615*	*50*	*900*	*1350*	
ND	–	*1000*	1044	868	50	1260	1386	**ATV6A0C71T4**
HD	–	*800*	*846*	*703*	*50*	*1020*	*1530*	
ND	–	*1100*	1146	953	50	1420	1562	**ATV6A0C80T4**
HD	–	*900*	*942*	*783*	*50*	*1140*	*1710*	

(1) Integrated motor chokes allowing a shielded motor cable length up to 300 m/984 ft in category C3.
(2) These values are given for a nominal switching frequency of 2.5 kHz for use in continuous operation.
The switching frequency is adjustable from 2 to 4.9 kHz for all ratings.
Above 2.5 kHz, the drive will automatically reduce the switching frequency in the event of an excessive temperature rise.
For continuous operation above the nominal switching frequency, derate the nominal drive current. Contact your APM partner for more information.
(3) Typical value for the indicated motor power and for the maximum prospective line Isc.
(4) These references are built by combining sub-assemblies and accessories that are integrated by Altivar Process Modular Program members. Contact your APM partner for more information on possible drive architectures.

***Note:** Altivar Process Modular Standard drives can be designed as Reduced Height versions for integration in cabinets with a height of 1.6 m/5.25 ft. Contact your APM partner for more information.*

Variable speed drives

Altivar Process ATV600

Modular drives

Three-phase supply voltage: 500 V 50/60 Hz

ATVM_CP19044

ATV6A0C11N6

ATVM_CP19049

ATV6A0C25N6

500 V (-10...15%) IP00 Modular Standard drives *(1)*

Motor			Line supply			Altivar Process		
Power indicated on rating plate *(2)*			Line current *(3)*	Apparent power	Maximum prospective line Isc	Maximum continuous current *(2)*	Max. transient current for 60 s	Reference *(4)*
			500 V	500 V				
ND:	Normal duty							
HD:	*Heavy duty*							
	kW	*HP*	A	kVA	kA	A	A	
Altivar Process Modular for fluid management								
THDi ≤ 48% at 100% load in Normal duty								
ND	*75*	–	110	95	50	125	138	ATV6A0C11N6
HD	*55*	–	*83*	*72*	*50*	*105*	*158*	
ND	*90*	–	129	112	50	145	160	ATV6A0C13N6
HD	*75*	–	*110*	*95*	*50*	*125*	*188*	
ND	*110*	–	154	133	50	175	193	ATV6A0C16N6
HD	*90*	–	*129*	*112*	*50*	*145*	*218*	
ND	*132*	–	183	158	50	215	237	ATV6A0C20N6
HD	*110*	–	*154*	*133*	*50*	*175*	*263*	
ND	*160*	–	225	195	50	275	303	ATV6A0C25N6
HD	*132*	–	*190*	*165*	*50*	*215*	*323*	
ND	*220*	–	303	262	50	340	374	ATV6A0C31N6
HD	*160*	–	*225*	*195*	*50*	*275*	*413*	
ND	*280*	–	380	329	50	425	468	ATV6A0C40N6
HD	*220*	–	*303*	*262*	*50*	*340*	*510*	
ND	*355*	–	484	419	50	520	572	ATV6A0C50N6
HD	*280*	–	*385*	*333*	*50*	*425*	*638*	
ND	*450*	–	607	526	50	650	715	ATV6A0C63N6
HD	*355*	–	*484*	*419*	*50*	*520*	*780*	
ND	*560*	–	756	655	50	830	913	ATV6A0C80N6
HD	*450*	–	*610*	*528*	*50*	*650*	*975*	
ND	*710*	–	954	826	50	1030	1133	ATV6A0M10N6
HD	*560*	–	*758*	*656*	*50*	*830*	*1245*	
ND	*800*	–	1070	927	50	1230	1353	ATV6A0M12N6
HD	*710*	–	*954*	*826*	*50*	*1030*	*1545*	

(1) Integrated motor chokes allowing a shielded motor cable length up to 300 m/984 ft in category C3.
(2) These values are given for a nominal switching frequency of 2.5 kHz for use in continuous operation.
The switching frequency is adjustable from 2 to 4.9 kHz for all ratings.
Above 2.5 kHz, the drive will automatically reduce the switching frequency in the event of an excessive temperature rise.
For continuous operation above the nominal switching frequency, derate the nominal drive current. Contact your APM partner for more information.
(3) Typical value for the indicated motor power and for the maximum prospective line Isc.
(4) These references are built by combining sub-assemblies and accessories that are integrated by Altivar Process Modular Program members. Contact your APM partner for more information on possible drive architectures.

***Note:** Altivar Process Modular Standard drives can be designed as Reduced Height versions for integration in cabinets with a height of 1.6 m/5.25 ft. Contact your APM partner for more information.*

Variable speed drives

Altivar Process ATV600

Modular drives

Three-phase supply voltage: 600 V 50/60 Hz

ATVM_OP19050

ATV6A0C50T6

ATVM_OP19051

ATV6A0C80T6

600 V (-15...10%) IP00 Modular Standard drives (1)

Motor			Line supply			Altivar Process		
Power indicated on rating plate (2)			Line current (3)	Apparent power	Maximum prospective line Isc (4)	Maximum continuous current (2)	Max. transient current for 60 s	Reference (5)
			600 V	600 V				
ND:	Normal duty							
HD:	Heavy duty							
	kW	HP	A	kVA	kA	A	A	
Altivar Process Modular for fluid management								
THDi ≤ 48% at 100% load in Normal duty								
ND	–	125	112	116	50	125	138	ATV6A0C11T6
HD	–	100	92	96	50	105	158	
ND	–	150	131	136	50	145	160	ATV6A0C13T6
HD	–	125	112	116	50	125	188	
ND	–	175	152	158	50	175	193	ATV6A0C16T6
HD	–	150	131	136	50	145	218	
ND	–	200	172	179	50	215	237	ATV6A0C20T6
HD	–	175	152	158	50	175	263	
ND	–	250	218	227	50	275	303	ATV6A0C25T6
HD	–	200	179	186	50	215	323	
ND	–	350	298	310	50	340	374	ATV6A0C31T6
HD	–	250	218	227	50	275	413	
ND	–	450	379	394	50	425	468	ATV6A0C40T6
HD	–	350	298	310	50	340	510	
ND	–	550	464	482	50	520	572	ATV6A0C50T6
HD	–	450	383	398	50	425	638	
ND	–	650	544	565	50	650	715	ATV6A0C63T6
HD	–	550	464	482	50	520	780	
ND	–	800	670	696	50	830	913	ATV6A0C80T6
HD	–	650	547	568	50	650	975	
ND	–	1000	833	866	50	1030	1133	ATV6A0M10T6
HD	–	800	673	699	50	830	1245	
ND	–	1200	994	1033	50	1230	1353	ATV6A0M12T6
HD	–	1000	835	835	50	1030	1545	

(1) Integrated motor chokes allowing a shielded motor cable length up to 300 m/984 ft in category C3.
(2) These values are given for a nominal switching frequency of 2.5 kHz for use in continuous operation.
The switching frequency is adjustable from 2 to 4.9 kHz for all ratings.
Above 2.5 kHz, the drive will automatically reduce the switching frequency in the event of an excessive temperature rise.
For continuous operation above the nominal switching frequency, derate the nominal drive current. Contact your APM partner for more information.
(3) Typical value for the indicated motor power and for the maximum prospective line Isc.
(4) For 600V UL certified drives, a higher SCCR is possible under some conditions. Consult your APM Partner for customized solutions.
(5) These references are built by combining sub-assemblies and accessories that are integrated by Altivar Process Modular Program members. Contact your APM partner for more information on possible drive architectures.

***Note:** Altivar Process Modular Standard drives can be designed as Reduced Height versions for integration in cabinets with a height of 1.6 m/5.25 ft. Contact your APM partner for more information.*

Variable speed drives

Altivar Process ATV600

Modular drives

Three-phase supply voltage: 690 V 50/60 Hz

ATVM_OP19052

ATV6A0M10Q6

ATVM_OP19053

ATV6A0M12Q6

690 V (-15...10%) IP00 Modular Standard drives *(1)*

Motor			Line supply			Altivar Process		
Power indicated on rating plate *(2)*			Line current *(3)*	Apparent power	Maximum prospective line Isc	Maximum continuous current *(2)*	Max. transient current for 60 s	Reference *(4)*
			690 V	690 V				
ND:	Normal duty							
HD:	*Heavy duty*							
	kW	*HP*	A	kVA	kA	A	A	
Altivar Process Modular for fluid management								
THDi ≤ 48% at 100% load in Normal duty								
ND	*110*	–	118	141	50	125	138	ATV6A0C11Q6
HD	*90*	–	*100*	*120*	*50*	*105*	*158*	
ND	*132*	–	138	165	50	145	160	ATV6A0C13Q6
HD	*110*	–	*118*	*141*	*50*	*125*	*188*	
ND	*160*	–	163	195	50	175	193	ATV6A0C16Q6
HD	*132*	–	*138*	*165*	*50*	*145*	*218*	
ND	*200*	–	200	239	50	215	237	ATV6A0C20Q6
HD	*160*	–	*163*	*195*	*50*	*175*	*263*	
ND	*250*	–	255	305	50	275	303	ATV6A0C25Q6
HD	*200*	–	*211*	*252*	*50*	*215*	*323*	
ND	*315*	–	316	378	50	340	374	ATV6A0C31Q6
HD	*250*	–	*255*	*305*	*50*	*275*	*413*	
ND	*400*	–	394	471	50	425	468	ATV6A0C40Q6
HD	*315*	–	*316*	*378*	*50*	*340*	*510*	
ND	*500*	–	495	592	50	520	572	ATV6A0C50Q6
HD	*400*	–	*401*	*479*	*50*	*425*	*638*	
ND	*630*	–	615	735	50	650	715	ATV6A0C63Q6
HD	*500*	–	*495*	*592*	*50*	*520*	*780*	
ND	*800*	–	776	927	50	830	913	ATV6A0C80Q6
HD	*630*	–	*619*	*740*	*50*	*650*	*975*	
ND	*1000*	–	969	1158	50	1030	1133	ATV6A0M10Q6
HD	*800*	–	*779*	*931*	*50*	*830*	*1245*	
ND	*1200*	–	1161	1388	50	1230	1353	ATV6A0M12Q6
HD	*1000*	–	*971*	*1160*	*50*	*1030*	*1545*	

(1) Integrated motor chokes allowing a shielded motor cable length up to 300 m/984 ft in category C3.
(2) These values are given for a nominal switching frequency of 2.5 kHz for use in continuous operation.
The switching frequency is adjustable from 2 to 4.9 kHz for all ratings.
Above 2.5 kHz, the drive will automatically reduce the switching frequency in the event of an excessive temperature rise.
For continuous operation above the nominal switching frequency, derate the nominal drive current. Contact your APM partner for more information.
(3) Typical value for the indicated motor power and for the maximum prospective line Isc.
(4) These references are built by combining sub-assemblies and accessories that are integrated by Altivar Process Modular Program members. Contact your APM partner for more information on possible drive architectures.

***Note:** Altivar Process Modular Standard drives can be designed as Reduced Height versions for integration in cabinets with a height of 1.6 m/5.25 ft. Contact your APM partner for more information.*

Variable speed drives

Altivar Process ATV600

Modular Low Harmonic drives

Three-phase supply voltage: 400 V 50/60 Hz

ATVPro_62317_CPMGU180016

ATV6B0C11Q4

ATVPro_CP19025

ATV6B0C20Q4

3

400 V (-15…10%) IP00 Modular Low Harmonic drives *(1)*

Motor			Line supply			Altivar Process		
Power indicated on rating plate *(2)*			Line current *(3)*	Apparent power	Maximum prospective line Isc	Maximum continuous current *(2)*	Max. transient current for 60 s	Reference *(4)*
			400 V	400 V				
ND:	Normal duty							
HD:	*Heavy duty*							
	kW	*HP*	A	kVA	kA	A	A	
Altivar Process Modular for fluid management								
THDi ≤ 5% at 100% load in Normal duty								
ND	110	–	175	121	50	211	232	ATV6B0C11Q4
HD	*90*	–	*144*	*100*	*50*	*173*	*260*	
ND	132	–	208	144	50	250	275	ATV6B0C13Q4
HD	*110*	–	*174*	*121*	*50*	*211*	*317*	
ND	160	–	252	174	50	302	332	ATV6B0C16Q4
HD	*132*	–	*208*	*144*	*50*	*250*	*375*	
ND	200	–	313	217	50	370	407	ATV6B0C20Q4
HD	*160*	–	*252*	*174*	*50*	*302*	*453*	
ND	250	–	389	270	50	477	525	ATV6B0C25Q4
HD	*200*	–	*313*	*217*	*50*	*370*	*555*	
ND	315	–	491	340	50	590	649	ATV6B0C31Q4
HD	*250*	–	*389*	*270*	*50*	*477*	*716*	
ND	355	–	553	383	50	660	726	ATV6B0C35Q4
HD	*280*	–	*436*	*302*	*50*	*520*	*780*	
ND	400	–	620	429	50	730	803	ATV6B0C40Q4
HD	*315*	–	*491*	*340*	*50*	*590*	*885*	
ND	450	–	697	483	50	830	913	ATV6B0C45Q4
HD	*355*	–	*553*	*383*	*50*	*660*	*990*	
ND	500	–	775	537	50	900	990	ATV6B0C50Q4
HD	*400*	–	*620*	*429*	*50*	*730*	*1095*	
ND	560	–	868	601	50	1020	1122	ATV6B0C56Q4
HD	*450*	–	*697*	*483*	*50*	*830*	*1245*	
ND	630	–	971	673	50	1140	1254	ATV6B0C63Q4
HD	*500*	–	*775*	*537*	*50*	*900*	*1350*	
ND	710	–	1094	758	50	1260	1386	ATV6B0C71Q4
HD	*560*	–	*868*	*601*	*50*	*1020*	*1530*	
ND	800	–	1227	850	50	1420	1562	ATV6B0C80Q4
HD	*630*	–	*971*	*673*	*50*	*1140*	*1710*	

(1) Integrated motor chokes allowing a shielded motor cable length up to 300 m/984 ft in category C3.
(2) These values are given for a nominal switching frequency of 2.5 kHz for use in continuous operation.
The switching frequency is adjustable from 2 to 4.9 kHz for all ratings.
Above 2.5 kHz, the drive will automatically reduce the switching frequency in the event of an excessive temperature rise.
For continuous operation above the nominal switching frequency, derate the nominal drive current. Contact your APM partner for more information.
(3) Typical value for the indicated motor power and for the maximum prospective line Isc.
(4) These references are built by combining sub-assemblies and accessories that are integrated by Altivar Process Modular Program members. Contact your APM partner for more information on possible drive architectures.

Variable speed drives

Altivar Process ATV600

Modular Low Harmonic drives

Three-phase supply voltage: 440 V 50/60 Hz

ATVPro_CP19026

ATV6B0C31R4

ATVPro_CP19027

ATV6B0C56R4

440 V (-15…10%) IP00 Modular Low Harmonic drives (1)								
Motor			Line supply			Altivar Process		
Power indicated on rating plate (2)			Line current (3)	Apparent power	Maximum prospective line Isc	Maximum continuous current (2)	Max. transient current for 60 s	Reference (4)
			440 V	440 V				
ND:	Normal duty							
HD:	*Heavy duty*							
	kW	*HP*	A	kVA	kA	A	A	
Altivar Process Modular for fluid management								
THDi ≤ 5% at 100% load in Normal duty								
ND	110	–	159	121	50	211	232	ATV6B0C11R4
HD	*90*	*–*	*132*	*100*	*50*	*173*	*260*	
ND	132	–	190	145	50	250	275	ATV6B0C13R4
HD	*110*	*–*	*159*	*121*	*50*	*211*	*317*	
ND	160	–	229	174	50	302	332	ATV6B0C16R4
HD	*132*	*–*	*190*	*145*	*50*	*250*	*375*	
ND	200	–	285	217	50	370	407	ATV6B0C20R4
HD	*160*	*–*	*229*	*174*	*50*	*302*	*453*	
ND	250	–	354	270	50	477	525	ATV6B0C25R4
HD	*200*	*–*	*285*	*217*	*50*	*370*	*555*	
ND	315	–	446	340	50	590	649	ATV6B0C31R4
HD	*250*	*–*	*354*	*270*	*50*	*477*	*716*	
ND	355	–	503	383	50	660	726	ATV6B0C35R4
HD	*280*	*–*	*396*	*302*	*50*	*520*	*780*	
ND	400	–	563	429	50	730	803	ATV6B0C40R4
HD	*315*	*–*	*446*	*340*	*50*	*590*	*885*	
ND	450	–	634	483	50	830	913	ATV6B0C45R4
HD	*355*	*–*	*503*	*383*	*50*	*660*	*990*	
ND	500	–	704	537	50	900	990	ATV6B0C50R4
HD	*400*	*–*	*563*	*429*	*50*	*730*	*1095*	
ND	560	–	789	601	50	1020	1122	ATV6B0C56R4
HD	*450*	*–*	*634*	*483*	*50*	*830*	*1245*	
ND	630	–	883	673	50	1140	1254	ATV6B0C63R4
HD	*500*	*–*	*704*	*537*	*50*	*900*	*1350*	
ND	710	–	995	758	50	1260	1386	ATV6B0C71R4
HD	*560*	*–*	*789*	*601*	*50*	*1020*	*1530*	
ND	800	–	1115	850	50	1420	1562	ATV6B0C80R4
HD	*630*	*–*	*883*	*673*	*50*	*1140*	*1710*	

(1) Integrated motor chokes allowing a shielded motor cable length up to 300 m/984 ft in category C3.
(2) These values are given for a nominal switching frequency of 2.5 kHz for use in continuous operation.
The switching frequency is adjustable from 2 to 4.9 kHz for all ratings.
Above 2.5 kHz, the drive will automatically reduce the switching frequency in the event of an excessive temperature rise.
For continuous operation above the nominal switching frequency, derate the nominal drive current. Contact your APM partner for more information.
(3) Typical value for the indicated motor power and for the maximum prospective line Isc.
(4) These references are built by combining sub-assemblies and accessories that are integrated by Altivar Process Modular Program members. Contact your APM partner for more information on possible drive architectures.

Variable speed drives

Altivar Process ATV600

Modular Low Harmonic drives

Three-phase supply voltage: 480 V 50/60 Hz

ATVPro_CP19028

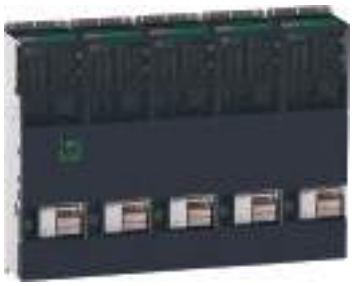

ATV6B0C45T4

ATVPro_CP19023

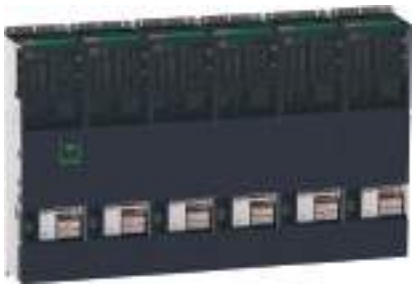

ATV6B0C71T4

480 V (-10…10%) IP00 Modular Low Harmonic drives (1)								
Motor			Line supply			Altivar Process		
Power indicated on rating plate (2)			Line current (3)	Apparent power	Maximum prospective line Isc	Maximum continuous current (2)	Max. transient current for 60 s	Reference (4)
			480 V	480 V				
ND:	Normal duty							
HD:	Heavy duty							
	kW	HP	A	kVA	kA	A	A	
Altivar Process Modular for fluid management								
THDi ≤ 5% at 100% load in Normal duty								
ND	–	150	148	123	50	211	232	ATV6B0C11T4
HD	–	125	125	104	50	173	260	
ND	–	200	197	164	50	250	275	ATV6B0C13T4
HD	–	150	148	123	50	211	317	
ND	–	250	245	203	50	302	332	ATV6B0C16T4
HD	–	200	197	164	50	250	375	
ND	–	300	292	243	50	370	407	ATV6B0C20T4
HD	–	250	245	203	50	302	453	
ND	–	400	387	322	50	477	525	ATV6B0C25T4
HD	–	300	292	243	50	370	555	
ND	–	500	484	402	50	590	649	ATV6B0C31T4
HD	–	400	387	322	50	477	716	
ND	–	550	533	443	50	660	726	ATV6B0C35T4
HD	–	450	436	362	50	520	780	
ND	–	600	578	480	50	730	803	ATV6B0C40T4
HD	–	500	484	402	50	590	885	
ND	–	650	626	520	50	830	913	ATV6B0C45T4
HD	–	550	533	443	50	660	990	
ND	–	700	674	561	50	900	990	ATV6B0C50T4
HD	–	600	578	480	50	730	1095	
ND	–	800	771	641	50	1020	1122	ATV6B0C56T4
HD	–	650	626	520	50	830	1245	
ND	–	900	862	717	50	1140	1254	ATV6B0C63T4
HD	–	700	674	561	50	900	1350	
ND	–	1000	958	797	50	1260	1386	ATV6B0C71T4
HD	–	800	771	641	50	1020	1530	
ND	–	1100	1049	872	50	1420	1562	ATV6B0C80T4
HD	–	900	862	717	50	1140	1710	

(1) Integrated motor chokes allowing a shielded motor cable length up to 300 m/984 ft in category C3.
(2) These values are given for a nominal switching frequency of 2.5 kHz for use in continuous operation.
The switching frequency is adjustable from 2 to 4.9 kHz for all ratings.
Above 2.5 kHz, the drive will automatically reduce the switching frequency in the event of an excessive temperature rise.
For continuous operation above the nominal switching frequency, derate the nominal drive current. Contact your APM partner for more information.
(3) Typical value for the indicated motor power and for the maximum prospective line Isc.
(4) These references are built by combining sub-assemblies and accessories that are integrated by Altivar Process Modular Program members. Contact your APM partner for more information on possible drive architectures.

Variable speed drives

Altivar Process ATV600

Modular Low Harmonic drives

Three-phase supply voltage: 500 V 50/60 Hz

ATVPro_62317_CPMGU180016

ATV6B0C11N6

ATVPro_CP19025

ATV6B0C25N6

500 V (-15...10%) IP00 Modular Low Harmonic drives *(1)*

Motor			Line supply			Altivar Process		
Power indicated on rating plate *(2)*			Line current *(3)*	Apparent power	Maximum prospective line Isc	Maximum continuous current *(2)*	Max. transient current for 60 s	Reference *(4)*
			500 V	500 V				
ND:	Normal duty							
HD:	*Heavy duty*							
	kW	*HP*	A	kVA	kA	A	A	
Altivar Process Modular for fluid management								
THDi ≤ 5% at 100% load in Normal duty								
ND	75	–	98	85	50	125	138	ATV6B0C11N6
HD	*55*	*–*	*72*	*62*	*50*	*105*	*158*	
ND	90	–	117	101	50	145	160	ATV6B0C13N6
HD	*75*	*–*	*98*	*85*	*50*	*125*	*188*	
ND	110	–	141	122	50	175	193	ATV6B0C16N6
HD	*90*	*–*	*117*	*101*	*50*	*145*	*218*	
ND	132	–	169	146	50	215	237	ATV6B0C20N6
HD	*110*	*–*	*141*	*122*	*50*	*175*	*263*	
ND	160	–	204	176	50	275	303	ATV6B0C25N6
HD	*132*	*–*	*169*	*146*	*50*	*215*	*323*	
ND	220	–	278	241	50	340	374	ATV6B0C31N6
HD	*160*	*–*	*204*	*176*	*50*	*275*	*413*	
ND	280	–	352	305	50	425	468	ATV6B0C40N6
HD	*220*	*–*	*278*	*241*	*50*	*340*	*510*	
ND	355	–	446	386	50	520	572	ATV6B0C50N6
HD	*280*	*–*	*352*	*305*	*50*	*425*	*638*	
ND	450	–	562	487	50	650	715	ATV6B0C63N6
HD	*355*	*–*	*446*	*386*	*50*	*520*	*780*	
ND	560	–	701	607	50	830	913	ATV6B0C80N6
HD	*450*	*–*	*564*	*488*	*50*	*650*	*975*	
ND	710	–	884	766	50	1030	1133	ATV6B0M10N6
HD	*560*	*–*	*701*	*607*	*50*	*830*	*1245*	
ND	800	–	991	859	50	1230	1353	ATV6B0M12N6
HD	*710*	*–*	*884*	*766*	*50*	*1030*	*1545*	

(1) Integrated motor chokes allowing a shielded motor cable length up to 300 m/984 ft in category C3.
(2) These values are given for a nominal switching frequency of 2.5 kHz for use in continuous operation.
The switching frequency is adjustable from 2 to 4.9 kHz for all ratings.
Above 2.5 kHz, the drive will automatically reduce the switching frequency in the event of an excessive temperature rise.
For continuous operation above the nominal switching frequency, derate the nominal drive current. Contact your APM partner for more information.
(3) Typical value for the indicated motor power and for the maximum prospective line Isc.
(4) These references are built by combining sub-assemblies and accessories that are integrated by Altivar Process Modular Program members. Contact your APM partner for more information on possible drive architectures.

Variable speed drives

Altivar Process ATV600

Modular Low Harmonic drives

Three-phase supply voltage: 600 V 50/60 Hz

ATVPro_CP19026

ATV6B0C50T6

ATVPro_CP19027

ATV6B0C80T6

3

600 V (-10...10%) IP00 Modular Low Harmonic drives (1)								
Motor			Line supply			Altivar Process		
Power indicated on rating plate (2)			Line current (3)	Apparent power	Maximum prospective line Isc (4)	Maximum continuous current (2)	Max. transient current for 60 s	Reference (5)
			600 V	600 V				
ND:	Normal duty							
HD:	*Heavy duty*							
	kW	*HP*	A	kVA	kA	A	A	
Altivar Process Modular for fluid management								
THDi ≤ 5% at 100% load in Normal duty								
ND	–	125	102	106	50	125	138	ATV6B0C11T6
HD	–	*100*	*82*	*86*	*50*	*105*	*158*	
ND	–	150	121	126	50	145	160	ATV6B0C13T6
HD	–	*125*	*102*	*106*	*50*	*125*	*188*	
ND	–	175	142	147	50	175	193	ATV6B0C16T6
HD	–	*150*	*121*	*126*	*50*	*145*	*218*	
ND	–	200	161	167	50	215	237	ATV6B0C20T6
HD	–	*175*	*142*	*147*	*50*	*175*	*263*	
ND	–	250	199	207	50	275	303	ATV6B0C25T6
HD	–	*200*	*160*	*166*	*50*	*215*	*323*	
ND	–	350	277	288	50	340	374	ATV6B0C31T6
HD	–	*250*	*199*	*207*	*50*	*275*	*413*	
ND	–	450	355	369	50	425	468	ATV6B0C40T6
HD	–	*350*	*277*	*288*	*50*	*340*	*510*	
ND	–	550	434	451	50	520	572	ATV6B0C50T6
HD	–	*450*	*355*	*369*	*50*	*425*	*638*	
ND	–	650	511	531	50	650	715	ATV6B0C63T6
HD	–	*550*	*434*	*451*	*50*	*520*	*780*	
ND	–	800	628	652	50	830	913	ATV6B0C80T6
HD	–	*650*	*513*	*533*	*50*	*650*	*975*	
ND	–	1000	785	815	50	1030	1133	ATV6B0M10T6
HD	–	*800*	*628*	*652*	*50*	*830*	*1245*	
ND	–	1200	937	973	50	1230	1353	ATV6B0M12T6
HD	–	*1000*	*785*	*815*	*50*	*1030*	*1545*	

(1) Integrated motor chokes allowing a shielded motor cable length up to 300 m/984 ft in category C3.
(2) These values are given for a nominal switching frequency of 2.5 kHz for use in continuous operation.
The switching frequency is adjustable from 2 to 4.9 kHz for all ratings.
Above 2.5 kHz, the drive will automatically reduce the switching frequency in the event of an excessive temperature rise.
For continuous operation above the nominal switching frequency, derate the nominal drive current. Contact your APM partner for more information.
(3) Typical value for the indicated motor power and for the maximum prospective line Isc.
(4) For 600V UL certified drives, a higher SCCR is possible under some conditions. Consult your APM Partner for customized solutions.
(5) These references are built by combining sub-assemblies and accessories that are integrated by Altivar Process Modular Program members. Contact your APM partner for more information on possible drive architectures.

Variable speed drives

Altivar Process ATV600

Modular Low Harmonic drives

Three-phase supply voltage: 690 V 50/60 Hz

ATVPro_CP19028

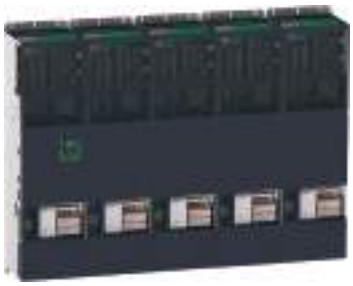

ATV6B0M10Q6

ATVPro_CP19023

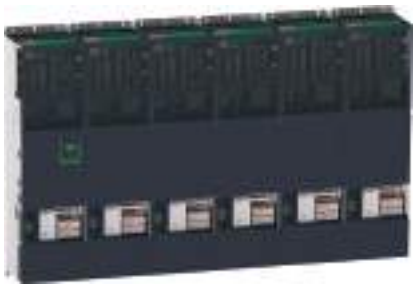

ATV6B0M12Q6

690 V (-10...10%) IP00 Modular Low Harmonic drives *(1)*

Motor			Line supply			Altivar Process		
Power indicated on rating plate *(2)*			Line current *(3)*	Apparent power	Maximum prospective line Isc	Maximum continuous current *(2)*	Max. transient current for 60 s	Reference *(4)*
			690 V	690 V				
ND:	Normal duty							
HD:	*Heavy duty*							
	kW	*HP*	A	kVA	kA	A	A	
Altivar Process Modular for fluid management								
THDi ≤ 5% at 100% load in Normal duty								
ND	110	–	102	122	50	125	138	ATV6B0C11Q6
HD	*90*	*–*	*85*	*101*	*50*	*105*	*158*	
ND	132	–	122	146	50	145	160	ATV6B0C13Q6
HD	*110*	*–*	*102*	*122*	*50*	*125*	*188*	
ND	160	–	148	177	50	175	193	ATV6B0C16Q6
HD	*132*	*–*	*122*	*146*	*50*	*145*	*218*	
ND	200	–	183	219	50	215	237	ATV6B0C20Q6
HD	*160*	*–*	*148*	*177*	*50*	*175*	*263*	
ND	250	–	228	273	50	275	303	ATV6B0C25Q6
HD	*200*	*–*	*183*	*219*	*50*	*215*	*323*	
ND	315	–	287	343	50	340	374	ATV6B0C31Q6
HD	*250*	*–*	*228*	*273*	*50*	*275*	*413*	
ND	400	–	363	434	50	425	468	ATV6B0C40Q6
HD	*315*	*–*	*287*	*343*	*50*	*340*	*510*	
ND	500	–	453	541	50	520	572	ATV6B0C50Q6
HD	*400*	*–*	*362*	*433*	*50*	*425*	*638*	
ND	630	–	568	678	50	650	715	ATV6B0C63Q6
HD	*500*	*–*	*453*	*541*	*50*	*520*	*780*	
ND	800	–	718	859	50	830	913	ATV6B0C80Q6
HD	*630*	*–*	*569*	*680*	*50*	*650*	*975*	
ND	1000	–	898	1073	50	1030	1133	ATV6B0M10Q6
HD	*800*	*–*	*718*	*859*	*50*	*830*	*1245*	
ND	1200	–	1078	1288	50	1230	1353	ATV6B0M12Q6
HD	*1000*	*–*	*898*	*1073*	*50*	*1030*	*1545*	

(1) Integrated motor chokes allowing a shielded motor cable length up to 300 m/984 ft in category C3.
(2) These values are given for a nominal switching frequency of 2.5 kHz for use in continuous operation.
The switching frequency is adjustable from 2 to 4.9 kHz for all ratings.
Above 2.5 kHz, the drive will automatically reduce the switching frequency in the event of an excessive temperature rise.
For continuous operation above the nominal switching frequency, derate the nominal drive current. Contact your APM partner for more information.
(3) Typical value for the indicated motor power and for the maximum prospective line Isc.
(4) These references are built by combining sub-assemblies and accessories that are integrated by Altivar Process Modular Program members. Contact your APM partner for more information on possible drive architectures.

Variable speed drives

Altivar Process ATV600

Modular Liquid-cooled drives

Three-phase supply voltage: 400 V 50/60 Hz

ATVM_CP20132

ATV6L0C13Q4

ATVM_CP20133

ATV6L0C50Q4

3

400 V (-15...10%) IP00 Modular Liquid-cooled drives (1)

Motor			Line supply			Altivar Process		
Power indicated on rating plate (2)			Line current (3)	Apparent power	Maximum prospective line Isc	Maximum continuous current (2)	Max. transient current for 60 s	Reference (4)
			400 V	400 V				
ND:	Normal duty							
HD:	*Heavy duty*							
	kW	*HP*	A	kVA	kA	A	A	
Altivar Process Modular Liquid-cooled								
THDi ≤ 48% at 100% load in Normal duty with 6-pulse supply *(5)*								
ND	*132*	-	244	169	50	250	275	ATV6L0C13Q4
HD	*110*	-	*210*	*145*	*50*	*211*	*317*	
ND	*160*	-	287	199	50	302	332	ATV6L0C16Q4
HD	*132*	-	*244*	*169*	*50*	*250*	*375*	
ND	*200*	-	350	242	50	370	407	ATV6L0C20Q4
HD	*160*	-	*287*	*199*	*50*	*302*	*453*	
ND	*250*	-	429	297	50	477	525	ATV6L0C25Q4
HD	*200*	-	*350*	*242*	*50*	*370*	*555*	
ND	*315*	-	536	371	50	590	649	ATV6L0C31Q4
HD	*250*	-	*429*	*297*	*50*	*477*	*716*	
ND	*400*	-	684	474	50	730	803	ATV6L0C40Q4
HD	*315*	-	*549*	*380*	*50*	*590*	*885*	
ND	*500*	-	847	587	50	900	990	ATV6L0C50Q4
HD	*400*	-	*684*	*474*	*50*	*730*	*1095*	
ND	*630*	-	1056	732	50	1140	1254	ATV6L0C63Q4
HD	*500*	-	*847*	*587*	*50*	*900*	*1350*	
ND	*800*	-	1335	925	50	1420	1562	ATV6L0C80Q4
HD	*630*	-	*1062*	*736*	*50*	*1140*	*1710*	
ND	*900*	-	1502	1041	50	1600	1760	ATV6L0C90Q4
HD	*710*	-	*1188*	*823*	*50*	*1260*	*1890*	
ND	*1000*	-	1669	1156	50	1770	1947	ATV6L0M10Q4
HD	*800*	-	*1339*	*928*	*50*	*1420*	*2130*	
ND	*1200*	-	2005	1389	50	2140	2354	ATV6L0M12Q4
HD	*1000*	-	*1669*	*1156*	*50*	*1770*	*2655*	
ND	*1500*	-	2513	1741	50	2680	2948	ATV6L0M15Q4
HD	*1200*	-	*2005*	*1389*	*50*	*2140*	*3210*	
ND	*1800*	-	3028	2098	50	3200	3520	ATV6L0M18Q4
HD	*1400*	-	*2341*	*1622*	*50*	*2470*	*3705*	

(1) Integrated motor chokes allowing a shielded motor cable length up to 300 m/984 ft in category C3.
(2) These values are given for a nominal switching frequency of 2.5 kHz for use in continuous operation.
The switching frequency is adjustable from 2 to 4.9 kHz for all ratings.
Above 2.5 kHz, the drive will automatically reduce the switching frequency in the event of an excessive temperature rise.
For continuous operation above the nominal switching frequency, derate the nominal drive current. Contact your APM partner for more information.
(3) Typical value for the indicated motor power and for the maximum prospective line Isc.
(4) These references are built by combining sub-assemblies and accessories that are integrated by Altivar Process Modular Program members. Contact your APM partner for more information.
(5) APM-L architecture is ready for 12-pulse supply which allows a THDi ≤9%.

Variable speed drives

Altivar Process ATV600

Modular Liquid-cooled drives

Three-phase supply voltage: 440 V 50/60 Hz

ATVM_CP20134

ATV6L0C80R4

ATVM_CP20135

ATV6L0M10R4

440 V (-15...10%) IP00 Modular Liquid-cooled drives (1)

Motor			Line supply			Altivar Process		
Power indicated on rating plate (2)			Line current (3)	Apparent power	Maximum prospective line Isc	Maximum continuous current (2)	Max. transient current for 60 s	Reference (4)
			440 V	440 V				
ND:	Normal duty							
HD:	*Heavy duty*							
	kW	*HP*	A	kVA	kA	A	A	
Altivar Process Modular Liquid-cooled								
THDi ≤48% at 100% load in Normal duty with 6-pulse supply *(5)*								
ND	132	-	228	174	50	250	275	ATV6L0C13R4
HD	*110*	-	*198*	*151*	*50*	*211*	*317*	
ND	160	-	266	203	50	302	332	ATV6L0C16R4
HD	*132*	-	*228*	*174*	*50*	*250*	*375*	
ND	200	-	323	246	50	370	407	ATV6L0C20R4
HD	*160*	-	*266*	*203*	*50*	*302*	*453*	
ND	250	-	394	300	50	477	525	ATV6L0C25R4
HD	*200*	-	*323*	*246*	*50*	*370*	*555*	
ND	315	-	490	373	50	590	649	ATV6L0C31R4
HD	*250*	-	*394*	*300*	*50*	*477*	*716*	
ND	400	-	627	478	50	730	803	ATV6L0C40R4
HD	*315*	-	*506*	*386*	*50*	*590*	*885*	
ND	500	-	774	590	50	900	990	ATV6L0C50R4
HD	*400*	-	*627*	*478*	*50*	*730*	*1095*	
ND	630	-	963	734	50	1140	1254	ATV6L0C63R4
HD	*500*	-	*774*	*590*	*50*	*900*	*1350*	
ND	800	-	1217	927	50	1420	1562	ATV6L0C80R4
HD	*630*	-	*969*	*738*	*50*	*1140*	*1710*	
ND	900	-	1365	1040	50	1600	1760	ATV6L0C90R4
HD	*710*	-	*1083*	*825*	*50*	*1260*	*1890*	
ND	1000	-	1518	1157	50	1770	1947	ATV6L0M10R4
HD	*800*	-	*1220*	*930*	*50*	*1420*	*2130*	
ND	1200	-	1820	1387	50	2140	2354	ATV6L0M12R4
HD	*1000*	-	*1518*	*1157*	*50*	*1770*	*2655*	
ND	1500	-	2279	1737	50	2680	2948	ATV6L0M15R4
HD	*1200*	-	*1820*	*1387*	*50*	*2140*	*3210*	
ND	1800	-	2741	2089	50	3200	3520	ATV6L0M18R4
HD	*1400*	-	*2125*	*1619*	*50*	*2470*	*3705*	

(1) Integrated motor chokes allowing a shielded motor cable length up to 300 m/984 ft in category C3.
(2) These values are given for a nominal switching frequency of 2.5 kHz for use in continuous operation.
The switching frequency is adjustable from 2 to 4.9 kHz for all ratings.
Above 2.5 kHz, the drive will automatically reduce the switching frequency in the event of an excessive temperature rise.
For continuous operation above the nominal switching frequency, derate the nominal drive current. Contact your APM partner for more information.
(3) Typical value for the indicated motor power and for the maximum prospective line Isc.
(4) These references are built by combining sub-assemblies and accessories that are integrated by Altivar Process Modular Program members. Contact your APM partner for more information.
(5) APM-L architecture is ready for 12-pulse supply which allows a THDi ≤9%.

Variable speed drives

Altivar Process ATV600

Modular Liquid-cooled drives

Three-phase supply voltage: 480 V 50/60 Hz

ATVM_CP20136

ATV6L0M15T4

ATVM_CP20137

ATV6L0M18T4

480 V (-15...10%) IP00 Modular Liquid-cooled drives (1)

Motor			Line supply			Altivar Process		
Power indicated on rating plate (2)			Line current (3)	Apparent power	Maximum prospective line Isc	Maximum continuous current (2)	Max. transient current for 60 s	Reference (4)
			480 V	480 V				
ND:	Normal duty							
HD:	*Heavy duty*							
	kW	*HP*	A	kVA	kA	A	A	
Altivar Process Modular Liquid-cooled								
THDi ≤48% at 100% load in Normal duty with 6-pulse supply *(5)*								
ND	-	200	230	191	50	250	275	ATV6L0C13T4
HD	*-*	*150*	*183*	*152*	*50*	*211*	*317*	
ND	-	250	278	231	50	302	332	ATV6L0C16T4
HD	*-*	*200*	*230*	*191*	*50*	*250*	*375*	
ND	-	300	327	272	50	370	407	ATV6L0C20T4
HD	*-*	*250*	*278*	*231*	*50*	*302*	*453*	
ND	-	400	425	353	50	477	525	ATV6L0C25T4
HD	*-*	*300*	*327*	*272*	*50*	*370*	*555*	
ND	-	500	527	438	50	590	649	ATV6L0C31T4
HD	*-*	*400*	*425*	*353*	*50*	*477*	*716*	
ND	-	600	638	530	50	730	803	ATV6L0C40T4
HD	*-*	*500*	*540*	*449*	*50*	*590*	*885*	
ND	-	700	738	614	50	900	990	ATV6L0C50T4
HD	*-*	*600*	*638*	*530*	*50*	*730*	*1095*	
ND	-	900	938	780	50	1140	1254	ATV6L0C63T4
HD	*-*	*700*	*738*	*614*	*50*	*900*	*1350*	
ND	-	1100	1148	954	50	1420	1562	ATV6L0C80T4
HD	*-*	*900*	*944*	*785*	*50*	*1140*	*1710*	
ND	-	1300	1345	1118	50	1600	1760	ATV6L0C90T4
HD	*-*	*1000*	*1045*	*869*	*50*	*1260*	*1890*	
ND	-	1400	1451	1206	50	1770	1947	ATV6L0M10T4
HD	*-*	*1100*	*1151*	*957*	*50*	*1420*	*2130*	
ND	-	1700	1761	1464	50	2140	2354	ATV6L0M12T4
HD	*-*	*1400*	*1451*	*1206*	*50*	*1770*	*2655*	
ND	-	2200	2282	1897	50	2680	2948	ATV6L0M15T4
HD	*-*	*1700*	*1761*	*1464*	*50*	*2140*	*3210*	
ND	-	2500	2598	2160	50	3200	3520	ATV6L0M18T4
HD	*-*	*2000*	*2073*	*1723*	*50*	*2470*	*3705*	

(1) Integrated motor chokes allowing a shielded motor cable length up to 300 m/984 ft in category C3.
(2) These values are given for a nominal switching frequency of 2.5 kHz for use in continuous operation.
The switching frequency is adjustable from 2 to 4.9 kHz for all ratings.
Above 2.5 kHz, the drive will automatically reduce the switching frequency in the event of an excessive temperature rise.
For continuous operation above the nominal switching frequency, derate the nominal drive current.
Contact your APM partner for more information.
(3) Typical value for the indicated motor power and for the maximum prospective line Isc.
(4) These references are built by combining sub-assemblies and accessories that are integrated by Altivar Process Modular Program members. Contact your APM partner for more information.
(5) APM-L architecture is ready for 12-pulse supply which allows a THDi ≤9%.

Variable speed drives

Altivar Process ATV600

Modular Liquid-cooled drives

Three-phase supply voltage: 500 V 50/60 Hz

ATVM_CP20132

ATV6L0C40N6

ATVM_CP20133

ATV6L0C71N6

500 V (-15...10%) IP00 Modular Liquid-cooled drives (1)

Motor			Line supply			Altivar Process		
Power indicated on rating plate (2)			Line current (3)	Apparent power	Maximum prospective line Isc	Maximum continuous current (2)	Max. transient current for 60 s	Reference (4)
			500 V	500 V				
ND:	Normal duty							
HD:	*Heavy duty*							
	kW	*HP*	A	kVA	kA	A	A	
Altivar Process Modular Liquid-cooled								
THDi ≤ 48% at 100% load in Normal duty with 6-pulse supply *(5)*								
ND	*132*	-	196	170	50	215	237	ATV6L0C20N6
HD	*110*	-	*169*	*146*	*50*	*175*	*263*	
ND	*200*	-	281	243	50	308	339	ATV6L0C28N6
HD	*160*	-	*230*	*199*	*50*	*240*	*360*	
ND	*220*	-	307	266	50	340	374	ATV6L0C31N6
HD	*180*	-	*256*	*222*	*50*	*275*	*413*	
ND	*250*	-	344	298	50	425	468	ATV6L0C40N6
HD	*220*	-	*307*	*266*	*50*	*340*	*510*	
ND	*315*	-	429	372	50	480	528	ATV6L0C45N6
HD	*250*	-	*344*	*298*	*50*	*384*	*576*	
ND	*400*	-	549	475	50	590	649	ATV6L0C56N6
HD	*315*	-	*442*	*383*	*50*	*480*	*720*	
ND	*500*	-	679	588	50	740	814	ATV6L0C71N6
HD	*400*	-	*549*	*475*	*50*	*590*	*885*	
ND	*630*	-	846	733	50	930	1023	ATV6L0C90N6
HD	*500*	-	*679*	*588*	*50*	*740*	*1110*	
ND	*800*	-	1070	927	50	1230	1353	ATV6L0M12N6
HD	*710*	-	*957*	*829*	*50*	*1030*	*1545*	
ND	*1000*	-	1335	1156	50	1425	1568	ATV6L0M14N6
HD	*800*	-	*1070*	*927*	*50*	*1130*	*1695*	
ND	*1200*	-	1603	1388	50	1620	1782	ATV6L0M16N6
HD	*900*	-	*1204*	*1043*	*50*	*1330*	*1995*	
ND	*1300*	-	1737	1504	50	1820	2002	ATV6L0M18N6
HD	*1000*	-	*1335*	*1156*	*50*	*1425*	*2138*	
ND	*1600*	-	2141	1854	50	2220	2442	ATV6L0M22N6
HD	*1200*	-	*1602*	*1387*	*50*	*1720*	*2580*	
ND	*1900*	-	2550	2208	50	2620	2882	ATV6L0M26N6
HD	*1500*	-	*2005*	*1736*	*50*	*2120*	*3180*	

(1) Integrated motor chokes allowing a shielded motor cable length up to 300 m/984 ft in category C3.
(2) These values are given for a nominal switching frequency of 2.5 kHz for use in continuous operation.
The switching frequency is adjustable from 2 to 4.9 kHz for all ratings.
Above 2.5 kHz, the drive will automatically reduce the switching frequency in the event of an excessive temperature rise.
For continuous operation above the nominal switching frequency, derate the nominal drive current. Contact your APM partner for more information.
(3) Typical value for the indicated motor power and for the maximum prospective line Isc.
(4) These references are built by combining sub-assemblies and accessories that are integrated by Altivar Process Modular Program members. Contact your APM partner for more information.
(5) APM-L architecture is ready for 12-pulse supply which allows a THDi ≤9%.

Variable speed drives

Altivar Process ATV600

Modular Liquid-cooled drives

Three-phase supply voltage: 600 V 50/60 Hz

ATVM_CP20134

ATV6L0M14T6

ATVM_CP20135

ATV6L0M16T6

600 V (-15...10%) IP00 Modular Liquid-cooled drives (1)

Motor			Line supply			Altivar Process		
Power indicated on rating plate (2)			Line current (3)	Apparent power	Maximum prospective line Isc	Maximum continuous current (2)	Max. transient current for 60 s	Reference (4)
			600 V	600 V				
ND:	Normal duty							
HD:	*Heavy duty*							
	kW	*HP*	A	kVA	kA	A	A	
Altivar Process Modular Liquid-cooled								
THDi ≤48% at 100% load in Normal duty with 6-pulse supply *(5)*								
ND	-	*200*	184	191	50	215	237	ATV6L0C20T6
HD	-	*150*	*146*	*152*	*50*	*175*	*263*	
ND	-	*300*	261	271	50	308	339	ATV6L0C28T6
HD	-	*200*	*184*	*191*	*50*	*240*	*360*	
ND	-	*350*	302	314	50	340	374	ATV6L0C31T6
HD	-	*250*	*223*	*232*	*50*	*275*	*413*	
ND	-	*450*	381	396	50	425	468	ATV6L0C40T6
HD	-	*350*	*302*	*314*	*50*	*340*	*510*	
ND	-	*500*	422	439	50	480	528	ATV6L0C45T6
HD	-	*400*	*340*	*353*	*50*	*384*	*576*	
ND	-	*600*	512	532	50	590	649	ATV6L0C56T6
HD	-	*500*	*434*	*451*	*50*	*480*	*720*	
ND	-	*700*	592	615	50	740	814	ATV6L0C71T6
HD	-	*600*	*512*	*532*	*50*	*590*	*885*	
ND	-	*900*	751	780	50	930	1023	ATV6L0C90T6
HD	-	*700*	*592*	*615*	*50*	*740*	*1110*	
ND	-	*1200*	996	1035	50	1230	1353	ATV6L0M12T6
HD	-	*1000*	*838*	*871*	*50*	*1030*	*1545*	
ND	-	*1400*	1159	1204	50	1425	1568	ATV6L0M14T6
HD	-	*1100*	*919*	*955*	*50*	*1130*	*1695*	
ND	-	*1600*	1325	1377	50	1620	1782	ATV6L0M16T6
HD	-	*1300*	*1081*	*1123*	*50*	*1330*	*1995*	
ND	-	*1800*	1490	1548	50	1820	2002	ATV6L0M18T6
HD	-	*1400*	*1162*	*1208*	*50*	*1425*	*2138*	
ND	-	*2200*	1823	1895	50	2220	2442	ATV6L0M22T6
HD	-	*1700*	*1409*	*1464*	*50*	*1720*	*2580*	
ND	-	*2600*	2156	2241	50	2620	2882	ATV6L0M26T6
HD	-	*2100*	*1740*	*1808*	*50*	*2120*	*3180*	

(1) Integrated motor chokes allowing a shielded motor cable length up to 300 m/984 ft in category C3.
(2) These values are given for a nominal switching frequency of 2.5 kHz for use in continuous operation.
The switching frequency is adjustable from 2 to 4.9 kHz for all ratings.
Above 2.5 kHz, the drive will automatically reduce the switching frequency in the event of an excessive temperature rise.
For continuous operation above the nominal switching frequency, derate the nominal drive current. Contact your APM partner for more information.
(3) Typical value for the indicated motor power and for the maximum prospective line Isc.
(4) These references are built by combining sub-assemblies and accessories that are integrated by Altivar Process Modular Program members. Contact your APM partner for more information.
(5) APM-L architecture is ready for 12-pulse supply which allows a THDi ≤9%.

Variable speed drives

Altivar Process ATV600

Modular Liquid-cooled drives

Three-phase supply voltage: 690 V 50/60 Hz

ATVM_CP20136

ATV6L0M22Q6

ATVM_CP20137

ATV6L0M26Q6

690 V (-15...10%) IP00 Modular Liquid-cooled drives (1)

Motor			Line supply			Altivar Process		
Power indicated on rating plate (2)			Line current (3)	Apparent power	Maximum prospective line Isc	Maximum continuous current (2)	Max. transient current for 60 s	Reference (4)
			690 V	690 V				
ND:	Normal duty							
HD:	Heavy duty							
	kW	HP	A	kVA	kA	A	A	
Altivar Process Modular Liquid-cooled								
THDi ≤48% at 100% load in Normal duty with 6-pulse supply (5)								
ND	200	-	218	261	50	215	237	ATV6L0C20Q6
HD	160	-	184	220	50	175	263	
ND	280	-	290	347	50	308	339	ATV6L0C28Q6
HD	220	-	236	282	50	240	360	
ND	315	-	322	385	50	340	374	ATV6L0C31Q6
HD	250	-	262	313	50	275	413	
ND	400	-	399	477	50	425	468	ATV6L0C40Q6
HD	315	-	322	385	50	340	510	
ND	450	-	446	533	50	480	528	ATV6L0C45Q6
HD	355	-	359	429	50	384	576	
ND	560	-	563	673	50	590	649	ATV6L0C56Q6
HD	450	-	462	552	50	480	720	
ND	710	-	700	837	50	740	814	ATV6L0C71Q6
HD	560	-	563	673	50	590	885	
ND	900	-	875	1046	50	930	1023	ATV6L0C90Q6
HD	710	-	700	837	50	740	1110	
ND	1200	-	1260	1506	50	1230	1353	ATV6L0M12Q6
HD	1000	-	976	1166	50	1030	1545	
ND	1400	-	1355	1619	50	1425	1568	ATV6L0M14Q6
HD	1100	-	1070	1279	50	1130	1695	
ND	1600	-	1547	1849	50	1620	1782	ATV6L0M16Q6
HD	1300	-	1262	1508	50	1330	1995	
ND	1800	-	1740	2080	50	1820	2002	ATV6L0M18Q6
HD	1400	-	1357	1622	50	1425	2138	
ND	2200	-	2128	2543	50	2220	2442	ATV6L0M22Q6
HD	1700	-	1644	1965	50	1720	2580	
ND	2600	-	2517	3008	50	2620	2882	ATV6L0M26Q6
HD	2100	-	2030	2426	50	2120	3180	

(1) Integrated motor chokes allowing a shielded motor cable length up to 300 m/984 ft in category C3.
(2) These values are given for a nominal switching frequency of 2.5 kHz for use in continuous operation. The switching frequency is adjustable from 2 to 4.9 kHz for all ratings. Above 2.5 kHz, the drive will automatically reduce the switching frequency in the event of an excessive temperature rise. For continuous operation above the nominal switching frequency, derate the nominal drive current. Contact your APM partner for more information.
(3) Typical value for the indicated motor power and for the maximum prospective line Isc.
(4) These references are built by combining sub-assemblies and accessories that are integrated by Altivar Process Modular Program members. Contact your APM partner for more information.
(5) APM-L architecture is ready for 12-pulse supply which allows a THDi ≤9%.

Contents

4 - Drive Systems

Altivar Process Drive Systems

- **Altivar Process Drive Systems presentation** ..... page 4/2
- **Compact Drive Systems** ..... page 4/4
  - Compact Drive Systems presentation ..... page 4/4
  - Options ..... page 4/7
  - 380...415 V 50/60 Hz supply, IP23 Compact Drive Systems ..... page 4/8
  - 480 V 50/60 Hz supply, IP23 Compact Drive Systems ..... page 4/9
- **Low Harmonic Drive Systems** ..... page 4/10
  - Low Harmonic Drive Systems presentation ..... page 4/10
  - Options ..... page 4/13
  - 380...415 V 50/60 Hz supply, IP23 Low Harmonic Drive Systems..... .page 4/14
  - 480 V 50/60 Hz supply, IP23 Low Harmonic Drive Systems..... page 4/15
- **Options** ..... page 4/16
  - Common CTO options ..... page 4/16
  - CTO options dependent on the drive rating..... page 4/17
- **Dimensions** ..... page 4/20

4

Variable speed drives
Altivar Process ATV600
Drive Systems

ATV660C31Q4X1

Engineered Drive Systems

Altivar Process Drive Systems offer extensive flexibility for customers from different segments and for various applications.

Several solutions are available depending on customer requirements.

Configured to order (CTO)

Configured Drive Systems (CTO) can be quickly customized to fit your requirements via our Altivar Process Configurator Tool.

Thanks to pre-defined CTO options, the CTO variant significantly reduces the delivery time for individually adapted drives, ready to connect.

The available CTO options are:
- Increased IP54 protection rating
- Enclosure plinth for basic device
- Additional enclosure allowing cabling from the top or from the bottom
- Enclosure lighting and heating
- “Local/remote” key switch
- Ethernet port on front door
- Extended I/O modules and extended relay modules
- Communication modules for various fieldbus systems
- STO - SIL 3 Stop category 0 or 1 Emergency stop
- Front display module (FDM)
- Indicator lights on front door
- Motor/bearing temperature monitoring
- dv/dt filters for long motor cables
- Motor heating
- Circuit breaker
- Undervoltage coil for circuit breaker
- Motor for circuit breaker
- Automated mains disconnect
- Setting for 415 V + 10%
- Safety labels in the local language
- Design for IT systems
- Seaworthy packaging

Altivar Process Configuration Tool

Configure your drive system with the
Altivar Process Configurator Tool
altivar-process-configurator.schneider-electric.com

Outdoor design

Multipulse design

Multidrive

Engineered Drive Systems (continued)

Engineered to order (ETO)

Our experts help you to find an effective Drive Systems (ETO) solution for your application. Starting from the integration of small drives up to individual enclosure design for harsh environments.

Enclosure modifications
- Different enclosure types
- Drives with reduced enclosure dimensions
- E-house integration
- Special colors
- Customer branded solutions
- Design for marine, automotive, and special applications
- Etc.

Cooling adaptations
- Separate air flow
- Connection to cooling channels
- Liquid-cooled drives
- Outdoor installations for harsh environments
- Different protection ratings
- Etc.

Electrical adaptations
- AC or DC multidrive
- Bypass solutions
- Multipulse or Active Front End (AFE)
- Various motor protection solutions
- Adaption to individual mains conditions
- Braking and regenerative solutions
- Etc.

To inquire about your individual drive solution, contact your local Schneider Electric drives expert or consult our *Customer Care Teams*.

4

Variable speed drives
Altivar Process ATV600
Compact Drive Systems

ATV660C31Q4X1

Presentation

Concept

The ATV660 Compact Drive Systems range offers standard enclosures ready to connect. The modular construction makes it possible to adapt the enclosure unit to individual requirements. The low-cost enclosure variant simplifies design and allows quick drive installation and commissioning.

Power versus overload

For optimum adaptation to the application you can choose between two overload modes:

- Normal duty: High continuous power with an overload capability of 10% (for pumps, fans, etc.)
- Heavy duty: Reduced continuous power with an increased overload capability of 50% for drives with enhanced requirements regarding overload capability, starting torque, load impacts, and control performance (such as compressors, mixers, rotary blowers, etc.)

Standard equipment

The standard compact offer contains frequency inverter modules, semiconductor fuses, a main switch, a line reactor to reduce the harmonics, a motor choke to limit overvoltage on the motor due to long cables, and spacious mains and motor bars for connecting the power cables.

The design is based on the ready-assembled Sarel ‘‘Spacial SF’’ enclosures with a graphic operating panel integrated in the enclosure door.

Compact dimensions

Inside the enclosure there is an easily accessible and spaciously designed control panel with the control components. Despite its compact dimensions, the enclosure has enough space for additional extensions and is easily accessible for maintenance purposes.

Variable speed drives

Altivar Process ATV600
Compact Drive Systems

Cooling concept

Device features

Enclosure system

The ready-assembled Sarel ‘‘Spacial SF’’ enclosure with additional internal reinforcing elements and separate cooling air channels provides optimum cooling of the built-in frequency inverter modules and maximum compactness.

Cooling concept

The power section components are cooled in a separate cooling air channel. About 90% of the heat losses are evacuated via this channel. The inside of the enclosure is cooled via fans in the enclosure door.

When using the ‘‘increased IP54 protection rating’’ option, the separate air supply for the power section comes through the enclosure plinth.

Connection

The power cables are connected on the mains side and motor side to spaciously designed bars. The cable strain relief is realized via another bar with solid metal clamps. Each device is equipped with an EMC screen bar for correct shielding connection. In the standard design, the cables are connected at the bottom.

Protection ratings

The standard design of Altivar Process Compact Drive Systems complies with IP23 protection. This solution provides optimum cooling of the built-in frequency inverter modules and power components, as well as maximum compactness.

For operation in harsh ambient conditions, increased IP54 protection is available as an option. This solution consists of a clearly specified and tested cooling system with a separate cooling air channel, which provides excellent reliability.

About 90% of the heat losses are evacuated via the separate cooling air channel. The inside of the enclosure is cooled via fans located in the enclosure door.

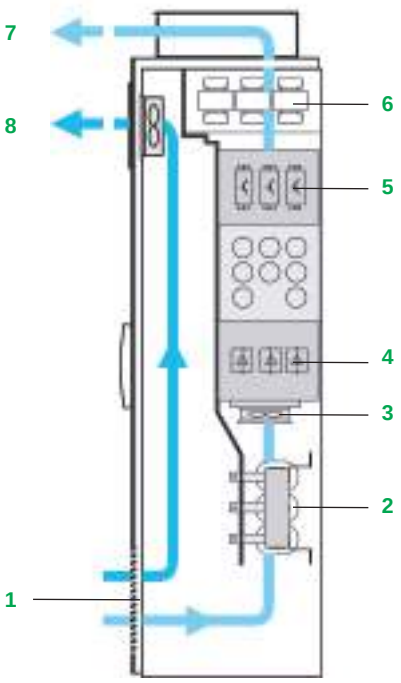

IP23 enclosure

Standard IP23 enclosure design

In order to avoid internal air short-circuits, the power sections of the components are located in the main cooling air channel.

The cooling air intake comes from a grid located in the bottom of the enclosure door. The internal fan, which is in a separate air channel, provides cooling of the power section. The air then comes out through the top of the enclosure.

The heat losses from the control section are evacuated by a fan in the enclosure door.

The incoming air temperature must be between 0 °C/*32 °F* and 40 °C/*104 °F* (-10 °C/*14 °F* with enclosure heating) and can reach 50 °C/*122 °F* with derating (class 3K3 according to IEC/EN 60721-3-3).

IP23 enclosures comprise:
1 An air intake (without filter mat) via a grid on the bottom of the enclosure door
2 A line reactor
3 Fans for the power section
4 A rectifier module
5 An inverter module
6 A dv/dt filter choke
7 An air outlet via a metal cover with protection against water splashes on the enclosure roof
8 An air outlet (without filter mat) with fans for the control section

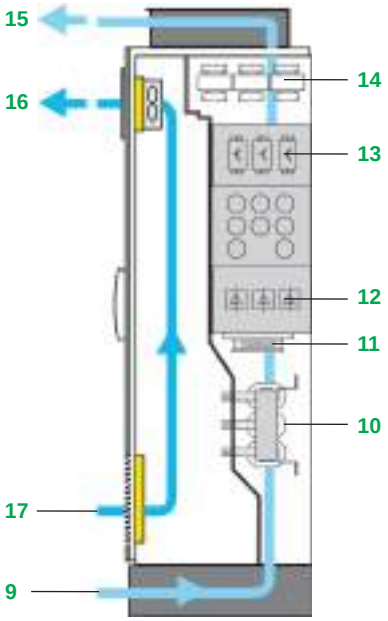

IP54 enclosure

Increased IP54 protection rating

With increased IP54 protection with separate channels, the cooling air intake comes from the floor and goes out through the enclosure roof.

The control section is cooled by filter fans located in the enclosure door.

The incoming air temperature must be between 0 °C/*32 °F* and 40 °C/*104 °F* (-10 °C/*14 °F* with enclosure heating) and can reach 50 °C/*122 °F* with derating (class 3K3 according to IEC/EN 60721-3-3).

IP54 enclosures comprise:
9 An air intake for the power section via the enclosure plinth
10 A line reactor
11 Fans for the power section
12 A rectifier module
13 An inverter module
14 A dv/dt filter choke
15 An air outlet via a metal cover with protection against water splashes on the enclosure roof
16 An air outlet (with filter mat) with fans for the control section
17 An air intake grid (with filter mat) for the control section

Variable speed drives
Altivar Process ATV600
Compact Drive Systems

Additional enclosure allowing cabling from the bottom

Modular offer

This consists of:
- The standard compact offer
- One or more options (see pages 4/16 to 4/19)

Options (CTO)

Some of these options depend on the drive rating. They can be integrated without any need for modifications to the enclosure:
- Increased IP54 protection rating
- Enclosure plinth for basic device
- Additional enclosure allowing cabling from the top or from the bottom
- Enclosure lighting and heating
- "Local/remote" key switch
- Ethernet port on front door
- Extended I/O modules and extended relay modules
- Communication modules for various fieldbus systems
- STO - SIL 3 Stop category 0 or 1 Emergency stop
- Front display module (FDM)
- Indicator lights on front door
- Motor/bearing temperature monitoring
- dv/dt filters for long motor cables
- Motor heating
- Circuit breaker
- Undervoltage coil for circuit breaker
- Motor for circuit breaker
- Automated mains disconnect
- Setting for 415 V + 10%
- Safety information labels in the local language
- Design for IT systems
- Seaworthy packaging

Further design variations (ETO)

These adaptations depend on the drive rating. Some may lead to modification of the size of the enclosure:
- Modified wiring colors
- Remote monitoring
- Different ranges of supply voltages
- Multipulse supply (12-pulse)
- Design without a main switch
- Increased short-circuit strength up to 100 kA
- Air intake from the back
- Other enclosure colors
- Customized documentation and labeling
- Motor contactor
- Etc.

Configure your drive system with the
Altivar Process Configurator Tool
altivar-process-configurator.schneider-electric.com

Variable speed drives

Altivar Process ATV600
Compact Drive Systems
Three-phase supply voltage: 380...415 V 50/60 Hz

ATV660C16Q4X1

380...415 V IP23 Compact Drive Systems

Motor		Line supply			Altivar Process			
Power indicated on rating plate (1)		Line current (2) 400 V	Apparent power 400 V	Max. prospective line Isc	Max. continuous current (1)	Max. transient current for 60 s	Reference (1)	Weight
ND:	Normal duty (3)							
HD:	*Heavy duty (4)*							
	kW	A	kVA	kA	A	A		kg/ *lb*
THDi ≤ 44% at 100% load								
ND	110	195	135	50	211	232	ATV660C11Q4X1	300/ *661*
HD	*90*	*164*	*113*	*50*	*173*	*260*		
ND	132	232	161	50	250	275	ATV660C13Q4X1	300/ *661*
HD	*110*	*197*	*136*	*50*	*211*	*317*		
ND	160	277	192	50	302	332	ATV660C16Q4X1	300/ *661*
HD	*132*	*232*	*161*	*50*	*250*	*375*		
ND	200	349	242	50	370	407	ATV660C20Q4X1	400/ *881*
HD	*160*	*286*	*198*	*50*	*302*	*453*		
ND	250	432	299	50	477	525	ATV660C25Q4X1	400/ *881*
HD	*200*	*353*	*244*	*50*	*370*	*555*		
ND	315	538	373	50	590	649	ATV660C31Q4X1	400/ *881*
HD	*250*	*432*	*299*	*50*	*477*	*716*		
ND	355	611	423	50	660	726	ATV660C35Q4X1	650/ *1,433*
HD	*280*	*489*	*339*	*50*	*520*	*780*		
ND	400	681	472	50	730	803	ATV660C40Q4X1	650/ *1,433*
HD	*315*	*545*	*378*	*50*	*590*	*885*		
ND	450	764	529	50	830	913	ATV660C45Q4X1	650/ *1,433*
HD	*355*	*611*	*423*	*50*	*660*	*990*		
ND	500	846	586	50	900	990	ATV660C50Q4X1	650/ *1,433*
HD	*400*	*681*	*472*	*50*	*730*	*1095*		
ND	560	948	656	50	1020	1122	ATV660C56Q4X1	850/ *1,873*
HD	*450*	*767*	*531*	*50*	*830*	*1245*		
ND	630	1058	733	50	1140	1254	ATV660C63Q4X1	850/ *1,873*
HD	*500*	*849*	*588*	*50*	*900*	*1350*		
ND	710	1192	826	50	1260	1386	ATV660C71Q4X1	1,100/ *2,425*
HD	*560*	*951*	*659*	*50*	*1020*	*1530*		
ND	800	1335	925	50	1420	1562	ATV660C80Q4X1	1,100/ *2,425*
HD	*630*	*1061*	*735*	*50*	*1140*	*1710*		

(1) These values are given for a nominal switching frequency of 2.5 kHz for use in continuous operation.
The switching frequency is adjustable from 2…8 kHz for all ratings.
Above 2.5 kHz, the drive will automatically reduce the switching frequency in the event of an excessive temperature rise. For continuous operation above the nominal switching frequency, derate the nominal drive current (see the derating curves in the Handbook).
(2) Typical value for the indicated motor power and for the maximum prospective line Isc.
(3) Values given for applications requiring a slight overload (up to 110%).
(4) Values given for applications requiring a significant overload (up to 150%).

***Note**: Consult the CTO options tables of possible combinations with the drives (see page 4/16).*

Variable speed drives

Altivar Process ATV600
Compact Drive Systems
Three-phase supply voltage: 480 V 50/60 Hz

ATV660C25T4X1

480 V IP23 Compact Drive Systems

Motor		Line supply			Altivar Process			
Power indicated on rating plate (1)		Line current (2) 480 V	Apparent power 480 V	Max. prospective line Isc	Max. continuous current (1)	Max. transient current for 60 s	Reference (1)	Weight
ND:	Normal duty (3)							
HD:	*Heavy duty (4)*							
	kW	A	kVA	kA	A	A		kg/ *lb*
THDi ≤ 44% at 100% load								
ND	132	196	163	50	211	232	ATV660C11T4X1	300/ *661*
HD	*110*	*168*	*139*	*50*	*173*	*260*		
ND	160	233	194	50	250	275	ATV660C13T4X1	300/ *661*
HD	*132*	*198*	*164*	*50*	*211*	*317*		
ND	180	258	194	50	302	332	ATV660C16T4X1	300/ *661*
HD	*160*	*233*	*215*	*50*	*250*	*375*		
ND	220	320	266	50	370	407	ATV660C20T4X1	400/ *881*
HD	*180*	*267*	*222*	*50*	*302*	*453*		
ND	280	400	333	50	477	525	ATV660C25T4X1	400/ *881*
HD	*220*	*323*	*268*	*50*	*370*	*555*		
ND	355	503	418	50	590	649	ATV660C31T4X1	400/ *881*
HD	*280*	*400*	*333*	*50*	*477*	*716*		
ND	400	572	475	50	660	726	ATV660C35T4X1	650/ *1,433*
HD	*315*	*456*	*379*	*50*	*520*	*780*		
ND	450	637	530	50	730	803	ATV660C40T4X1	650/ *1,433*
HD	*355*	*510*	*424*	*50*	*590*	*885*		
ND	500	706	587	50	830	913	ATV660C45T4X1	650/ *1,433*
HD	*400*	*572*	*475*	*50*	*660*	*990*		
ND	560	789	656	50	900	990	ATV660C50T4X1	650/ *1,433*
HD	*450*	*637*	*530*	*50*	*730*	*1095*		
ND	630	888	739	50	1020	1122	ATV660C56T4X1	850/ *1,873*
HD	*500*	*711*	*591*	*50*	*830*	*1245*		
ND	710	993	826	50	1140	1254	ATV660C63T4X1	850/ *1,873*
HD	*560*	*794*	*660*	*50*	*900*	*1350*		
ND	800	1119	931	50	1260	1386	ATV660C71T4X1	1,100/ *2,425*
HD	*630*	*893*	*742*	*50*	*1020*	*1530*		
ND	900	1257	1045	50	1420	1562	ATV660C80T4X1	1,100/ *2,425*
HD	*710*	*997*	*828*	*50*	*1140*	*1710*		

(1) These values are given for a nominal switching frequency of 2.5 kHz for use in continuous operation.
The switching frequency is adjustable from 2…8 kHz for all ratings.
Above 2.5 kHz, the drive will automatically reduce the switching frequency in the event of an excessive temperature rise. For continuous operation above the nominal switching frequency, derate the nominal drive current (see the derating curves in the Handbook).
(2) Typical value for the indicated motor power and for the maximum prospective line Isc.
(3) Values given for applications requiring a slight overload (up to 110%).
(4) Values given for applications requiring a significant overload (up to 150%).

***Note**: Consult the CTO options tables of possible combinations with the drives (see page 4/16).*

4

Variable speed drives
Altivar Process ATV600
Low Harmonic Drive Systems

ATV680C16Q4X1

Presentation

Concept

ATV680 Low Harmonic Drive Systems are used when drives need to have particularly low mains harmonics.

In comparison with the traditional circuit structure of active mains rectifiers, the 3-level technology allows the switching frequency to be increased at the same time as the current load is reduced. This new technology reaches a total distortion factor (THDi) of around 2% and thus fulfills the requirements of IEEE 519 for a THDi < 5% in case of distorted mains. Additionally, the cosinus Phi is equal to 1 in each load situation (from 30 % Pn), helping to reduce the load on the mains.

The ATV680 range is an optimum solution for energy efficiency and process optimization.

The modular design makes it possible to adapt the enclosure unit to individual requirements. It simplifies planning and allows quick drive installation and commissioning.

Standard equipment

The Low Harmonic offer contains active infeed modules as well as frequency inverter modules, filter components, semiconductor fuses, a main switch, a dv/dt filter choke to limit overvoltage on the motor due to long cables, and spacious mains and motor bars for connecting the power cables.

The design is based on the ready-assembled Sarel “Spacial SF” enclosures with a graphic operating panel integrated in the enclosure door.

Inside the enclosure there is an easily accessible and spaciously designed control panel with the control components. Despite its compact dimensions, the enclosure has enough space for additional extensions and provides easy access for maintenance purposes.

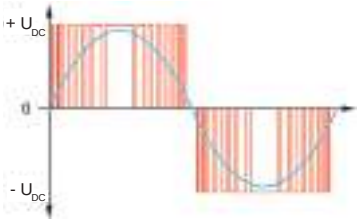

2-level technology

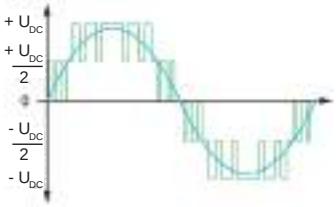

ATV680 with 3-level technology

Device features

Enhanced motor service life due to the 3-level concept

The 3-level technology of the active mains rectifier reduces the voltage load at the motor significantly, compared with other low harmonic frequency inverters. The fluctuating adaptation of the DC link voltage helps extend the motor service life.

Reduced losses due to the 3-level concept

In comparison with the traditional circuit structure of active mains rectifiers, the switching frequency is increased and the current load is reduced at the same time when using 3-level technology.

Compact dimensions due to the 3-level concept

A significant advantage of the 3-level technology is the reduced dimensions of the integrated filter components. Due to the increased switching frequency and its location inside the forced cooling air channel, the dimensions of the filter can be almost halved.

Protection ratings

The standard design of Altivar Process Low Harmonic Drive Systems complies with IP23 protection. This solution provides optimum cooling of the built-in frequency inverter modules and power components, as well as maximum compactness.

For operation in harsh ambient conditions, increased IP54 protection is available as an option. This solution consists of a clearly specified and tested cooling system with a separate cooling air channel, which provides excellent reliability.

About 90% of the heat losses are evacuated via the separate cooling air channel. The inside of the enclosure is cooled via fans located in the enclosure door.

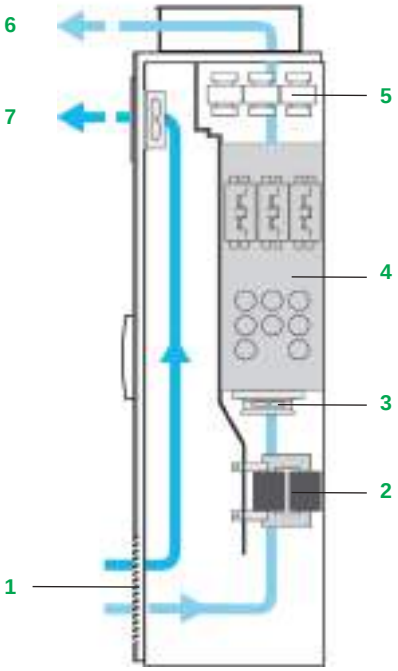

IP23 enclosure

Standard IP23 enclosure design

In order to avoid internal air short-circuits, the power sections of the components are located in the main cooling air channel.

The cooling air intake comes from a grid located in the bottom of the enclosure door. The internal fan, which is in a separate air channel, provides cooling of the power section. The air then comes out through the top of the enclosure.

The heat losses from the control section are evacuated by a fan in the enclosure door.

The incoming air temperature must be between 0 °C/*32 °F* and 40 °C/*104 °F* (-10 °C/*14 °F* with enclosure heating) and can reach 50 °C/*122 °F* with derating (class 3K3 according to IEC/EN 60721-3-3).

IP23 enclosures comprise:
1 An air intake (without filter mat) via a grid on the bottom of the enclosure door
2 Filter components
3 Fans for the power section
4 An active front end (AFE) module
5 A dv/dt filter choke
6 An air outlet via a metal cover with protection against water splashes on the enclosure roof
7 An air outlet (without filter mat) with fans for the control section

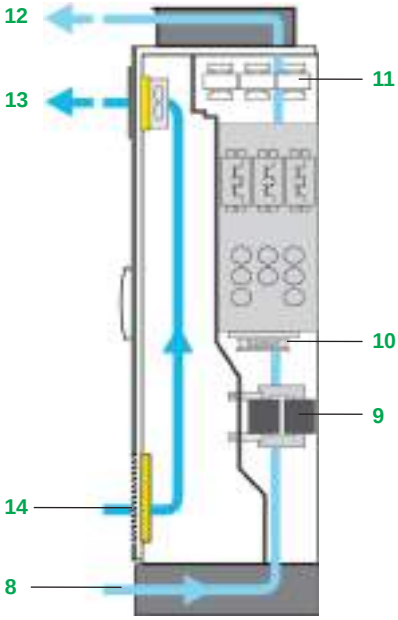

IP54 enclosure

Increased IP54 protection rating

With increased IP54 protection with separate channels, the cooling air intake comes from the floor and goes out through the enclosure roof.

The control section is cooled by filter fans located in the enclosure door.

The incoming air temperature must be between 0 °C/*32 °F* and 40 °C/*104 °F* (-10 °C/*14 °F* with enclosure heating) and can reach 50 °C/*122 °F* with derating (class 3K3 according to IEC/EN 60721-3-3).

IP54 enclosures comprise:
8 An air intake for the power section via the enclosure plinth
9 Filter components
10 Fans for the power section
11 A dv/dt filter choke
12 An air outlet via a metal cover with protection against water splashes on the enclosure roof
13 An air outlet (with filter mat) with fans for the control section
14 An air intake grid (with filter mat) for the control section

Variable speed drives
Altivar Process ATV600
Low Harmonic Drive Systems

Enclosure heating

Modular offer

This consists of:
- The Low Harmonic Drive offer
- One or more options (see pages 4/16 to 4/19)

Options (CTO)

Some of these options depend on the drive rating. They can be integrated without any need for modifications to the enclosure:
- Increased IP54 protection rating
- Enclosure plinth for basic device
- Additional enclosure allowing cabling from the top or from the bottom
- Enclosure lighting and heating
- "Local/remote" key switch
- Ethernet port on front door
- Extended I/O modules and extended relay modules
- Communication modules for various fieldbus systems
- STO - SIL 3 Stop category 0 or 1 Emergency stop
- Front display module (FDM)
- Indicator lights on front door
- Motor/bearing temperature monitoring
- dv/dt filters for long motor cables
- Motor heating
- Circuit breaker
- Undervoltage coil for circuit breaker
- Motor for circuit breaker
- Automated mains disconnect
- Setting for 415 V + 10%
- Design for IT systems
- Seaworthy packaging

Further design variations (ETO)

These adaptations depend on the drive rating. Some will lead to modification of the size of the enclosure:
- Modified wiring colors
- Remote monitoring
- Different ranges of supply voltages
- Design without a main switch
- Increased short-circuit strength up to 100 kA
- Air intake from the back
- Other enclosure colors
- Customized documentation and labeling
- Motor contactor
- Etc.

Configure your drive system with the
Altivar Process Configurator Tool
altivar-process-configurator.se.com

Variable speed drives

Altivar Process ATV600
Low Harmonic Drive Systems
Three-phase supply voltage: 380...415 V 50/60 Hz

ATV680C16Q4X1

380...415 V IP23 Low Harmonic Drive Systems

Motor		Line supply			Altivar Process			
Power indicated on rating plate (1)		Line current (2)	Apparent power	Max. prospective line Isc	Max. continuous current (1)	Max. transient current for 60 s	Reference (1)	Weight
		400 V	400 V					
ND:	Normal duty (3)							
HD:	*Heavy duty (4)*							
	kW	A	kVA	kA	A	A		kg/ *lb*
THDi ≤ 5% at 100% load								
ND	110	175	121	50	211	232	ATV680C11Q4X1	400/ *881*
HD	*90*	*144*	*100*	*50*	*173*	*260*		
ND	132	208	144	50	250	275	ATV680C13Q4X1	400/ *881*
HD	*110*	*174*	*121*	*50*	*211*	*317*		
ND	160	252	174	50	302	332	ATV680C16Q4X1	400/ *881*
HD	*132*	*208*	*144*	*50*	*250*	*375*		
ND	200	313	217	50	370	407	ATV680C20Q4X1	700/ *1,543*
HD	*160*	*252*	*174*	*50*	*302*	*453*		
ND	250	389	270	50	477	525	ATV680C25Q4X1	700/ *1,543*
HD	*200*	*313*	*217*	*50*	*370*	*555*		
ND	315	491	340	50	590	649	ATV680C31Q4X1	700/ *1,543*
HD	*250*	*389*	*270*	*50*	*477*	*716*		
ND	355	553	383	50	660	726	ATV680C35Q4X1	1,150/ *2,535*
HD	*280*	*436*	*302*	*50*	*520*	*780*		
ND	400	620	429	50	730	803	ATV680C40Q4X1	1,150/ *2,535*
HD	*315*	*491*	*340*	*50*	*590*	*885*		
ND	450	697	483	50	830	913	ATV680C45Q4X1	1,150/ *2,535*
HD	*355*	*553*	*383*	*50*	*660*	*990*		
ND	500	775	537	50	900	990	ATV680C50Q4X1	1,150/ *2,535*
HD	*400*	*620*	*429*	*50*	*730*	*1095*		
ND	560	868	601	50	1020	1122	ATV680C56Q4X1	1,450/ *3,196*
HD	*450*	*697*	*483*	*50*	*830*	*1245*		
ND	630	971	673	50	1140	1254	ATV680C63Q4X1	1,450/ *3,196*
HD	*500*	*775*	*537*	*50*	*900*	*1350*		
ND	710	1094	758	50	1260	1386	ATV680C71Q4X1	1,950/ *4,299*
HD	*560*	*868*	*601*	*50*	*1020*	*1530*		
ND	800	1227	850	50	1420	1562	ATV680C80Q4X1	1,950/ *4,299*
HD	*630*	*971*	*673*	*50*	*1140*	*1710*		

(1) These values are given for a nominal switching frequency of 2.5 kHz for use in continuous operation.
The switching frequency is adjustable from 2…8 kHz for all ratings.
Above 2.5 kHz, the drive will automatically reduce the switching frequency in the event of an excessive temperature rise. For continuous operation above the nominal switching frequency, derate the nominal drive current (see the derating curves in the Handbook).
(2) Typical value for the indicated motor power and for the maximum prospective line Isc.
(3) Values given for applications requiring a slight overload (up to 110%).
(4) Values given for applications requiring a significant overload (up to 150%).

***Note**: Consult the CTO options tables of possible combinations with the drives (see page 4/16).*

Variable speed drives

Altivar Process ATV600
Low Harmonic Drive Systems
Three-phase supply voltage: 480 V 50/60 Hz

ATV680C31T4X1

480 V IP23 Low Harmonic Drive Systems

Motor		Line supply			Altivar Process			
Power indicated on rating plate (1)		Line current (2)	Apparent power	Max. prospective line Isc	Max. continuous current (1)	Max. transient current for 60 s	Reference (1)	Weight
		480 V	480 V					
ND:	Normal duty (3)							
HD:	*Heavy duty (4)*							
	kW	A	kVA	kA	A	A		kg/ *lb*
THDi ≤ 5% at 100% load								
ND	132	175	145	50	211	232	ATV680C11T4X1	400/ *881*
HD	*110*	*147*	*123*	*50*	*173*	*260*		
ND	160	211	175	50	250	275	ATV680C13T4X1	400/ *881*
HD	*132*	*175*	*145*	*50*	*211*	*317*		
ND	180	236	196	50	302	332	ATV680C16T4X1	400/ *881*
HD	*160*	*211*	*175*	*50*	*250*	*375*		
ND	220	287	239	50	370	407	ATV680C20T4X1	700/ *1,543*
HD	*180*	*236*	*196*	*50*	*302*	*453*		
ND	280	363	302	50	477	525	ATV680C25T4X1	700/ *1,543*
HD	*220*	*287*	*239*	*50*	*370*	*555*		
ND	355	461	383	50	590	649	ATV680C31T4X1	700/ *1,543*
HD	*280*	*363*	*302*	*50*	*477*	*716*		
ND	400	519	432	50	660	726	ATV680C35T4X1	1,150/ *2,535*
HD	*315*	*409*	*340*	*50*	*520*	*780*		
ND	450	581	483	50	730	803	ATV680C40T4X1	1,150/ *2,535*
HD	*355*	*461*	*383*	*50*	*590*	*885*		
ND	500	646	537	50	830	913	ATV680C45T4X1	1,150/ *2,535*
HD	*400*	*519*	*432*	*50*	*660*	*990*		
ND	560	723	601	50	900	990	ATV680C50T4X1	1,150/ *2,535*
HD	*450*	*581*	*483*	*50*	*730*	*1095*		
ND	630	813	676	50	1020	1122	ATV680C56T4X1	1,450/ *3,196*
HD	*500*	*646*	*537*	*50*	*830*	*1245*		
ND	710	912	758	50	1140	1254	ATV680C63T4X1	1,450/ *3,196*
HD	*560*	*723*	*601*	*50*	*900*	*1350*		
ND	800	1028	854	50	1260	1386	ATV680C71T4X1	1,950/ *4,299*
HD	*630*	*813*	*676*	*50*	*1020*	*1530*		
ND	900	1150	956	50	1420	1562	ATV680C80T4X1	1,950/ *4,299*
HD	*710*	*912*	*758*	*50*	*1140*	*1710*		

(1) These values are given for a nominal switching frequency of 2.5 kHz for use in continuous operation.
The switching frequency is adjustable from 2…8 kHz for all ratings.
Above 2.5 kHz, the drive will automatically reduce the switching frequency in the event of an excessive temperature rise. For continuous operation above the nominal switching frequency, derate the nominal drive current (see the derating curves in the Handbook).
(2) Typical value for the indicated motor power and for the maximum prospective line Isc.
(3) Values given for applications requiring a slight overload (up to 110%).
(4) Values given for applications requiring a significant overload (up to 150%).

***Note**: Consult the CTO options tables of possible combinations with the drives (see page 4/16).*

4

Variable speed drives
Altivar Process ATV600
Drive Systems
Common CTO options

VW3AP1601

Common options *(1)*		
Description	**Reference**	**Weight kg/*lb***
Enclosure options		
Enclosure lighting *(2)*	VW3AP1601	0.500/ *1.102*
Control options		
"Local/remote" key switch	VW3AP1801	0.200/ *0.441*
Ethernet port on front door	VW3AP1807	0.200/ *0.441*
Additional I/O modules		
Extended I/O module	VW3AP3203	0.200/ *0.441*
Extended relay module	VW3AP3204	0.200/ *0.441*
Communication modules		
Profibus DP communication module	VW3AP3607	0.200/ *0.441*
CANopen Daisy Chain communication module	VW3AP3608	0.200/ *0.441*
DeviceNet communication module	VW3AP3609	0.200/ *0.441*
CANopen SUB-D9 communication module	VW3AP3618	0.200/ *0.441*
CANopen communication module with screw terminals	VW3AP3628	0.200/ *0.441*
PROFINET communication module	VW3AP3627	0.200/ *0.441*
Modbus TCP and EtherNet/IP communication module	VW3AP3720	0.200/ *0.441*
Communication Card Ethernet/IP, Modbus TCP, MultiDrive-Link	VW3AP3721	0.200/ *0.441*
Safety functions		
Emergency stop button (STO) with SIL 3 stop category 0	VW3AP1502	0.200/ *0.441*
Emergency stop button (STO) with SIL 3 stop category 1	VW3AP1503	0.500/ *1.102*
Display options		
Indicator lights on front door	VW3AP0421	0.200/ *0.441*
Motor options		
PTC relay for motor monitoring	VW3AP2001	0.200/ *0.441*
PTC relay with ATEX certification for motor monitoring *(3)*	VW3AP2002	0.200/ *0.441*
PT100/1000/KTY relay for motor monitoring	VW3AP2003	0.200/ *0.441*
PT100/1000/KTY relay for bearing monitoring	VW3AP2004	0.200/ *0.441*
Motor heating	VW3AP2101	0.300/ *0.661*
Line supply		
Setting for 415 V + 10%	VW3AP0415	–
Ready for IT systems	VW3AP2701	–
Safety labels *(4)*		
English and German safety labels	VW3AP0561	–
English and Italian safety labels	VW3AP0562	–
English and Spanish safety labels	VW3AP0563	–
English and Dutch safety labels	VW3AP0564	–
English and Chinese safety labels	VW3AP0565	–
English and Russian safety labels	VW3AP0566	–
English and Turkish safety labels	VW3AP0567	–
English and Polish safety labels	VW3AP0568	–
English and Portuguese safety labels	VW3AP0569	–

VW3AP1502

Safety label

(1) These options cannot be ordered alone. For any other configuration, please consult our Customer Care Teams.
(2) Not available for ATV660C11●4X1...C16●4X1 drives.
(3) To make an installation compliant with ATEX recommendations, please refer to the Installation Manual for each product.
(4) English and French as standard.

Variable speed drives

Altivar Process ATV600
Drive Systems
CTO options dependent on the drive rating

VW3AP0801

Options dependent on the drive rating (1)			
Description	**Corresponding enclosure (2)**	**Reference**	**Weight kg/lb**
Enclosure options			
Enclosure heating	ATV660C11●4X1...C16●4X1	VW3AP0501	1.500/ 3.307
	ATV660C20●4X1...C50●4X1	VW3AP0502	3.000/ 6.614
	ATV660C56●4X1...C80●4X1	VW3AP0503	4.500/ 9.921
	ATV680C11●4X1...C31●4X1	VW3AP0551	2.000/ 4.409
	ATV680C35●4X1...C80●4X1	VW3AP0552	3.000/ 6.614
Increased IP54 protection	ATV660C11●4X1...C16●4X1	VW3AP0301	13.000/ 28.660
	ATV660C20●4X1...C31●4X1	VW3AP0302	16.000/ 35.274
	ATV660C35●4X1...C50●4X1	VW3AP0303	19.000/ 41.888
	ATV660C56●4X1...C63●4X1	VW3AP0304	32.000/ 70.548
	ATV660C71●4X1...C80●4X1	VW3AP0305	35.000/ 77.162
	ATV680C11●4X1...C16●4X1	VW3AP0351	16.000/ 35.274
	ATV680C20●4X1...C31●4X1	VW3AP0352	29.000/ 63.934
	ATV680C35●4X1...C50●4X1	VW3AP0353	45.000/ 99.208
	ATV680C56●4X1...C63●4X1	VW3AP0354	58.000/ 127.668
	ATV680C71●4X1...C80●4X1	VW3AP0355	74.000/ 163.142
Enclosure plinth for basic device	ATV660C11●4X1...C16●4X1	VW3AP0801	9.000/ 19.842
	ATV660C20●4X1...C31●4X1	VW3AP0802	11.000/ 24.251
	ATV660C35●4X1...C50●4X1	VW3AP0803	13.000/ 28.660
	ATV660C56●4X1...C63●4X1	VW3AP0804	22.000/ 48.502
	ATV660C71●4X1...C80●4X1	VW3AP0805	24.000/ 52.911
	ATV680C11●4X1...C16●4X1	VW3AP0851	11.000/ 24.251
	ATV680C20●4X1...C31●4X1	VW3AP0852	20.000/ 44.093
	ATV680C35●4X1...C50●4X1	VW3AP0853	31.000/ 68.343
	ATV680C56●4X1...C63●4X1	VW3AP0854	40.000/ 88.185
	ATV680C71●4X1...C80●4X1	VW3AP0855	54.000/ 119.050

(1) These options cannot be ordered alone. For any other configuration, please consult our Customer Care Teams.
(2) Replace ● with Q for 380...415 V supply voltage or with T for 480 V supply voltage.

4

Variable speed drives

Altivar Process ATV600
Drive Systems
CTO options dependent on the drive rating

VW3AP0707

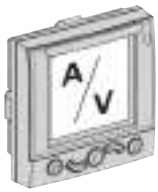

VW3AP0403

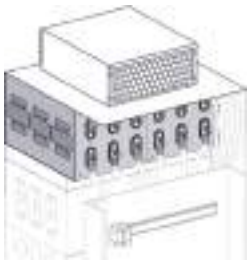

VW3AP0612

Options dependent on the drive rating (continued) *(1)*

Description	Corresponding enclosure *(2)*	Reference	Weight kg/*lb*
Enclosure options			
Additional enclosure allowing cabling from the top	ATV660C11●4X1...C31●4X1 ATV680C11●4X1...C31●4X1	VW3AP0701	85.000/ *187.393*
	ATV660C35●4X1...C80●4X1 ATV680C35●4X1...C80●4X1	VW3AP0702	100.000/ *220.462*
Additional enclosure allowing cabling from the top with plinth	ATV660C11●4X1...C31●4X1 ATV680C11●4X1...C31●4X1	VW3AP0704	94.000/ *207.234*
	ATV660C35●4X1...C80●4X1 ATV680C35●4X1...C80●4X1	VW3AP0705	111.000/ *244.713*
Additional enclosure allowing cabling from the bottom	ATV660C11●4X1...C31●4X1 ATV680C11●4X1...C31●4X1	VW3AP0707	85.000/ *187.393*
	ATV660C35●4X1...C80●4X1 ATV680C35●4X1...C80●4X1	VW3AP0708	100.000/ *220.462*
Additional enclosure allowing cabling from the bottom with plinth	ATV660C11●4X1...C31●4X1 ATV680C11●4X1...C31●4X1	VW3AP0710	94.000/ *207.234*
	ATV660C35●4X1...C80●4X1 ATV680C35●4X1...C80●4X1	VW3AP0711	111.000/ *244.713*
Display options			
Front display module (FDM)	ATV660C11●4X1...C13●4X1 ATV680C11●4X1...C13●4X1	VW3AP0401	0.500/ *1.102*
	ATV660C16●4X1...C20●4X1 ATV680C16●4X1...C20●4X1	VW3AP0402	0.500/ *1.102*
	ATV660C25●4X1...C31●4X1 ATV680C25●4X1...C31●4X1	VW3AP0403	0.500/ *1.102*
	ATV660C35●4X1...C50●4X1 ATV680C35●4X1...C50●4X1	VW3AP0404	0.500/ *1.102*
	ATV660C56●4X1...C80●4X1 ATV680C56●4X1...C80●4X1	VW3AP0405	0.500/ *1.102*
Motor options			
150 m dv/dt filter choke	ATV660C11●4X1...C16●4X1 ATV680C11●4X1...C16●4X1	VW3AP0601	25.000/ *55.116*
	ATV660C20●4X1...C31●4X1	VW3AP0602	50.000/ *110.231*
300 m dv/dt filter choke	ATV660C11●4X1...C16●4X1 ATV680C11●4X1...C16●4X1	VW3AP0611	28.000/ *61.729*
	ATV660C20●4X1...C31●4X1 ATV680C20●4X1...C31●4X1	VW3AP0612	56.000/ *123.459*
	ATV660C35●4X1...C50●4X1 ATV680C35●4X1...C50●4X1	VW3AP0613	84.000/ *185.188*
	ATV660C56●4X1...C63●4X1 ATV680C56●4X1...C63●4X1	VW3AP0614	112.000/ *246.918*
	ATV660C71●4X1...C80●4X1 ATV680C71●4X1...C80●4X1	VW3AP0615	140.000/ *308.647*

(1) These options cannot be ordered alone. For any other configuration, please consult our Customer Care Teams.
(2) Replace ● with Q for 380...415 V supply voltage or with T for 480 V supply voltage.

Variable speed drives

Altivar Process ATV600
Drive Systems
CTO options dependent on the drive rating

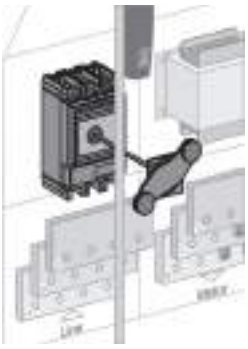

VW3AP0104

Options dependent on the drive rating (continued) *(1)*

Description	Corresponding enclosure *(2)*	Reference	Weight kg/*lb*
Line supply			
Circuit breaker	ATV660C11●4X1...C16●4X1 ATV680C11●4X1...C16●4X1	VW3AP0101	2.000/ *4.409*
	ATV660C20●4X1...C31●4X1 ATV680C20●4X1...C31●4X1	VW3AP0102	2.000/ *4.409*
	ATV660C35●4X1...C40●4X1 ATV680C35●4X1...C40●4X1	VW3AP0103	1.000/ *2.204*
	ATV660C45●4X1...C50●4X1 ATV680C45●4X1...C50●4X1	VW3AP0104	1.000/ *2.204*
	ATV660C56●4X1...C63●4X1 ATV680C56●4X1...C63●4X1	VW3AP0105	1.000/ *2.204*
	ATV660C71●4X1...C80●4X1 ATV680C71●4X1...C80●4X1	VW3AP0106	1.000/ *2.204*
Circuit breaker with MicroLogic	ATV660C11●4X1...C16●4X1 ATV680C11●4X1...C16●4X1	VW3AP0111	2.000/ *4.409*
	ATV660C20●4X1...C31●4X1 ATV680C20●4X1...C31●4X1	VW3AP0112	2.000/ *4.409*
	ATV660C35●4X1...C40●4X1 ATV680C35●4X1...C40●4X1	VW3AP0113	1.000/ *2.204*
	ATV660C45●4X1...C50●4X1 ATV680C45●4X1...C50●4X1	VW3AP0114	1.000/ *2.204*
	ATV660C56●4X1...C63●4X1 ATV680C56●4X1...C63●4X1	VW3AP0115	1.000/ *2.204*
	ATV660C71●4X1...C80●4X1 ATV680C71●4X1...C80●4X1	VW3AP0116	1.000/ *2.204*
Undervoltage coil for circuit breaker 230 V	ATV660C11●4X1...C31●4X1 ATV680C11●4X1...C31●4X1	VW3AP0201	0.100/ *0.220*
	ATV660C35●4X1...C80●4X1 ATV680C35●4X1...C80●4X1	VW3AP0202	0.100/ *0.220*
Motor for circuit breaker 230 V	ATV660C11●4X1...C31●4X1 ATV680C11●4X1...C31●4X1	VW3AP0251	4.000/ *8.818*
	ATV660C35●4X1...C40●4X1 ATV680C35●4X1...C40●4X1	VW3AP0252	4.000/ *8.818*
	ATV660C45●4X1...C50●4X1 ATV680C45●4X1...C50●4X1	VW3AP0253	7.000/ *15.432*
	ATV660C56●4X1...C63●4X1 ATV680C56●4X1...C63●4X1	VW3AP0254	7.000/ *15.432*
	ATV660C71●4X1...C80●4X1 ATV680C71●4X1...C80●4X1	VW3AP0255	7.000/ *15.432*
Automated mains disconnect	ATV660C11●4X1...C16●4X1	VW3AP0271	0.500/ *1.102*
	ATV660C20●4X1...C31●4X1	VW3AP0272	0.500/ *1.102*
	ATV660C35●4X1...C40●4X1	VW3AP0273	0.500/ *1.102*
	ATV660C45●4X1...C50●4X1	VW3AP0274	0.500/ *1.102*
	ATV660C56●4X1...C63●4X1	VW3AP0275	0.500/ *1.102*
	ATV660C71●4X1...C80●4X1	VW3AP0276	0.500/ *1.102*
Packaging			
Seaworthy packaging	ATV660C11●4X1...C16●4X1	VW3AP0811	105/ *231*
	ATV660C20●4X1...C31●4X1	VW3AP0812	124/ *273*
	ATV660C35●4X1...C50●4X1	VW3AP0813	138/ *304*
	ATV660C56●4X1...C63●4X1	VW3AP0815	192/ *423*
	ATV660C71●4X1...C80●4X1	VW3AP0816	205/ *451*
	ATV680C11●4X1...C16●4X1	VW3AP0812	124/ *273*
	ATV680C20●4X1...C31●4X1	VW3AP0814	155/ *341*
	ATV680C35●4X1...C50●4X1	VW3AP0817	225/ *496*
	ATV680C56●4X1...C63●4X1	VW3AP0819	255/ *562*
	ATV680C71●4X1...C80●4X1	VW3AP0821	352/ *776*

(1) These options cannot be ordered alone. For any other configuration, please consult our Customer Care Teams.
(2) Replace ● with Q for 380...415 V supply voltage or with T for 480 V supply voltage.

Variable speed drives

Altivar Process ATV600

IP23 Drive Systems: 380...415 V

380...415 V Compact IP23 Drive Systems		
Overall dimensions		
Reference	**W x H x D** *(1)*	
	mm	***in.***
ATV660C11Q4X1	400 x 2,150 x 664	*15.75 x 84.65 x 26.14*
ATV660C13Q4X1	400 x 2,150 x 664	*15.75 x 84.65 x 26.14*
ATV660C16Q4X1	400 x 2,150 x 664	*15.75 x 84.65 x 26.14*
ATV660C20Q4X1	600 x 2,150 x 664	*23.62 x 84.65 x 26.14*
ATV660C25Q4X1	600 x 2,150 x 664	*23.62 x 84.65 x 26.14*
ATV660C31Q4X1	600 x 2,150 x 664	*23.62 x 84.65 x 26.14*
ATV660C35Q4X1	800 x 2,150 x 664	*31.50 x 84.65 x 26.14*
ATV660C40Q4X1	800 x 2,150 x 664	*31.50 x 84.65 x 26.14*
ATV660C45Q4X1	800 x 2,150 x 664	*31.50 x 84.65 x 26.14*
ATV660C50Q4X1	800 x 2,150 x 664	*31.50 x 84.65 x 26.14*
ATV660C56Q4X1	1,200 x 2,150 x 664	*47.24 x 84.65 x 26.14*
ATV660C63Q4X1	1,200 x 2,150 x 664	*47.24 x 84.65 x 26.14*
ATV660C71Q4X1	1,400 x 2,150 x 664	*55.12 x 84.65 x 26.14*
ATV660C80Q4X1	1,400 x 2,150 x 664	*55.12 x 84.65 x 26.14*

(1) The total depth includes a door handle of 64 mm/2.54 in. The dimensions can differ depending on the chosen options. For further information, please consult our Customer Care Teams.

Variable speed drives

Altivar Process ATV600

IP23 Drive Systems: 380...415 V

PF151222A

380...415 V Low Harmonic IP23 Drive Systems		
Overall dimensions		
Reference	**W x H x D** *(1)*	
	mm	***in.***
ATV680C11Q4X1	600 x 2,150 x 664	*23.62 x 84.65 x 26.14*
ATV680C13Q4X1	600 x 2,150 x 664	*23.62 x 84.65 x 26.14*
ATV680C16Q4X1	600 x 2,150 x 664	*23.62 x 84.65 x 26.14*
ATV680C20Q4X1	1,000 x 2,150 x 664	*39.37 x 84.65 x 23.62*
ATV680C25Q4X1	1,000 x 2,150 x 664	*39.37 x 84.65 x 26.14*
ATV680C31Q4X1	1,000 x 2,150 x 664	*39.37 x 84.65 x 26.14*
ATV680C35Q4X1	1,600 x 2,150 x 664	*62.99 x 84.65 x 26.14*
ATV680C40Q4X1	1,600 x 2,150 x 664	*62.99 x 84.65 x 26.14*
ATV680C45Q4X1	1,600 x 2,150 x 664	*62.99 x 84.65 x 26.14*
ATV680C50Q4X1	1,600 x 2,150 x 664	*62.99 x 84.65 x 26.14*
ATV680C56Q4X1	2,000 x 2,150 x 664	*78.74 x 84.65 x 26.14*
ATV680C63Q4X1	2,000 x 2,150 x 664	*78.74 x 84.65 x 26.14*
ATV680C71Q4X1	2,600 x 2,150 x 664	*102.36 x 84.65 x 26.14*
ATV680C80Q4X1	2,600 x 2,150 x 664	*102.36 x 84.65 x 26.14*

(1) The total depth includes a door handle of 64 mm/2.54 in. The dimensions can differ depending on the chosen options. For further information, please consult our Customer Care Teams.

Contents

5 - Drives Field Services, index

Drives Field Services

- **A whole world of services for your drives**..... *page 5/2*

Index

- **Product reference index**..... *page 5/4*

5

Variable speed drives

Altivar Process

A whole world of services for your drives by Schneider Electric

Drives support and services offer by Schneider Electric

Variable speed drives are an important part of your operation, with downtime having a significant impact on your business. Protecting that investment through comprehensive drive services means that you can continue to deliver optimally throughout the lifecycle of your drive. Our range of services is designed to help you get more out of your drives, your operation, and to improve your environmental impact.

5

Install

- **Extended Warranty** service helps you control your maintenance costs. Schneider Electric will provide a replacement drive or repair the drive on site during a period of 1 or 3 years more than the standard warranty, in all conditions covered by the extended warranty.
- **Start-up** service is the first essential step in maintenance and optimal operational performance of the drive. Our comprehensive review checks up to 100 parameters and is especially designed for drives in simple applications.
- **Commissioning** service helps to ensure a reliable start for operations with more complex applications and drive systems. The unique requirements of your process need to be carefully considered to ensure efficient operations.

Operate

- **Preventive Maintenance** service performs predetermined maintenance actions according to a drive product-specific schedule. The work is carried out by certified technical experts following Schneider Electric instructions. This service minimizes unplanned downtime and extends your equipment lifetime.
- **Remote Technical Support** brings you expert product assistance over phone, email, chat, or Web for any technical questions relating to your drives, including configuration, diagnostics, and maintenance. Our global support team is multi-lingual with support available up to R&D level experts if needed.
- **On-Site Expert Assistance** service offers you highly skilled field service experts to troubleshoot and resolve drive equipment-related matters at your site, as a back-up source of expertise for your personnel.
- **Spare Part Management** service identifies and manages your critical spare parts either on your site or offsite. This service ensures that you have access to the spares you need without you having to invest in capital to maintain the stock.

(1) Services available in countries that have the right structure and capabilities.

Variable speed drives

Altivar Process

A whole world of services for your drives by Schneider Electric

Drives support and services offer by Schneider Electric (continued)

Optimize

- **Training** service offers eLearning, classroom, and onsite training provision to enhance the technical installation, commissioning, and maintenance competencies of your personnel. Added competence translates into further process efficiency and reliability, as well as employee satisfaction.

- **EcoStruxure Asset Advisor** service enables you to move from reactive to predictive maintenance and access actionable insight provided by the advisor. The service predicts drive- and motor-related actions through connected devices and advanced algorithms monitored by Schneider Electric's experts.

Renew

- **Drive Revitalization** is an excellent choice if you prefer to use your aging drives longer and want to extend their service life with affordable and comprehensive inspection and replacement of all critical parts.

- **Drive Replacement** involves modernizing equipment by replacing the previous aged or obsolete drive with a new one matched to the purpose. The service can be extended with engineering in case the device and process requires more advanced engineering.

Circular economy with drives

- **Spare Parts** are available from our local, regional, and global stocks. Original equipment parts from Schneider Electric are reliable and easily available. They will help to keep your drive in operation for longer.

- **Repair** allows you to extend the life of your drive. The affected drive can be replaced, or repaired on site or at our repair centers, depending on the type of drive in question.

- **Fast exchange by refurbished drive** *(1)* gives a second life to inoperative drives. In this case, we offer an immediate exchange with a replacement refurbished drive and take back the product, repair it, and keep it ready for the next exchange..

- **Take-back and recycling** *(1)* is the last step to improve your environmental impact. Unrepairable products are dismantled, and raw materials are collected and given a second life. Up to 85% of the product components can be recycled.

Service contracts secure recovery, availability and outcome

Service contracts manage the safety and performance of your assets through well-defined maintenance plans tailored to your operational needs. The predefined service contract – Advantage Service Plan – and fully customizable "à la carte" service contract are built from services in the "Operate" and "Optimize" phases and service levels defining availability, response, and lead times matching your particular needs. You will enjoy priority access to Schneider Electric support when you need it, as well as having an expert partner to plan the long-term evolution of your drives.

mySchneider app

With the mySchneider app you have easy 24/7 access to product information and expert support. All registered users have access to additional features, such as real-time notifications, order tracking, product pricing, and availability. The mySchneider app is available for download from the IOS and Android app store.

Schneider Electric – helping you succeed

Schneider Electric, the leader in digital transformation of energy management and automation, has operations in more than 100 countries. With this global footprint we have certified drives field service representatives, regional expert and advanced level support up to product R&D to provide you the right support across the lifecycle of your drives. Furthermore, we offer an extensive network of local and global repair centers and a logistics chain that underpins our ability to respond to your needs.

To order services or find out more, please contact your local Schneider Electric service center.

(1) Services available in countries that have the right structure and capabilities.

Variable speed drives

Altivar Process ATV600

Product reference index

#

490NTC00005 2/27 2/28
490NTC00015 2/27 2/28
490NTW00002 2/27 2/28
490NTW00002U 2/27 2/28
490NTW00005 2/27 2/28
490NTW00005U 2/27 2/28
490NTW00012 2/27 2/28
490NTW00012U 2/27 2/28

A

ATV630C11N4 2/6
ATV630C11N4F 2/10
ATV630C13N4 2/6
ATV630C13N4F 2/10
ATV630C16N4 2/6
ATV630C16N4F 2/10
ATV630C20N4F 2/10
ATV630C22N4 2/6
ATV630C25N4 2/6
ATV630C25N4F 2/10
ATV630C31N4 2/6
ATV630C31N4F 2/10
ATV630D11M3 2/4
ATV630D11N4 2/5
ATV630D11N4Z 3/6
ATV630D11N4ZU 3/6
ATV630D11Y6 2/9
ATV630D15M3 2/4
ATV630D15N4 2/5
ATV630D15N4Z 3/6
ATV630D15N4ZU 3/6
ATV630D15Y6 2/9
ATV630D18M3 2/4
ATV630D18N4 2/5
ATV630D18N4Z 3/6
ATV630D18N4ZU 3/6
ATV630D18Y6 2/9
ATV630D22M3 2/4
ATV630D22N4 2/5
ATV630D22N4Z 3/6
ATV630D22N4ZU 3/6
ATV630D22Y6 2/9
ATV630D30M3 2/4
ATV630D30N4 2/5
ATV630D30N4Z 3/7
ATV630D30N4ZU 3/7
ATV630D30Y6 2/9
ATV630D37M3 2/4
ATV630D37N4 2/5
ATV630D37N4Z 3/7
ATV630D37N4ZU 3/7
ATV630D37Y6 2/9
ATV630D45M3 2/4
ATV630D45N4 2/5
ATV630D45N4Z 3/7
ATV630D45N4ZU 3/7
ATV630D45Y6 2/9
ATV630D55M3 2/4
ATV630D55N4 2/6
ATV630D55N4Z 3/7
ATV630D55N4ZU 3/7
ATV630D55Y6 2/9
ATV630D75M3 2/4
ATV630D75N4 2/6
ATV630D75N4Z 3/7
ATV630D75N4ZU 3/7
ATV630D75Y6 2/9
ATV630D90N4 2/6
ATV630D90N4Z 3/7
ATV630D90N4ZU 3/7
ATV630D90Y6 2/9
ATV630U07M3 2/4
ATV630U07N4 2/5
ATV630U07N4Z 3/6
ATV630U07N4ZU 3/6
ATV630U15M3 2/4
ATV630U15N4 2/5
ATV630U15N4Z 3/6
ATV630U15N4ZU 3/6
ATV630U22M3 2/4
ATV630U22N4 2/5
ATV630U22N4Z 3/6
ATV630U22N4ZU 3/6
ATV630U22Y6 2/9
ATV630U30M3 2/4
ATV630U30N4 2/5
ATV630U30N4Z 3/6
ATV630U30N4ZU 3/6
ATV630U30Y6 2/9
ATV630U40M3 2/4
ATV630U40N4 2/5
ATV630U40N4Z 3/6
ATV630U40N4ZU 3/6
ATV630U40Y6 2/9
ATV630U55M3 2/4
ATV630U55N4 2/5
ATV630U55N4Z 3/6
ATV630U55N4ZU 3/6
ATV630U55Y6 2/9
ATV630U75M3 2/4
ATV630U75N4 2/5
ATV630U75N4Z 3/6
ATV630U75N4ZU 3/6
ATV630U75Y6 2/9
ATV650C11N4F 2/11
ATV650C13N4F 2/11
ATV650C16N4F 2/11
ATV650C20N4F 2/11
ATV650C25N4F 2/11
ATV650C31N4F 2/11
ATV650D11N4 2/7
ATV650D11N4E 2/8
ATV650D15N4 2/7
ATV650D15N4E 2/8
ATV650D18N4 2/7
ATV650D18N4E 2/8
ATV650D22N4 2/7
ATV650D22N4E 2/8
ATV650D30N4 2/7
ATV650D30N4E 2/8
ATV650D37N4 2/7
ATV650D37N4E 2/8
ATV650D45N4 2/7
ATV650D45N4E 2/8
ATV650D55N4 2/7
ATV650D55N4E 2/8
ATV650D75N4 2/7
ATV650D75N4E 2/8
ATV650D90N4 2/7
ATV650D90N4E 2/8
ATV650U07N4 2/7
ATV650U07N4E 2/8
ATV650U15N4 2/7
ATV650U15N4E 2/8
ATV650U22N4 2/7
ATV650U22N4E 2/8
ATV650U30N4 2/7
ATV650U30N4E 2/8
ATV650U40N4 2/7
ATV650U40N4E 2/8
ATV650U55N4 2/7
ATV650U55N4E 2/8
ATV650U75N4 2/7
ATV650U75N4E 2/8
ATV660C11Q4X1 4/8
ATV660C11T4X1 4/9
ATV660C13Q4X1 4/8
ATV660C13T4X1 4/9
ATV660C16Q4X1 4/8
ATV660C16T4X1 4/9
ATV660C20Q4X1 4/8
ATV660C20T4X1 4/9
ATV660C25Q4X1 4/8
ATV660C25T4X1 4/9
ATV660C31Q4X1 4/8
ATV660C31T4X1 4/9
ATV660C35Q4X1 4/8
ATV660C35T4X1 4/9
ATV660C40Q4X1 4/8
ATV660C40T4X1 4/9
ATV660C45Q4X1 4/8
ATV660C45T4X1 4/9
ATV660C50Q4X1 4/8
ATV660C50T4X1 4/9
ATV660C56Q4X1 4/8
ATV660C56T4X1 4/9
ATV660C63Q4X1 4/8
ATV660C63T4X1 4/9
ATV660C71Q4X1 4/8
ATV660C71T4X1 4/9
ATV660C80Q4X1 4/8
ATV660C80T4X1 4/9
ATV680C11Q4X1 4/14
ATV680C11T4X1 4/15
ATV680C13Q4X1 4/14
ATV680C13T4X1 4/15
ATV680C16Q4X1 4/14
ATV680C16T4X1 4/15
ATV680C20Q4X1 4/14
ATV680C20T4X1 4/15
ATV680C25Q4X1 4/14
ATV680C25T4X1 4/15
ATV680C31Q4X1 4/14
ATV680C31T4X1 4/15
ATV680C35Q4X1 4/14
ATV680C35T4X1 4/15
ATV680C40Q4X1 4/14
ATV680C40T4X1 4/15
ATV680C45Q4X1 4/14
ATV680C45T4X1 4/15
ATV680C50Q4X1 4/14
ATV680C50T4X1 4/15
ATV680C56Q4X1 4/14
ATV680C56T4X1 4/15
ATV680C63Q4X1 4/14
ATV680C63T4X1 4/15
ATV680C71Q4X1 4/14
ATV680C71T4X1 4/15
ATV680C80Q4X1 4/14
ATV680C80T4X1 4/15
ATV6A0C11N6 3/11
ATV6A0C11Q4 3/8
ATV6A0C11Q6 3/13
ATV6A0C11R4 3/9
ATV6A0C11T4 3/10
ATV6A0C11T6 3/12
ATV6A0C13N6 3/11
ATV6A0C13Q4 3/8
ATV6A0C13Q6 3/13
ATV6A0C13R4 3/9
ATV6A0C13T4 3/10
ATV6A0C13T6 3/12
ATV6A0C16N6 3/11
ATV6A0C16Q4 3/8
ATV6A0C16Q6 3/13
ATV6A0C16R4 3/9
ATV6A0C16T4 3/10
ATV6A0C16T6 3/12
ATV6A0C20N6 3/11
ATV6A0C20Q4 3/8
ATV6A0C20Q6 3/13
ATV6A0C20R4 3/9
ATV6A0C20T4 3/10
ATV6A0C20T6 3/12
ATV6A0C25N6 3/11
ATV6A0C25Q4 3/8
ATV6A0C25Q6 3/13
ATV6A0C25R4 3/9
ATV6A0C25T4 3/10
ATV6A0C25T6 3/12
ATV6A0C31N6 3/11
ATV6A0C31Q4 3/8
ATV6A0C31Q6 3/13
ATV6A0C31R4 3/9
ATV6A0C31T4 3/10
ATV6A0C31T6 3/12
ATV6A0C35Q4 3/8
ATV6A0C35R4 3/9
ATV6A0C35T4 3/10
ATV6A0C40N6 3/11
ATV6A0C40Q4 3/8
ATV6A0C40Q6 3/13
ATV6A0C40R4 3/9
ATV6A0C40T4 3/10
ATV6A0C40T6 3/12
ATV6A0C45Q4 3/8
ATV6A0C45R4 3/9
ATV6A0C45T4 3/10
ATV6A0C50N6 3/11
ATV6A0C50Q4 3/8
ATV6A0C50Q6 3/13
ATV6A0C50R4 3/9
ATV6A0C50T4 3/10
ATV6A0C50T6 3/12
ATV6A0C56Q4 3/8
ATV6A0C56R4 3/9
ATV6A0C56T4 3/10
ATV6A0C63N6 3/11
ATV6A0C63Q4 3/8
ATV6A0C63Q6 3/13
ATV6A0C63R4 3/9
ATV6A0C63T4 3/10
ATV6A0C63T6 3/12
ATV6A0C71Q4 3/8
ATV6A0C71R4 3/9
ATV6A0C71T4 3/10
ATV6A0C80N6 3/11
ATV6A0C80Q4 3/8
ATV6A0C80Q6 3/13
ATV6A0C80R4 3/9
ATV6A0C80T4 3/10
ATV6A0C80T6 3/12
ATV6A0M10N6 3/11
ATV6A0M10Q6 3/13
ATV6A0M10T6 3/12
ATV6A0M12N6 3/11
ATV6A0M12Q6 3/13
ATV6A0M12T6 3/12
ATV6B0C11N6 3/17
ATV6B0C11Q4 3/14
ATV6B0C11Q6 3/19
ATV6B0C11R4 3/15
ATV6B0C11T4 3/16
ATV6B0C11T6 3/18
ATV6B0C13N6 3/17
ATV6B0C13Q4 3/14
ATV6B0C13Q6 3/19
ATV6B0C13R4 3/15
ATV6B0C13T4 3/16
ATV6B0C13T6 3/18
ATV6B0C16N6 3/17
ATV6B0C16Q4 3/14
ATV6B0C16Q6 3/19
ATV6B0C16R4 3/15
ATV6B0C16T4 3/16
ATV6B0C16T6 3/18
ATV6B0C20N6 3/17
ATV6B0C20Q4 3/14
ATV6B0C20Q6 3/19
ATV6B0C20R4 3/15
ATV6B0C20T4 3/16
ATV6B0C20T6 3/18
ATV6B0C25N6 3/17
ATV6B0C25Q4 3/14
ATV6B0C25Q6 3/19
ATV6B0C25R4 3/15
ATV6B0C25T4 3/16
ATV6B0C25T6 3/18
ATV6B0C31N6 3/17
ATV6B0C31Q4 3/14
ATV6B0C31Q6 3/19
ATV6B0C31R4 3/15
ATV6B0C31T4 3/16
ATV6B0C31T6 3/18
ATV6B0C35Q4 3/14
ATV6B0C35R4 3/15
ATV6B0C35T4 3/16
ATV6B0C40N6 3/17
ATV6B0C40Q4 3/14
ATV6B0C40Q6 3/19
ATV6B0C40R4 3/15
ATV6B0C40T4 3/16
ATV6B0C40T6 3/18
ATV6B0C45Q4 3/14
ATV6B0C45R4 3/15
ATV6B0C45T4 3/16
ATV6B0C50N6 3/17
ATV6B0C50Q4 3/14
ATV6B0C50Q6 3/19
ATV6B0C50R4 3/15
ATV6B0C50T4 3/16
ATV6B0C50T6 3/18
ATV6B0C56Q4 3/14
ATV6B0C56R4 3/15
ATV6B0C56T4 3/16
ATV6B0C63N6 3/17
ATV6B0C63Q4 3/14
ATV6B0C63Q6 3/19

ATV6B0C63R4 3/15
ATV6B0C63T4 3/16
ATV6B0C63T6 3/18
ATV6B0C71Q4 3/14
ATV6B0C71R4 3/15
ATV6B0C71T4 3/16
ATV6B0C80N6 3/17
ATV6B0C80Q4 3/14
ATV6B0C80Q6 3/19
ATV6B0C80R4 3/15
ATV6B0C80T4 3/16
ATV6B0C80T6 3/18
ATV6B0M10N6 3/17
ATV6B0M10Q6 3/19
ATV6B0M10T6 3/18
ATV6B0M12N6 3/17
ATV6B0M12Q6 3/19
ATV6B0M12T6 3/18
ATV6L0C13Q4 3/20
ATV6L0C13R4 3/21
ATV6L0C13T4 3/22
ATV6L0C16Q4 3/20
ATV6L0C16R4 3/21
ATV6L0C16T4 3/22
ATV6L0C20N6 3/23
ATV6L0C20Q4 3/20
ATV6L0C20Q6 3/25
ATV6L0C20R4 3/21
ATV6L0C20T4 3/22
ATV6L0C20T6 3/24
ATV6L0C25Q4 3/20
ATV6L0C25R4 3/21
ATV6L0C25T4 3/22
ATV6L0C28N6 3/23
ATV6L0C28Q6 3/25
ATV6L0C28T6 3/24
ATV6L0C31N6 3/23
ATV6L0C31Q4 3/20
ATV6L0C31Q6 3/25
ATV6L0C31R4 3/21
ATV6L0C31T4 3/22
ATV6L0C31T6 3/24
ATV6L0C40N6 3/23
ATV6L0C40Q4 3/20
ATV6L0C40Q6 3/25
ATV6L0C40R4 3/21
ATV6L0C40T4 3/22
ATV6L0C40T6 3/24
ATV6L0C45N6 3/23
ATV6L0C45Q6 3/25
ATV6L0C45T6 3/24
ATV6L0C50Q4 3/20
ATV6L0C50R4 3/21
ATV6L0C50T4 3/22
ATV6L0C56N6 3/23
ATV6L0C56Q6 3/25
ATV6L0C56T6 3/24
ATV6L0C63Q4 3/20
ATV6L0C63R4 3/21
ATV6L0C63T4 3/22
ATV6L0C71N6 3/23
ATV6L0C71Q6 3/25
ATV6L0C71T6 3/24
ATV6L0C80Q4 3/20
ATV6L0C80R4 3/21
ATV6L0C80T4 3/22
ATV6L0C90N6 3/23
ATV6L0C90Q4 3/20
ATV6L0C90Q6 3/25
ATV6L0C90R4 3/21
ATV6L0C90T4 3/22
ATV6L0C90T6 3/24
ATV6L0M10Q4 3/20
ATV6L0M10R4 3/21
ATV6L0M10T4 3/22
ATV6L0M12N6 3/23
ATV6L0M12Q4 3/20
ATV6L0M12Q6 3/25
ATV6L0M12R4 3/21
ATV6L0M12T4 3/22
ATV6L0M12T6 3/24
ATV6L0M14N6 3/23
ATV6L0M14Q6 3/25
ATV6L0M14T6 3/24
ATV6L0M15Q4 3/20
ATV6L0M15R4 3/21
ATV6L0M15T4 3/22
ATV6L0M16N6 3/23
ATV6L0M16Q6 3/25
ATV6L0M16T6 3/24
ATV6L0M18N6 3/23
ATV6L0M18Q4 3/20
ATV6L0M18Q6 3/25
ATV6L0M18R4 3/21
ATV6L0M18T4 3/22
ATV6L0M18T6 3/24
ATV6L0M22N6 3/23
ATV6L0M22Q6 3/25
ATV6L0M22T6 3/24
ATV6L0M26N6 3/23
ATV6L0M26Q6 3/25
ATV6L0M26T6 3/24

L

LU9AD7 2/31
LU9GC3 2/15, 2/27

N

NSYCAF223 2/12
NSYCAF291 2/12
NSYPTDS1 2/13
NSYPTDS2 2/13
NSYPTDS3 2/13
NSYPTDS4 2/13
NSYPTDS5 2/13

T

TCSCAR013M120 2/29
TCSCAR01NM120 2/30
TCSEGWB131W 2/14
TCSXCNAMUM3P 2/15
TSXCANCA100 2/29
TSXCANCA300 2/29
TSXCANCA50 2/29
TSXCANCADD03 2/30
TSXCANCADD1 2/30
TSXCANCB100 2/29
TSXCANCB300 2/29
TSXCANCB50 2/29
TSXCANCBDD3 2/30
TSXCANCBDD5 2/30
TSXCANCD100 2/29
TSXCANCD300 2/29
TSXCANCD50 2/29
TSXCANKCDF180T 2/29
TSXCANTDM4 2/30

V

VW3A1104R10 2/15
VW3A1104R100 2/15
VW3A1104R30 2/15
VW3A1104R50 2/15
VW3A1111 2/14
VW3A1112 2/15
VW3A1115 2/15
VW3A1116 2/15
VW3A3203 2/24
VW3A3204 2/24
VW3A3607 2/31
VW3A3608 2/29
VW3A3609 2/32
VW3A3618 2/29
VW3A3619 2/31
VW3A3627 2/31
VW3A3628 2/30
VW3A3720 2/28
VW3A3721 2/28
VW3A3725 2/32
VW3A4411 2/39
VW3A4551 2/41
VW3A4552 2/41
VW3A4553 2/41
VW3A4554 2/41
VW3A4555 2/41
VW3A4556 2/41
VW3A46101 2/34
VW3A46102 2/34
VW3A46103 2/34
VW3A46104 2/34
VW3A46105 2/34
VW3A46106 2/34
VW3A46107 2/34
VW3A46108 2/34
VW3A46109 2/34
VW3A46110 2/34
VW3A46111 2/34
VW3A46112 2/34
VW3A46113 2/34
VW3A46114 2/34
VW3A46115 2/34
VW3A46116 2/34
VW3A46118 2/34
VW3A46119 2/34
VW3A46120 2/35
VW3A46121 2/35
VW3A46122 2/35
VW3A46123 2/35
VW3A46124 2/35
VW3A46125 2/35
VW3A46126 2/35
VW3A46127 2/35
VW3A46128 2/35
VW3A46129 2/35
VW3A46130 2/35
VW3A46131 2/35
VW3A46132 2/35
VW3A46133 2/35
VW3A46134 2/35
VW3A46135 2/35
VW3A46137 2/35
VW3A46138 2/35
VW3A46139 2/36
VW3A46140 2/36
VW3A46141 2/36
VW3A46142 2/36
VW3A46143 2/36
VW3A46144 2/36
VW3A46145 2/36
VW3A46146 2/36
VW3A46147 2/36
VW3A46148 2/36
VW3A46149 2/36
VW3A46150 2/36
VW3A46151 2/36
VW3A46152 2/36
VW3A46153 2/36
VW3A46154 2/36
VW3A46155 2/36
VW3A46157 2/36
VW3A46158 2/37
VW3A46159 2/37
VW3A46160 2/37
VW3A46161 2/37
VW3A46162 2/37
VW3A46163 2/37
VW3A46164 2/37
VW3A46165 2/37
VW3A46166 2/37
VW3A46167 2/37
VW3A46168 2/37
VW3A46169 2/37
VW3A46170 2/37
VW3A46171 2/37
VW3A46172 2/37
VW3A46173 2/37
VW3A46174 2/37
VW3A46176 2/37
VW3A4701 2/39
VW3A4702 2/39
VW3A4703 2/39
VW3A4704 2/39
VW3A4705 2/39
VW3A4706 2/39
VW3A4707 2/39
VW3A4708 2/39
VW3A4709 2/39
VW3A4710 2/39
VW3A47801 3/7
VW3A47802 3/7
VW3A47803 3/7
VW3A47804 3/7
VW3A47805 3/7
VW3A47901 2/40
VW3A47902 2/40
VW3A47903 2/40
VW3A47904 2/40
VW3A47905 2/40
VW3A47906 2/40
VW3A47907 2/40
VW3A47908 2/40
VW3A5103 2/43
VW3A5104 2/43
VW3A5106 2/43
VW3A5107 2/43
VW3A5209 2/46
VW3A5210 2/46
VW3A5215 2/46
VW3A5216 2/46
VW3A5217 2/46
VW3A5218 2/46
VW3A5219 2/46
VW3A5301 2/42, 2/43
VW3A5302 2/42, 2/43
VW3A5303 2/42, 2/43
VW3A5304 2/42, 2/43
VW3A5305 2/42, 2/43
VW3A5306 2/42, 2/43
VW3A5307 2/42, 2/43
VW3A53901 2/46
VW3A53902 2/44, 2/46
VW3A53903 2/44, 2/46
VW3A53904 2/46
VW3A53905 2/44
VW3A5401 2/45, 2/46
VW3A5402 2/45, 2/46
VW3A5403 2/45, 2/46
VW3A5404 2/45, 2/46
VW3A5405 2/45, 2/46
VW3A5406 2/45, 2/46
VW3A5407 2/45, 2/46
VW3A8306R03 2/15, 2/27
VW3A8306R10 2/15, 2/27
VW3A8306R30 2/15, 2/27
VW3A8306RC 2/15, 2/27
VW3A8306TF03 2/15, 2/27
VW3A8306TF10 2/15, 2/27
VW3A9112 2/13
VW3A9113 2/13
VW3A9212 2/13
VW3A9213 2/13
VW3A93111 2/40
VW3A93112 2/40
VW3A93113 2/40
VW3A93114 2/40
VW3A93115 2/40
VW3A93116 2/40
VW3A93117 2/40
VW3A93118 2/40
VW3A93119 2/40
VW3A93120 2/40
VW3A95116 2/13
VW3A9513 2/13
VW3A9514 2/13
VW3A9704 2/13
VW3A9705 2/13
VW3A9706 2/13
VW3AP0101 4/19
VW3AP0102 4/19
VW3AP0103 4/19
VW3AP0104 4/19
VW3AP0105 4/19
VW3AP0106 4/19
VW3AP0111 4/19
VW3AP0112 4/19
VW3AP0113 4/19
VW3AP0114 4/19
VW3AP0115 4/19

VW3AP0116 4/19
VW3AP0201 4/19
VW3AP0202 4/19
VW3AP0251 4/19
VW3AP0252 4/19
VW3AP0253 4/19
VW3AP0254 4/19
VW3AP0255 4/19
VW3AP0271 4/19
VW3AP0272 4/19
VW3AP0273 4/19
VW3AP0274 4/19
VW3AP0275 4/19
VW3AP0276 4/19
VW3AP0301 4/17
VW3AP0302 4/17
VW3AP0303 4/17
VW3AP0304 4/17
VW3AP0305 4/17
VW3AP0351 4/17
VW3AP0352 4/17
VW3AP0353 4/17
VW3AP0354 4/17
VW3AP0355 4/17
VW3AP0401 4/18
VW3AP0402 4/18
VW3AP0403 4/18
VW3AP0404 4/18
VW3AP0405 4/18
VW3AP0415 4/16
VW3AP0421 4/16
VW3AP0501 4/17
VW3AP0502 4/17
VW3AP0503 4/17
VW3AP0551 4/17
VW3AP0552 4/17
VW3AP0561 4/16
VW3AP0562 4/16
VW3AP0563 4/16
VW3AP0564 4/16
VW3AP0565 4/16
VW3AP0566 4/16
VW3AP0567 4/16
VW3AP0568 4/16
VW3AP0569 4/16
VW3AP0601 4/18
VW3AP0602 4/18
VW3AP0611 4/18
VW3AP0612 4/18
VW3AP0613 4/18
VW3AP0614 4/18
VW3AP0615 4/18
VW3AP0701 4/18
VW3AP0702 4/18
VW3AP0704 4/18
VW3AP0705 4/18
VW3AP0707 4/18
VW3AP0708 4/18
VW3AP0710 4/18
VW3AP0711 4/18
VW3AP0801 4/17
VW3AP0802 4/17
VW3AP0803 4/17
VW3AP0804 4/17
VW3AP0805 4/17
VW3AP0811 4/19
VW3AP0812 4/19
VW3AP0813 4/19
VW3AP0814 4/19
VW3AP0815 4/19
VW3AP0816 4/19
VW3AP0817 4/19
VW3AP0819 4/19
VW3AP0821 4/19
VW3AP0851 4/17
VW3AP0852 4/17
VW3AP0853 4/17
VW3AP0854 4/17
VW3AP0855 4/17
VW3AP1502 4/16
VW3AP1503 4/16
VW3AP1601 4/16
VW3AP1801 4/16
VW3AP1807 4/16
VW3AP2001 4/16
VW3AP2002 4/16
VW3AP2003 4/16
VW3AP2004 4/16
VW3AP2101 4/16
VW3AP2701 4/16
VW3AP3203 4/16
VW3AP3204 4/16
VW3AP3607 4/16
VW3AP3608 4/16
VW3AP3609 4/16
VW3AP3618 4/16
VW3AP3627 4/16
VW3AP3628 4/16
VW3AP3720 4/16
VW3AP3721 4/16
VW3CANCARR03 2/29
VW3CANCARR1 2/29
VW3CANTAP2 2/30
VX5VP50A001 2/12
VX5VP50BC001 2/12
VX5VPM001 2/12
VX5VPM002 2/12
VX5VPS1001 2/12
VX5VPS2001 2/12
VX5VPS3001 2/12
VX5VPS3002 2/12
VX5VPS4001 2/12
VX5VPS5001 2/12
VX5VPS5002 2/12
VX5VPS6001 2/12
VZ3V1212 2/12
VZ3V1213 2/12

Z

ZB5AZ905 2/15

Life Is On | Schneider Electric

Learn more about our products at
www.se.com

The information provided in this documentation contains general descriptions and/or technical characteristics of the performance of the products contained herein. This documentation is not intended as a substitute for and is not to be used for determining suitability or reliability of these products for specific user applications. It is the duty of any such user or integrator to perform the appropriate and complete risk analysis, evaluation and testing of the products with respect to the relevant specific application or use thereof. Neither Schneider Electric nor any of its affiliates or subsidiaries shall be responsible or liable for misuse of the information contained herein.

Design: Schneider Electric
Photos: Schneider Electric

Schneider Electric Industries SAS
Head Office
35, rue Joseph Monier - CS 30323
F-92500 Rueil-Malmaison Cedex
France

DIA2ED2140502EN
August 2021 - V12.0