Product data sheet

Specifications

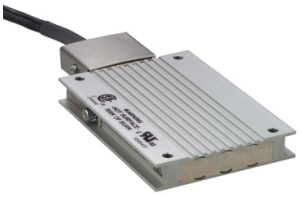

braking resistor - 72 ohm - 200 W - cable 3 m - IP65

VW3A7606R30

Product availability: Non-Stock - Not normally stocked in distribution facility

Main

Range of Product	Lexium Altivar
Range Compatibility	Lexium 32i Lexium 28 Altivar 32 Lexium 52 Altivar Machine ATV320 Lexium 15 Lexium 05 Lexium 32 Easy Lexium 16
Product compatibility	ATV32HU30N4 ATV32HU40N4 Variable speed drive ATV320 3 kW, 380...500 V, three phase Variable speed drive ATV320 4 kW, 380...500 V, three phase Variable speed drive ATV320 4 kW, 525...600 V, three phase Motion servo drive LXM16D 0.1 kW, 200...230 V, single phase Motion servo drive LXM16D 0.2 kW, 200...230 V, single phase Motion servo drive LXM16D 0.4 kW, 200...230 V, single phase Motion servo drive LXM16D 0.75 kW, 200...230 V, single phase Motion servo drive LXM16D 1 kW, 200...230 V, single phase Motion servo drive LXM16D 1.5 kW, 200...230 V, single phase
Product or Component Type	Braking resistor
Ohmic value	72 Ohm

Complementary

Energy peak	6000 J 480 V 6600 J 400 V 9600 J 230 V 14600 J 115 V
Average power available	50 W 122 °F (50 °C)
Continuous power	200 W
Protection Type	Thermal protection via the servo drive
Product Weight	2.6 lb(US) (1.2 kg)
Cable length	9.8 ft (3 m)

Environment

IP Degree of Protection	IP65
Ambient Air Temperature for Storage	-13…185 °F (-25…85 °C)
Ambient Air Temperature for Operation	32…122 °F (0…50 °C)

Ordering and shipping details

Category	US1PC5118263

Price is “List Price” and may be subject to a trade discount – check with your local distributor or retailer for actual price.

Disclaimer: This documentation is not intended as a substitute for and is not to be used for determining suitability or reliability of these products for specific user applications

Discount Schedule	PC51
GTIN	3389119207256
Returnability	No
Country of origin	CZ

Packing Units

Unit Type of Package 1	PCE
Nbr. of units in pkg.	1
Package 1 Height	1.772 in (4.500 cm)
Package 1 Width	15.748 in (40.000 cm)
Package 1 Length	5.118 in (13.000 cm)
Package weight(Lbs)	2.646 lb(US) (1.200 kg)

Contractual warranty

Warranty (in months)	18

Environmental Data

Schneider Electric aims to achieve Net Zero status by 2050 through supply chain partnerships, lower impact materials, and circularity via our ongoing “Use Better, Use Longer, Use Again” campaign to extend product lifetimes and recyclability.

Environmental Data explained

How we assess product sustainability

Use Better

Materials and Substances

Packaging made with recycled cardboard	**No**
Packaging without single use plastic	**No**
SCIP Number	**735ea399-2868-47fa-83de-4130bb0137d4**
EU RoHS Directive	**Compliant**
REACh Regulation	**Reference contains Substances of Very High Concern above the threshold**
California proposition 65	**WARNING: This product can expose you to chemicals including: Lead and lead compounds, which is known to the State of California to cause cancer and birth defects or other reproductive harm. For more information go to www.P65Warnings.ca.gov**

Use Longer

Lifetime extension

Repair	**No**

Use Again

Repack and remanufacture

Take-back	**No**

Dimensions Drawings

Braking Resistor

Dimensions

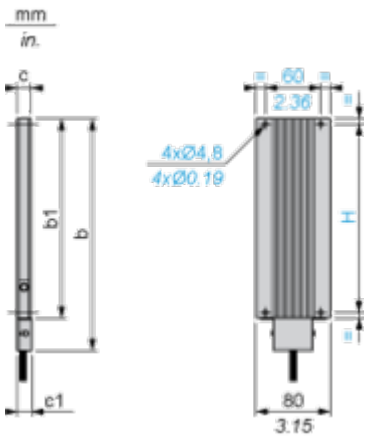

Dimensions in mm

b	b1	c	c1	H
251	216	15	15.5	204

Dimensions in in.

b	b1	c	c1	H
9.88	8.50	0.59	0.61	8.03