Product data sheet

Specifications

Delta 3 robot; P0; 3 to 4 axis; 10 kg permissible load; 0 to 400 mm working envelop

VRKP0S0RNC00000

Product availability: Non-Stock - Not normally stocked in distribution facility

Main

Range of Product	Lexium P, T
Device short name	P0
Product or Component Type	Delta 3 robot
Design	Compact

Complementary

Number of axis	3
Operating position	Rotational 360°
Operating travel	0…15.7 in (0…400 mm) horizontal 0…5.7 in (0…144 mm) vertical
Repeat accuracy	0.05 mm
Permanent permissible load	22.05 lb(US) (10 kg)
Maximum actuation speed	19.7 ft/s (6 m/s)
Maximum acceleration	410.1 ft/s² (125 m/s²) at 1 kg 393.7 ft/s² (120 m/s²) at 1.5 kg
Product Weight	60.8 lb(US) (27.6 kg)
Range Compatibility	Lexium SH3 motor

Environment

Environmental characteristic	Normal environment

Ordering and shipping details

Category	US1PC5218357
Discount Schedule	PC52
GTIN	3606481732811
Returnability	Yes
Country of origin	DE

Packing Units

Unit Type of Package 1	PCE
Nbr. of units in pkg.	1
Package 1 Height	36.220 in (92.000 cm)
Package 1 Width	47.441 in (120.500 cm)

Price is “List Price” and may be subject to a trade discount – check with your local distributor or retailer for actual price.

Disclaimer: This documentation is not intended as a substitute for and is not to be used for determining suitability or reliability of these products for specific user applications

Package 1 Length	47.441 in (120.500 cm)
Package weight(Lbs)	227.958 lb(US) (103.400 kg)

Contractual warranty

Warranty (in months)	18

Environmental Data

Schneider Electric aims to achieve Net Zero status by 2050 through supply chain partnerships, lower impact materials, and circularity via our ongoing “Use Better, Use Longer, Use Again” campaign to extend product lifetimes and recyclability.

Environmental Data explained >

How we assess product sustainability >

Environmental footprint

Total lifecycle Carbon footprint	**15 761 kg CO2 eq.**
Carbon footprint of the manufacturing phase [A1 to A3]	**205 kg CO2 eq.**
Carbon footprint of the distribution phase [A4]	**6 kg CO2 eq.**
Carbon footprint of the installation phase [A5]	**1 kg CO2 eq.**
Carbon footprint of the use phase [B2, B3, B4, B6]	**15 545 kg CO2 eq.**
Carbon footprint of the end-of-life phase [C1 to C4]	**3 kg CO2 eq.**
Environmental Disclosure	**Product Environmental Profile**

Use Better

Materials and Substances

Packaging made with recycled cardboard	**Yes**
Packaging without single use plastic	**No**
EU RoHS Directive	**Compliant By Exemption**
REACh Regulation	**Reference contains Substances of Very High Concern above the threshold**
California proposition 65	**WARNING: This product can expose you to chemicals including: Lead and lead compounds, which is known to the State of California to cause cancer and birth defects or other reproductive harm. For more information go to www.P65Warnings.ca.gov**

Use Longer

Lifetime extension

Repair	**No**

Use Again

Repack and remanufacture

Circularity Profile	**End of Life Information**
Take-back	**No**

Image of product / Alternate images
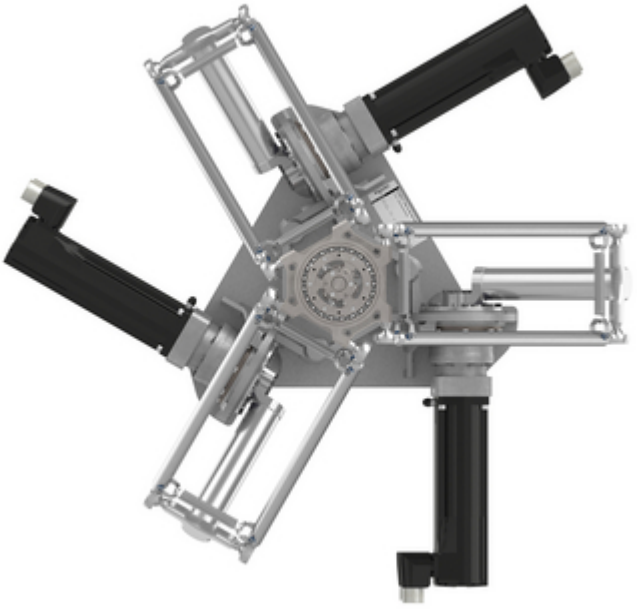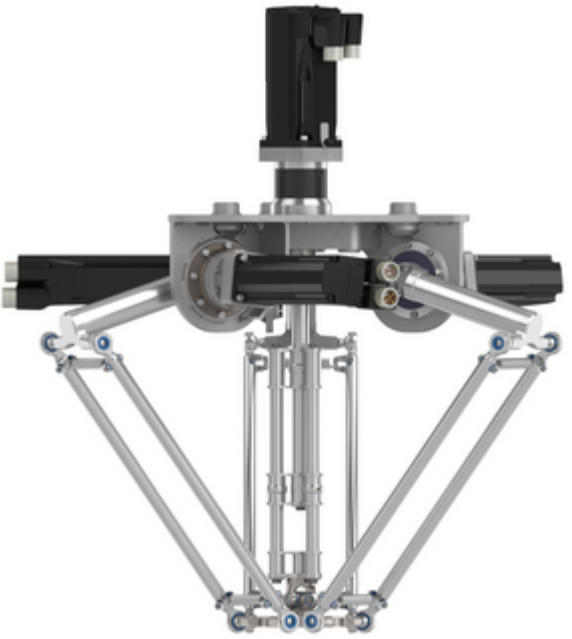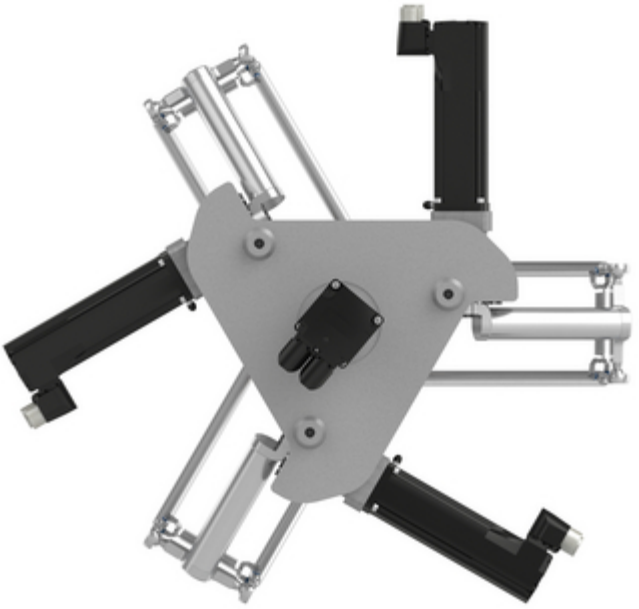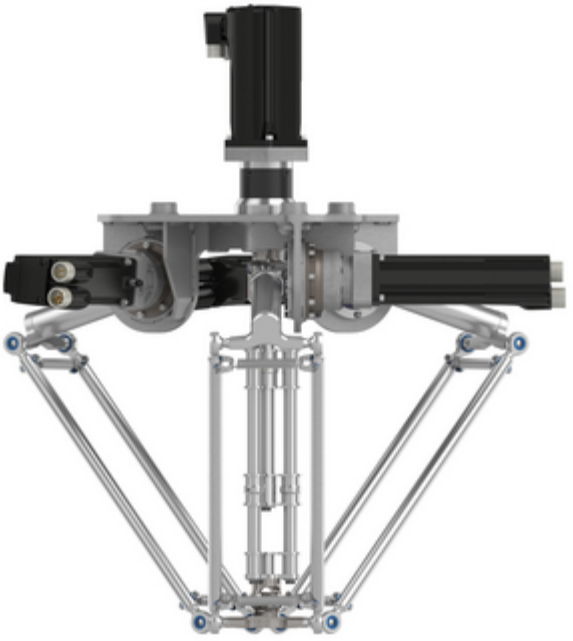
Alternative