Product data sheet

Specifications

Discontinued - Service only

Discrete input module, Modicon Premium, 28 input/output, 2/3 wire proximity sensors

TSXDMY28FK

Discontinued on: Dec 2, 2020

To be end-of-service on: Dec 31, 2026

Product availability: Non-Stock - Not normally stocked in distribution facility

Main

Range of Product	Modicon Premium Automation platform
Product or Component Type	Discrete I/O modules
Discrete I/O number	28
Discrete input number	16 current sink fast input IEC 1131-2 Type 1
Input logic	Positive
Input voltage	24 V 3.5 mA DC

Complementary

Voltage state 1 guaranteed	>= 11 V
Current state 1 guaranteed	>= 3 mA
Voltage state 0 guaranteed	<= 5 V
Current state 0 guaranteed	<= 1.5 mA
Sensor power supply	19…30 V
Filter time	0.1 to 7.5 ms by configuration 4 ms by default
Paralleling of inputs	Yes
Input compatibility	2-wire/3-wire proximity sensor
Insulation resistance	> 10 MOhm 500 V DC
Power dissipation	1.2 W + 0.1 x number of input at 1
Discrete output number	12
Maximum tungsten load	<6 W solid state output
Output voltage	24 V 0.5 A
Discrete output type	Solid state
Output voltage limits	19...30 V
Maximum output current	4 A by module 0.5 A by channel
Maximum leakage current	1 mA at state 0
[Ures] residual voltage	1.2 V at state 1
Minimum load impedance	48 W
Response time on output	0.6 ms

Price is “List Price” and may be subject to a trade discount – check with your local distributor or retailer for actual price.

Disclaimer: This documentation is not intended as a substitute for and is not to be used for determining suitability or reliability of these products for specific user applications

Switching frequency	0.5/LI² Hz
Output overvoltage protection	By transil diode
Reverse polarity protection	Reversed diode
Preactuator voltage detection threshold	16 V
Electrical connection	2 connectors HE-10
Current consumption	300 mA 5 V DC 75 mA 24 V DC
Module format	Standard
Product Weight	0.71 lb(US) (0.32 kg)

Environment

Dielectric strength	1500 V 50/60 Hz for 1 minute
Derating factor	60 % of inputs at state 1 140 °F (60 °C) fast input 60 % of the maximum current of the module 140 °F (60 °C) solid state output
Ambient Air Temperature for Operation	32…140 °F (0…60 °C)
Ambient Air Temperature for Storage	-13…158 °F (-25…70 °C)
Relative Humidity	5…95 % without condensation
Operating altitude	<= 6561.68 ft (2000 m)

Ordering and shipping details

Category	US1PC2222558
Discount Schedule	PC22
GTIN	3389110896404
Returnability	No

Packing Units

Unit Type of Package 1	PCE
Nbr. of units in pkg.	1
Package 1 Height	2.2 in (5.5 cm)
Package 1 Width	7.09 in (18.0 cm)
Package 1 Length	10.2 in (26.0 cm)
Package weight(Lbs)	17.7 oz (503.0 g)

Contractual warranty

Warranty (in months)	18

Environmental Data

Schneider Electric aims to achieve Net Zero status by 2050 through supply chain partnerships, lower impact materials, and circularity via our ongoing “Use Better, Use Longer, Use Again” campaign to extend product lifetimes and recyclability.

Environmental Data explained

How we assess product sustainability

Use Longer

Lifetime extension

Repair	**No**

Dimensions Drawings

Standard and Extendable Racks for Modules Mounting

Dimensions of Modules and Racks

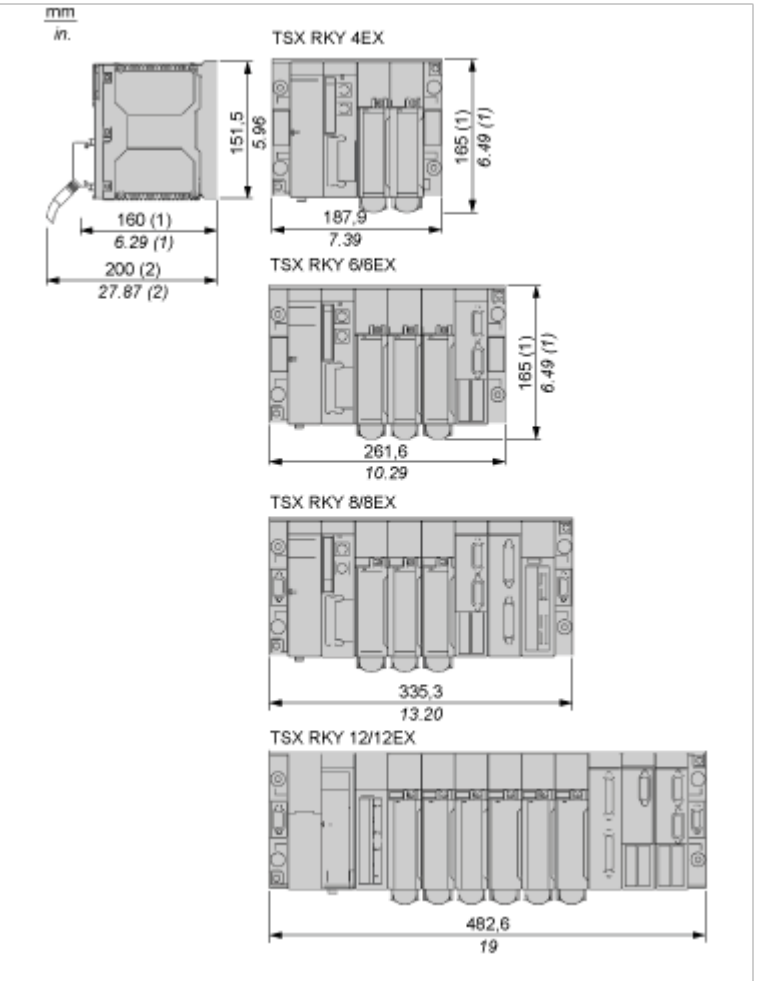

(**1**) With screw terminal block modules.
(**2**) Maximum depth for all types of modules and their associated connectors.

Connections and Schema

24 Vdc Input/Output 28-Channel Module

Wiring Diagram with Sensors

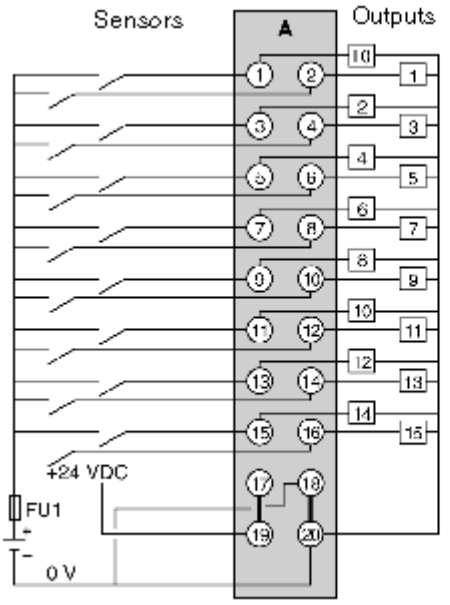

FU1 0.5 A quick-blow fuse.

Wiring Diagram with Pre-Actuators

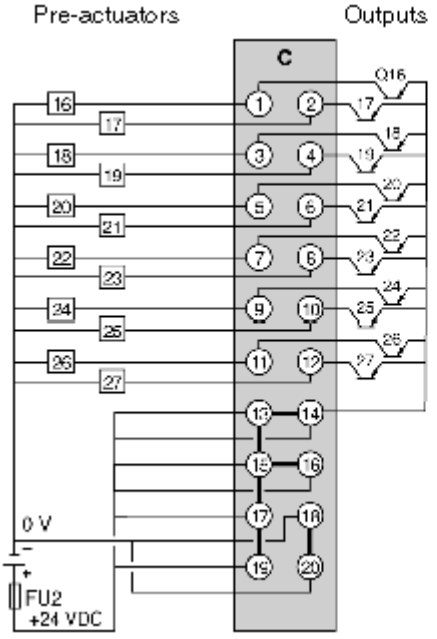

FU2 10 A quick-blow fuse.