Product data sheet

Specifications

Discontinued - Service only

discrete input module Modicon Premium - 32 I 48 V DC

TSXDEY32D3K

Discontinued on: Dec 2, 2020

To be end-of-service on: Dec 31, 2026

Product availability: Non-Stock - Not normally stocked in distribution facility

Main

Range of Product	Modicon Premium Automation platform
Product or Component Type	Discrete input module
Discrete input number	32 current sink isolated EN/IEC 61131-2 type 2
Discrete input voltage	48 V DC positive
Sensor power supply	38…60 V
Input compatibility	With 2-wire/3-wire proximity sensors EN/IEC 60947-5-2
Discrete input current	7 mA

Complementary

Voltage state 1 guaranteed	>= 30 V
Current state 1 guaranteed	>= 6.5 mA
Voltage state 0 guaranteed	<= 10 V
Current state 0 guaranteed	<= 2 mA
Input impedance	6300 Ohm at state 1
Response Time	4 ms <= 7 ms
isalotion resistance	< 10 MOhm 500 V DC
Power dissipation	(2 W + 0.1 W x No of channels used)
Electrical Connection	HE-10 connector
Marking	CE
Current consumption	140 mA 5 V DC 275 mA 24 V DC
Module format	Standard
Product Weight	0.68 lb(US) (0.31 kg)

Environment

Dielectric strength	1500 V AC 50/60 Hz

Disclaimer: This documentation is not intended as a substitute for and is not to be used for determining suitability or reliability of these products for specific user applications

Price is “List Price” and may be subject to a trade discount – check with your local distributor or retailer for actual price.

Standards	73/23/EEC IEC 60664 92/31/EEC CSA C22.2 No 213 Class I Division 2 Group D CSA C22.2 No 213 Class I Division 2 Group A CSA C22.2 No 213 Class I Division 2 Group B UL 508 93/68/EEC 89/336/EEC CSA C22.2 No 213 Class I Division 2 Group C CSA C22.2 No 142 EN/IEC 61131-2
Product Certifications	GL ABS BV RMRS LR DNV RINA
Ambient Air Temperature for Operation	32…140 °F (0…60 °C)
Ambient Air Temperature for Storage	-13…158 °F (-25…70 °C)
Relative Humidity	10…95 % without condensation for operation 5…95 % without condensation for storage
Operating altitude	0...6561.68 ft (0...2000 m)
Protective treatment	TC
IP Degree of Protection	IP20
Pollution degree	2

Ordering and shipping details

Category	US1PC2222558
Discount Schedule	PC22
GTIN	3389110876253
Returnability	No

Packing Units

Unit Type of Package 1	PCE
Nbr. of units in pkg.	1
Package 1 Height	2.2 in (5.5 cm)
Package 1 Width	7.09 in (18.0 cm)
Package 1 Length	10.2 in (26.0 cm)
Package weight(Lbs)	16.5 oz (469.0 g)

Contractual warranty

Warranty (in months)	18

Environmental Data

Schneider Electric aims to achieve Net Zero status by 2050 through supply chain partnerships, lower impact materials, and circularity via our ongoing “Use Better, Use Longer, Use Again” campaign to extend product lifetimes and recyclability.

Environmental Data explained

How we assess product sustainability

Use Better

Materials and Substances

California proposition 65	**WARNING: This product can expose you to chemicals including: Lead and lead compounds which is known to the State of California to cause cancer and birth defects or other reproductive harm.For more information go to www.p65warnings.ca.gov**

Use Longer

Lifetime extension

Repair	**No**

Dimensions Drawings

Standard and Extendable Racks for Modules Mounting

Dimensions of Modules and Racks

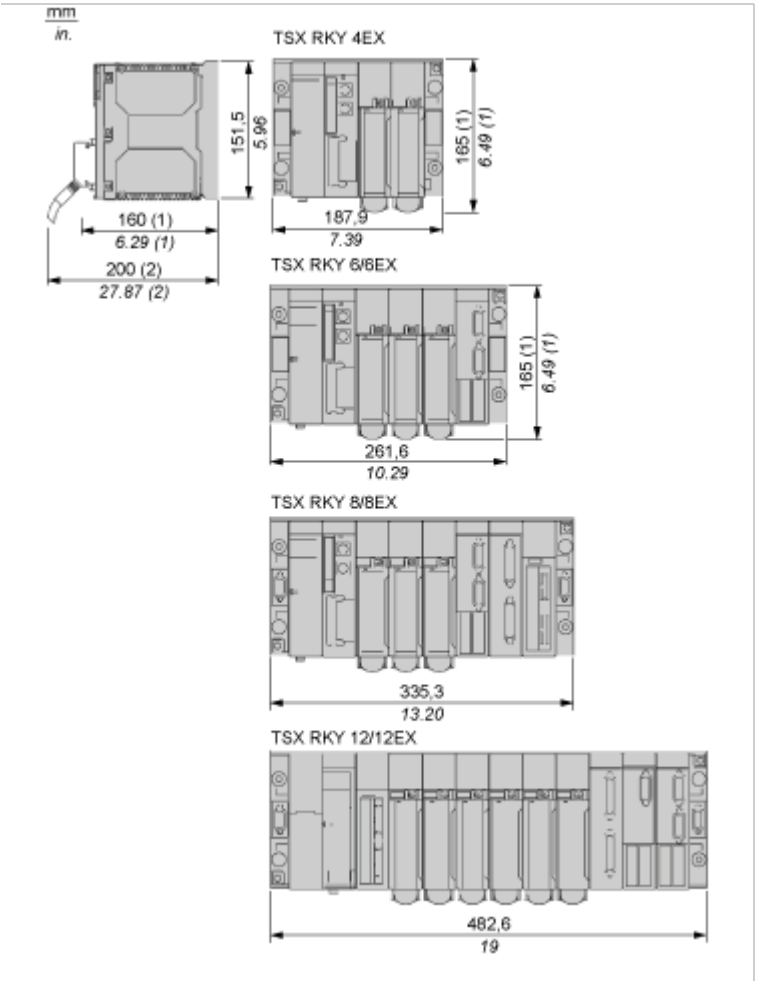

(**1**) With screw terminal block modules.
(**2**) Maximum depth for all types of modules and their associated connectors.

Connections and Schema

48 Vdc Discrete Input 32-Channel Module

Wiring Diagram

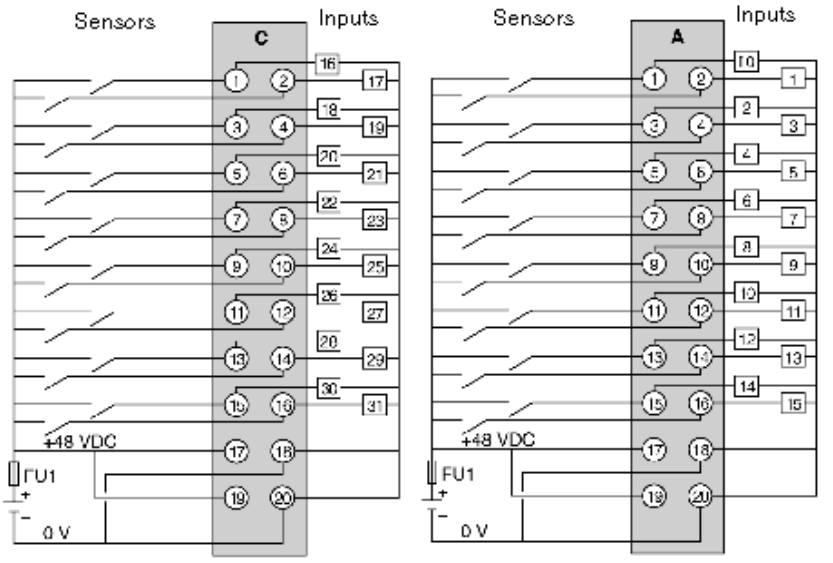

FU1 0.5 A quick-blow fuse