Premium and Atrium using EcoStruxure™ Control Expert

Processors, racks and power supply modules
Implementation Manual

(Original Document)

12/2018

35010524.10

www.schneider-electric.com

Schneider Electric

The information provided in this documentation contains general descriptions and/or technical characteristics of the performance of the products contained herein. This documentation is not intended as a substitute for and is not to be used for determining suitability or reliability of these products for specific user applications. It is the duty of any such user or integrator to perform the appropriate and complete risk analysis, evaluation and testing of the products with respect to the relevant specific application or use thereof. Neither Schneider Electric nor any of its affiliates or subsidiaries shall be responsible or liable for misuse of the information contained herein. If you have any suggestions for improvements or amendments or have found errors in this publication, please notify us.

You agree not to reproduce, other than for your own personal, noncommercial use, all or part of this document on any medium whatsoever without permission of Schneider Electric, given in writing. You also agree not to establish any hypertext links to this document or its content. Schneider Electric does not grant any right or license for the personal and noncommercial use of the document or its content, except for a non-exclusive license to consult it on an "as is" basis, at your own risk. All other rights are reserved.

All pertinent state, regional, and local safety regulations must be observed when installing and using this product. For reasons of safety and to help ensure compliance with documented system data, only the manufacturer should perform repairs to components.

When devices are used for applications with technical safety requirements, the relevant instructions must be followed.

Failure to use Schneider Electric software or approved software with our hardware products may result in injury, harm, or improper operating results.

Failure to observe this information can result in injury or equipment damage.

© 2018 Schneider Electric. All rights reserved.

Table of Contents

Safety Information 11
About the Book 13
Part I Premium and Atrium PLC stations 15
Chapter 1 Introduction to Premium and Atrium PLC stations 17
Premium PLC station 18
Atrium PLC station 20
Chapter 2 General introduction to the components of a PLC station 21
General Introduction to Premium Processors 22
General Introduction to Atrium Processors 24
General introduction to racks 26
General introduction to TSX PSY power supply modules 27
General introduction to Process and AS-i power supply modules 28
General introduction to the rack extender module 30
General Introduction to Input/Output Modules 31
General introduction to TSX CTY/CCY counting modules 33
Introduction to Axis Control Modules 34
General introduction to step by step command modules 35
General introduction to communication 36
General introduction to the AS-i bus interface module: TSX SAY 100 40
General introduction to the TSX ISPY weighing module 41
General introduction to the emergency stop monitoring module 42
General introduction to the TSX FAN ventilation module 43
Chapter 3 General introduction to the different configurations of a PLC station 45
Different Types of Premium PLC Stations 46
Different Types of PLC Station with Atrium Processors 49
Chapter 4 General introduction to PLC networks 53
General introduction to the Modbus bus 54
General introduction to a Modbus Plus network 55
General introduction to a Fipway network 56
General introduction to an Ethernet network 57
General introduction to communication by modem 58
General introduction to the Uni-Telway Bus 59
General introduction to Fipio field bus 60
General Introduction to CANopen Field Bus 61

Introduction to AS-i Bus 63
General introduction to Profibus DP field bus 64
General introduction INTERBUS field bus 65
Presentation of the Jnet network 67
Chapter 5 Operating Standards and Conditions 69
Standards and Certification 70
Operating conditions and environmental conditions to be avoided . . . 71
Premium PLC protection processing 76
Part II TSX P57/TSX H57 Premium processors 77
Chapter 6 TSX P57/TSX H57 processors: introduction 79
General Introduction. 80
Physical Description of TSX P57/TSX H57 Processors. 82
Real-time clock. 85
Catalog of TSX 57 Processors. 88
Size of Data on Premium and Atrium PLCs 93
Chapter 7 TSX P57/TSX H57 processors: installation 95
Positioning the processor module 96
How to mount processor modules 98
Installation of Modules next to TSX P57 0244/104/154 Processors . . 100
Standard Memory Cards for PLCs 101
Application\File and File Storage Type Memory Cards 104
Processing on insertion/extraction of a PCMCIA memory extension card on a Premium PLC. 108
Mounting/Removing PCMCIA Memory Extension Cards on a TSX P57/TSX H57 Processor 110
Chapter 8 TSX P57/TSX H57 processors: diagnostics 115
Display 116
Precautions to be taken when replacing a TSX P57/TSX H57 processor 118
Changing the TSX P57/TSX H57 RAM Memory Backup Battery 119
Changing the Batteries of a PCMCIA Memory Card 122
Battery Lifetimes for the PCMCIA Memory Card 126
What happens after you press the processor RESET button 135
Finding errors using processor state LEDs 136
Non blocking errors 137
Blocking errors 139
Processor or system errors 140
Chapter 9 TSX P57 0244 processors 141
General Characteristics of the TSX P57 0244 processors. 141

Chapter 10 TSX P57 104 processors 143
General characteristics of the TSX P57 104 processors 143
Chapter 11 TSX P57 154 processors 145
General characteristics of the TSX P57 154 processors 145
Chapter 12 TSX P57 1634 processors 147
General Characteristics of the TSX P57 1634 processors 147
Chapter 13 TSX P57 204 processors 149
General characteristics of the TSX P57 204 processors 149
Chapter 14 TSX P57 254 processors 151
General characteristics of the TSX P57 254 processors 151
Chapter 15 TSX P57 2634 processors 153
General Characteristics of the TSX P57 2634 processors 153
Chapter 16 TSX P57 304 processors 155
General characteristics of the TSX P57 304 processors 155
Chapter 17 TSX P57 354 processors 157
General Characteristics of the TSX P57 354 processors 157
Chapter 18 TSX P57 3634 processors 159
General characteristics of the TSX P57 3634 processors 159
Chapter 19 TSX P57 454 processors 161
General characteristics of the TSX P57 454 processors 161
Chapter 20 TSX P57 4634 processors 163
General Characteristics of the TSX P57 4634 processors 163
Chapter 21 TSX P57 554 processors 165
General Characteristics of the TSX P57 554 processors 165
Chapter 22 TSX P57 5634 processors 167
General Characteristics of the TSX P57 5634 processors 167
Chapter 23 TSX P57 6634 processors 169
General Characteristics of the TSX P57 6634 processors 169
Chapter 24 TSX H57 24M processors. 171
General Characteristics of the TSX H57 24M processors 171
Chapter 25 TSX H57 44M processors. 173
General Characteristics of the TSX H57 44M processors 173
Chapter 26 Premium TSX P57/TSX H57 processor: general characteristics. 175
Features of Premium Processors 176
Electrical Characteristics of the TSX P57/TSX H57 Processors and Devices Which Can Be Connected or Integrated 177
Defining and counting application-specific channels 180

Chapter 27 Processor performance 181
MAST task cycle time: introduction 182
MAST Task Cycle Time: Program Processing Ppt 183
MAST Task Cycle Time: Input/Output Internal Processing 184
Example of the calculation of cycle times of a MAST task under the following conditions 187
FAST Task Cycle Time 189
Event Response Time 190
Part III Atrium processors 191
Chapter 28 Atrium processors: introduction 193
General introduction. 194
Physical Description of Atrium Processors 195
Real-time clock. 197
Dimensions of Atrium processor cards 198
The different standard elements constituting an Atrium card. 200
The different optional elements constituting an Atrium card 201
Catalog of Atrium Processors 204
Chapter 29 Atrium processors: installation 205
Precautions to be taken during installation 206
Physical installation of the Atrium processor in the PC 207
Logical installation of the Atrium processor on the X-Bus 208
Operations to be carried out before installation 211
How to configure the Atrium processor's address on the X-Bus 212
How to configure the processor's standard I/O address on the PCI bus 213
How to install the Atrium processor card in the PC 214
Installing the 24 V power supply card 216
Integration of the Atrium processor within an X-Bus cable segment . . 219
How to install/remove the memory extension card on the Atrium processor 222
Memory cards for Atrium processors 224
How to install/remove communication cards on the Atrium processor. 225
Processing on insertion/extraction of a PCMCIA memory card on an Atrium PLC. 228
Precautions to be taken when replacing an Atrium processor 229

Chapter 30 Atrium processors: Diagnostics 231
Description of Atrium Processor LEDs 232
Changing the Atrium RAM memory backup battery 234
What happens after you press the processor RESET button 237
How the Atrium processor behaves after an action on the PC. 238
Finding errors via the processor status LEDs 239
Chapter 31 TSX PCI 57 204 processor. 241
General characteristics of the TSX PCI 57 204 processors 241
Chapter 32 TSX PCI 57 354 Processor. 243
General Characteristics of the TSX PCI 57 354 Processor. 243
Chapter 33 Atrium processors: general characteristics. 245
Features of Atrium Processors 246
Electrical Characteristics of the Atrium Processors and the Devices Which Can Be Connected and Integrated. 247
Defining and counting application-specific channels 250
Processor performance 251
Part IV TSX PSY supply modules. 253
Chapter 34 TSX PSY... supply modules: introduction 255
General introduction 256
Supply modules: description 258
Catalog of TSX PSY... supply modules 260
Chapter 35 TSX PSY ... supply modules: installation. 263
Installation/mounting TSX PSY supply modules 264
Rules for connecting TSX PSY supply modules 265
Connecting alternating current power supply modules 267
Connecting direct current power supply modules from a floating 24 or 48 VDC direct current network 269
Connecting DC power supply modules from an AC network. 271
Sensor and pre-actuator power supply servo control 275
Definition of protection devices at the start of a line 278
Chapter 36 TSX PSY ... supply modules: diagnostics 281
Display on TSX PSY supply modules 282
Back-up battery on TSX PSY ... power supply modules 283
Power supply failure to rack other than rack 0 284
What happens after pressing the RESET button on a power supply module. 285
Chapter 37 TSX PSY ... supply modules : auxiliary functions 287
Alarm relay on TSX PSY supply modules 288
Characteristics of the alarm relay contact 290

Chapter 38 TSX PSY power supply modules: breakdown of power consumption and power 293
Breakdown of power consumption for selection of the power supply module 294
Power consumption breakdown 296
Power consumption breakdown 297
Power consumption breakdown 298
Power Consumption Breakdown 299
Power consumption breakdown 300
Breakdown of power 301
Chapter 39 TSX PSY 2600 power supply module 303
Characteristics of the TSX PSY 2600 power supply module 303
Chapter 40 TSX PSY 5500 power supply module 305
Characteristics of the TSX PSY 5500 power supply module 305
Chapter 41 TSX PSY 8500 power supply module 307
Characteristics of the TSX PSY 8500 power supply module 307
Chapter 42 TSX PSY 1610 power supply module 309
Characteristics of the TSX PSY 1610 power supply module 309
Chapter 43 TSX PSY 3610 power supply module 311
Characteristics of the TSX PSY 3610 power supply module 311
Chapter 44 TSX PSY 5520 power supply module 313
Characteristics of the TSX PSY 5520 power supply module 313
Part V Process power supplies 315
Chapter 45 Process power supply modules: introduction 317
General Introduction to Process Power Supply Modules 318
Physical description of TBX SUP 10 supply block 319
Physical description of the TSX SUP 1011 supply module 320
Physical description of TSX 1021/1051 supply modules 321
Description of TSX SUP 1101 supply module 322
Physical description of the module mounting plate 323
Catalog of 24 V DC process power supplies 324
Process supply: auxiliary functions 326
Chapter 46 Process power supply modules: installation 329
Dimensions/mounting of Process power supplies 330
TBX SUP 10 dimensions/mounting/connections 333
Dimensions/mounting of TSX SUP 1101 power supplies 335
Summary of mounting methods 337

Chapter 47 Process supply modules: connections 339
Connection of TSX SUP 1011/1021 power supplies 340
Connection of TSX SUP 1051 power supplies 342
Connection of TSX SUP 1101 power supplies 344
Chapter 48 Characteristics of the Process power supply modules . . 347
Electrical characteristics of process supply modules: TBX SUP 10 and TSX SUP 1011 348
Electrical characteristics of process supply modules: TSX SUP 1021/1051/1101. 350
Environmental characteristics 352
Part VI TSX RKY.. standard and extendable racks 355
Chapter 49 Introduction to TSX RKY .. standard/extendable racks. . 357
Standard and extendable TSX RKY racks 358
Standard rack: description. 362
Extendable rack: description 364
Chapter 50 TSX RKY.. standard and extendable racks : installation/mounting. 367
Installing Racks 368
mounting and fixing racks 371
Connection of the ground to a TSX RKY rack. 373
Chapter 51 TSX RKY.. standard and extendable racks: functions . . 375
Building a PLC Station with Premium Processor. 376
Building a PLC Station with an Atrium Processor 379
PLC station rack addressing 382
Principle of addressing two racks at the same address 384
Module addresses 385
Installation of the power supply units, processors and other modules 387
Chapter 52 TSX RKY Racks: accessories 391
TSX CBY..0K X-Bus extension cable 392
TSX CBY 1000 bus X extension cable 394
Line terminator TSX TLYEX 396
Positioning of line terminators on a station using a Premium processor 397
Positioning of line termination on a station using an Atrium processor 398
TSX RKA 02 protective cover for unoccupied positions 399
Labeling 400
Compatibility with the Installed Base 402

Chapter 53 X-Bus extension module 405
Bus X extension module: introduction 406
Rack Extender Module: physical description 408
X-Bus extension module: installation 409
Bus X extension module: configuration 412
Bus X extension module: maximum distances according to module type 413
Bus X extension modules: connections 417
X-Bus extension module: diagnostics 419
Topology of a PLC station with extension module 420
Managing a power supply module fitted with an bus X extension module 422
Chapter 54 Ventilation module 423
Ventilation module: general introduction 424
Ventilation module: physical description 426
Ventilation module: catalog 427
Ventilation module: dimensions 428
Ventilation module: mounting 429
Rules for installing racks fitted with ventilation modules 431
Ventilation Module: Connections 432
Ventilation module: characteristics 434
Index 435

Safety Information

Important Information

NOTICE

Read these instructions carefully, and look at the equipment to become familiar with the device before trying to install, operate, service, or maintain it. The following special messages may appear throughout this documentation or on the equipment to warn of potential hazards or to call attention to information that clarifies or simplifies a procedure.

The addition of this symbol to a “Danger” or “Warning” safety label indicates that an electrical hazard exists which will result in personal injury if the instructions are not followed.

This is the safety alert symbol. It is used to alert you to potential personal injury hazards. Obey all safety messages that follow this symbol to avoid possible injury or death.

DANGER

DANGER indicates a hazardous situation which, if not avoided, **will result in** death or serious injury.

WARNING

WARNING indicates a hazardous situation which, if not avoided, **could result in** death or serious injury.

CAUTION

CAUTION indicates a hazardous situation which, if not avoided, **could result** in minor or moderate injury.

NOTICE

NOTICE is used to address practices not related to physical injury.

PLEASE NOTE

Electrical equipment should be installed, operated, serviced, and maintained only by qualified personnel. No responsibility is assumed by Schneider Electric for any consequences arising out of the use of this material.

A qualified person is one who has skills and knowledge related to the construction and operation of electrical equipment and its installation, and has received safety training to recognize and avoid the hazards involved.

About the Book

At a Glance

Document Scope

This manual describes the hardware installation of the Premium and Atrium range of PLCs and their main accessories.

It contains 6 parts:

- General presentation of Premium and Atrium PLC stations,
- TSX P57/TSX H57 Premium Processors,
- TSX PCI 57 Atrium Processors,
- TSX PSY Supply modules,
- Process power supply modules,
- Standard and extendable TSX RKY racks.

Validity Note

This documentation is valid for EcoStruxure™ Control Expert 14.0 or later.

The technical characteristics of the devices described in the present document also appear online. To access the information online:

Step	Action
1	Go to the Schneider Electric home page *www.schneider-electric.com*.
2	In the **Search** box type the reference of a product or the name of a product range. ● Do not include blank spaces in the reference or product range. ● To get information on grouping similar modules, use asterisks (*).
3	If you entered a reference, go to the **Product Datasheets** search results and click on the reference that interests you. If you entered the name of a product range, go to the **Product Ranges** search results and click on the product range that interests you.
4	If more than one reference appears in the **Products** search results, click on the reference that interests you.
5	Depending on the size of your screen, you may need to scroll down to see the data sheet.
6	To save or print a data sheet as a .pdf file, click **Download XXX product datasheet**.

The characteristics that are presented in the present document should be the same as those characteristics that appear online. In line with our policy of constant improvement, we may revise content over time to improve clarity and accuracy. If you see a difference between the document and online information, use the online information as your reference.

Product Related Information

⚠ WARNING

UNINTENDED EQUIPMENT OPERATION

The application of this product requires expertise in the design and programming of control systems. Only persons with such expertise should be allowed to program, install, alter, and apply this product.

Follow all local and national safety codes and standards.

Failure to follow these instructions can result in death, serious injury, or equipment damage.

Part I
Premium and Atrium PLC stations

In This Chapter

This part gives a general overview of the Premium TSX P57/TSX H57 and the Atrium TSX PCI 57 PLC station, the various sub-assemblies and the networks and field buses used.

What Is in This Part?

This part contains the following chapters:

Chapter	Chapter Name	Page
1	Introduction to Premium and Atrium PLC stations	17
2	General introduction to the components of a PLC station	21
3	General introduction to the different configurations of a PLC station	45
4	General introduction to PLC networks	53
5	Operating Standards and Conditions	69

Chapter 1
Introduction to Premium and Atrium PLC stations

Subject of this Chapter

This chapter gives a general overview of TSX P57/TSX H57 and TSX PCI 57 PLC stations.

What Is in This Chapter?

This chapter contains the following topics:

Topic	Page
Premium PLC station	18
Atrium PLC station	20

Premium PLC station

General

Premium TSX P57 automated platform processors manage the entire PLC station, which is made up of "Discrete" Input/Output modules, analog Input/Output modules and application-specific modules. These can be distributed over one or several racks connected to the X Bus or the field bus.

Premium TSX H57 are dedicated to Hot Standby applications. A premium Hot Standby system consists of two identical PLC stations distributed over one or several racks. One of the two PLCs functions as the Primary controller and the other one as the Standby controller.

Illustration

Example of 2 Premium PLC stations:

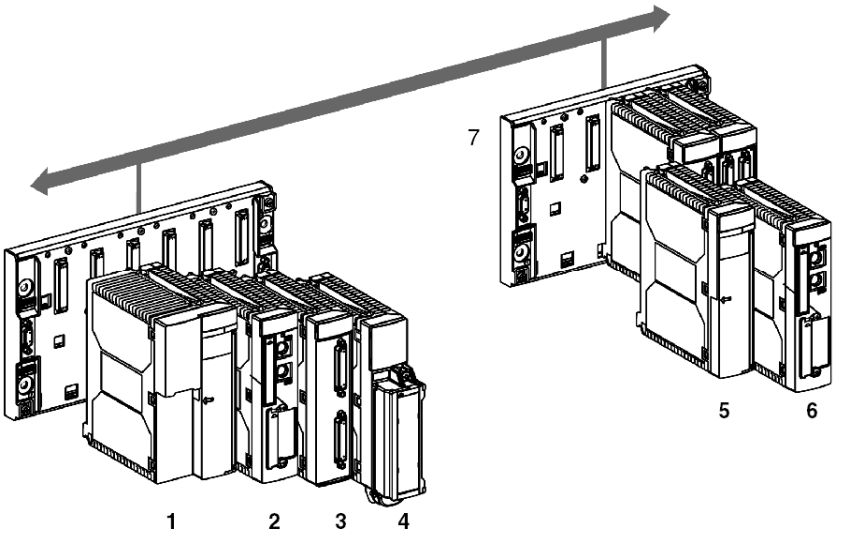

NOTE: If the second rack does not contain a processor module, this is a **single** PLC station distributed on 2 racks.

Number table

Description according to the addresses in the diagram above:

Number	Description
1	Double format power supply module.
2	Processor module.
3	X Bus extension module.
4	Input/Output module.
5	Standard format power supply module.
6	Processor module.
7	TSX RKY rack.

Atrium PLC station

General

Atrium TSX PCI 57 coprocessors are built into a PC and manage an entire PLC station composed of the same Input/Output modules as the Premium processors (i.e. "Discrete", analog, application and communication modules). These modules can be distributed over one or more racks connected to the X Bus.

Illustration

Example of an Atrium PLC station:

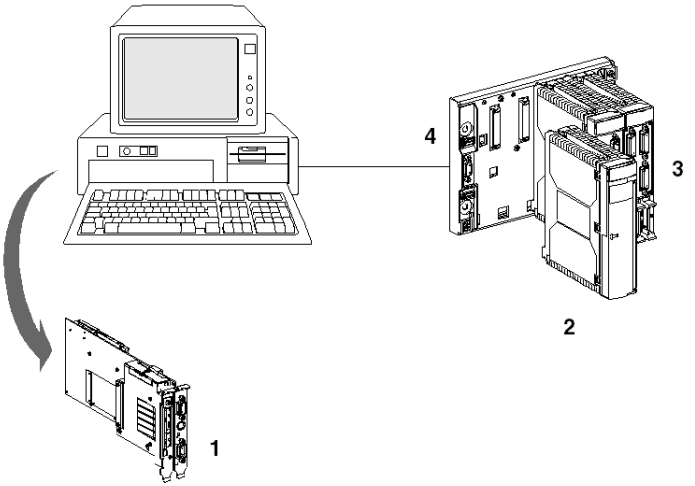

Number table

Description according to the addresses in the diagram above:

Number	Description
1	Coprocessor.
2	Supply module.
3	Input/Output modules.
4	TSX RKY rack.

Chapter 2
General introduction to the components of a PLC station

Aim of this Chapter

The aim of this Chapter is to provide an overview of the different components which may make up a PLC station.

What Is in This Chapter?

This chapter contains the following topics:

Topic	Page
General Introduction to Premium Processors	22
General Introduction to Atrium Processors	24
General introduction to racks	26
General introduction to TSX PSY power supply modules	27
General introduction to Process and AS-i power supply modules	28
General introduction to the rack extender module	30
General Introduction to Input/Output Modules	31
General introduction to TSX CTY/CCY counting modules	33
Introduction to Axis Control Modules	34
General introduction to step by step command modules	35
General introduction to communication	36
General introduction to the AS-i bus interface module: TSX SAY 100	40
General introduction to the TSX ISPY weighing module	41
General introduction to the emergency stop monitoring module	42
General introduction to the TSX FAN ventilation module	43

General Introduction to Premium Processors

General Points

Each PLC station is equipped with a processor, chosen according to:

- Processing power (number of I/Os handled),
- Memory capacity,
- Processing type: sequential or sequential + process control.

(See *TSX P57/TSX H57 Premium processors, page 77*).

Table of different processor format types:

Processor	Illustration
Standard format processors: ● TSX P57 0244, ● TSX P57 104, ● TSX P57 154.	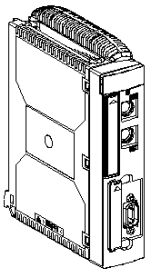
Double format processors: ● TSX P57 204, ● TSX P57 254, ● TSX P57 304, ● TSX P57 354, ● TSX P57 454.	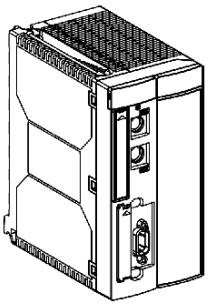

Processor	Illustration
Double format processors: ● TSX P57 1634, ● TSX P57 2634, ● TSX P57 3634, ● TSX P57 4634.	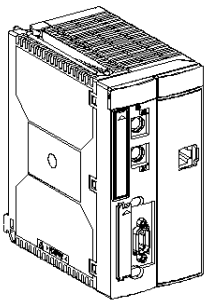
Double format processors: ● TSX P57 554, ● TSX P57 5634, ● TSX P57 6634, ● TSX H57 24M, ● TSX H57 44M.	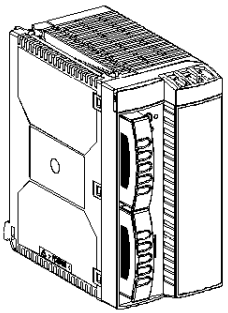

TSX P57 0244

The TSX P57 0244 processor is available in 3 versions:

- In single version **TSX P57 0244** with:
  - One processor,
  - A TSX CPP 110 CANopen PCMCIA card.
- In alternating configuration version, **TSX P57 CA 0244** with:
  - TSX RKY 6 standard rack,
  - One processor,
  - Alternating Current (100 240VAC) TSX PSY 2600,
  - A TSX CPP 110 CANopen PCMCIA card,
  - A TSX CTY 2A counting module.
- In direct configuration version, **TSX P57 CD 0244** with:
  - TSX RKY 6 standard rack,
  - One processor,
  - A direct current supply (24VDC) TSX PSY 1610,
  - A TSX CPP 110 CANopen PCMCIA card,
  - A TSX CTY 2A counting module.

General Introduction to Atrium Processors

General Points

Installed on the **PCI** bus of an industrial or office PC running in a Windows 2000 or Windows XP environment, they are used to control a PLC station.

Also, installation of a communication driver enables transparent communication between the host PC and the processor, without the need for another programming terminal.

There are two types of Atrium processor:

- TSX PCI 57 204
- TSX PCI 57 354

See *Atrium processors, page 191*.

Illustrations

Illustration of a TSX PCI 57 processor:

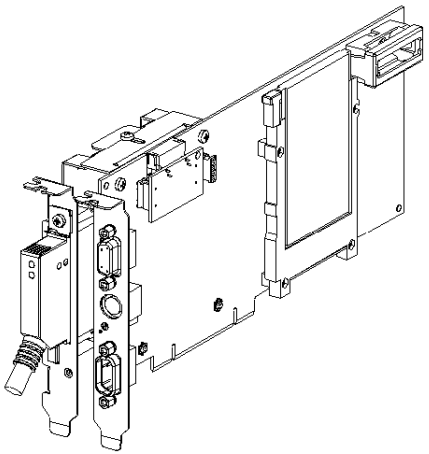

Illustration of a TSX PCI 57 processor with an optional 24 V power supply:

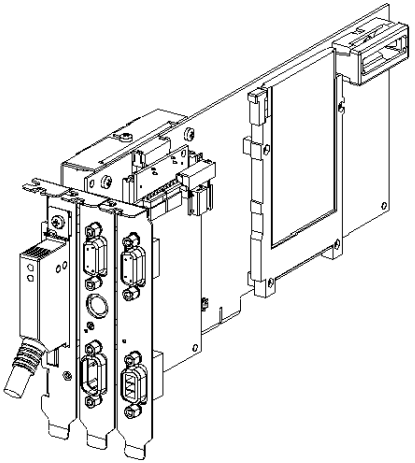

General introduction to racks

General

Two families of racks are offered:

- **Standard racks**: 6, 8 and 12 positions
  They are used to make up a PLC station which is limited to a single rack.
- **Extendable racks**: 4, 6, 8 and 12 positions
  They are used to make up a PLC station which can contain up to:
  - a maximum of 16 racks if the station is made up of racks with 4, 6, or 8 positions,
  - a maximum of 8 racks if the station is made up of racks with 12 positions.

See "Standard and extendable racks" *(see page 355)*.

Illustration

TSX RKY extendable rack (6 positions)

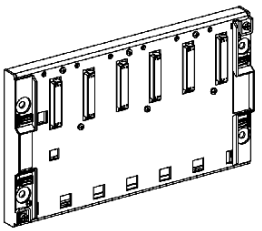

TSX RKY extendable rack (12 positions)

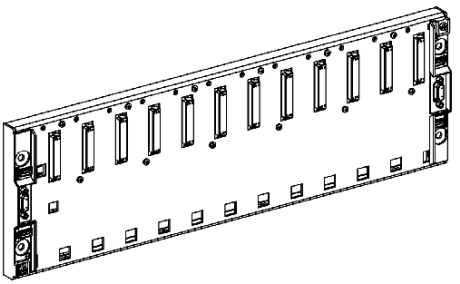

General introduction to TSX PSY power supply modules

General points

Each rack requires a power supply module *(see page 253)* defined according to the distributed network (alternating or direct current) and the power required for the rack.

There are two types of modules:

- standard format power supply module,
- double format power supply module.

Illustration

The following illustration shows the two formats for TSX PSY power supply modules:

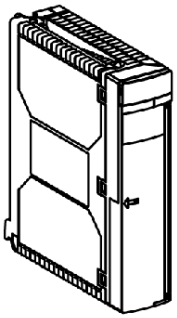

standard format supply module for alternating or direct current network

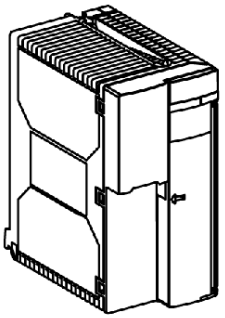

double format supply module for alternating or direct current network

General introduction to Process and AS-i power supply modules

Process power supply modules

A wide range of power supply units and modules is offered to cater for the needs of users in the best possible way. Controlled by Premium or Atrium PLCs and designed to supply the peripherals of an automation system with 24 VDC, they can all be mounted on a Telequick AM1-PA mounting board and some can be mounted on a AM1-DP200 / DE 200 central DIN rail.

See *Process power supplies, page 315*.

Illustration

Different types of Process power supply:

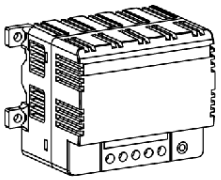

24 VCC / 1 A

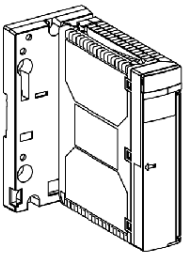

24 VCC / 1 A

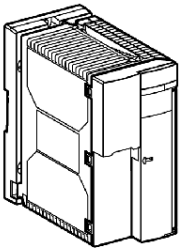

24 VCC / 2 A
24 VCC / 5 A

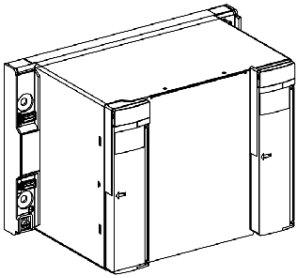

24 VCC / 10 A

AS-i power supply modules

These are designed to supply 30 VDC to components connected to the AS-i field bus.

Illustration

Types of AS-i power supply:

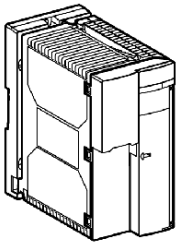

30 VCC AS-i / 2,4 A

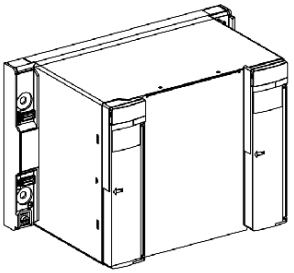

30 VCC AS-i / 5 A et 24 VCC

General introduction to the rack extender module

General

This module allows the extension of two bus segments from the rack supporting the processor, up to a maximum distance of 250 meters. Each extended segment is able to support racks distributed along the local bus to a maximum length of 100 meters.

See *X-Bus extension module, page 405*.

Rack extender module.

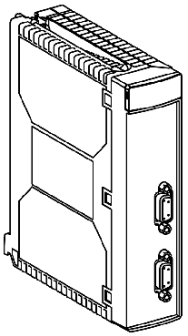

General Introduction to Input/Output Modules

Discrete Inputs/Outputs

A wide range of discrete Input/Output modules are available to meet your needs in the best possible way. These modules differ from one another in their:

Characteristics	Description
Modularity	8, 16, 28, 32 or 64 channels.
Type of inputs	● modules with direct current inputs (24VDC, 48VDC), ● modules with alternating current inputs (24 VAC, 48 VAC, 110 VAC, 240 VAC).
Type of outputs	● modules with relay outputs, ● modules with direct current static outputs (24 VDC / 0.1 A - 0.5 A - 2 A, 48 VDC / 0.25 A - 1 A), ● modules with alternating current static outputs (24VAC / 130VAC / 1A, 48VAC / 240 VAC / 2A).
Type of connectors	Screw terminal blocks and HE10 connectors allow the connection of sensors and pre-actuators via the TELEFAST 2 prewiring system.

Illustration:

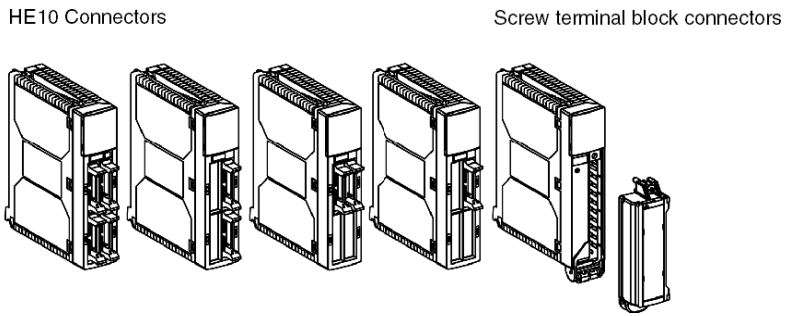

Analog Inputs/Outputs

The range of analog Input and Output modules can meet your main needs. These modules differ from one another in their:

Characteristics	Description
Modularity	4, 6, 16 channels.
Performance and range of signals offered	Voltage/current, thermoelectric couple, multi-range (thermoelectric couple, heat probe, voltage/current).
Type of connectors	Screw terminal blocks or 25-pin SUB-D connectors allow the connection of the sensors via the TELEFAST 2 prewiring system.

Illustration: 25 pin SUB-D connectors

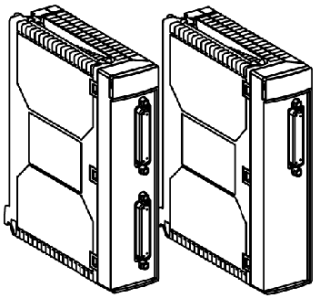

Illustration: screw terminal block connectors

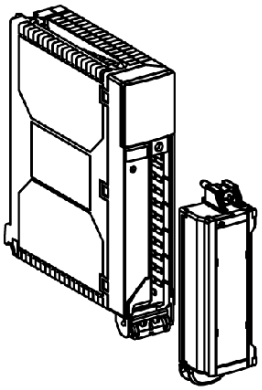

General introduction to TSX CTY/CCY counting modules

General points

Premium and Atrium PLCs offer main counting functions (down-counting, up-counting, up/down counting) from the application-specific "counting" modules.

Three modules are offered:

- a 2-channel module and a 4-channel module for the incremental encoder, with a maximum reading frequency of 40 kHz,
- a 2-channel module for:
  - incremental encoder, with a maximum reading frequency of 500 kHz,
  - absolute SSI series encoder, with a maximum reading frequency of 2 MHz.

Illustration

Illustration of different types of TSX CTY/CCY counting modules:

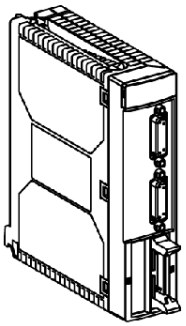

2-channel module

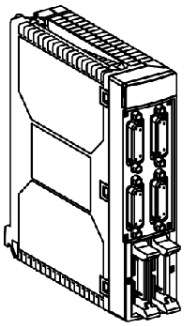

4-channel module

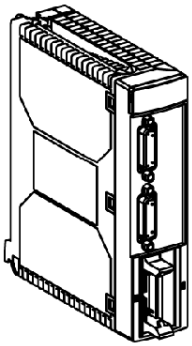

2-channel module (incremental encoder/absolute series encoder).

Introduction to Axis Control Modules

General

Using the application-specific "axis control" modules, Premium PLCs can be used to manage movement control applications, driven by servomotors and with an analog value speed setpoint (+/- 10V).

Five modules are offered:

Module	Characteristics
2 channels	allows controlled positioning with two independent, linear, limited axes.
2 channels	allows controlled positioning with two independent, circular, infinite axes.
4 channels	allows controlled positioning with four independent, linear, limited axes.
4 channels	allows controlled positioning with four independent, circular axes.
3 channels	allows positioning on 2 or 3 synchronized axes (linear interpolation).

Illustration

Illustration of different types of axis control modules:

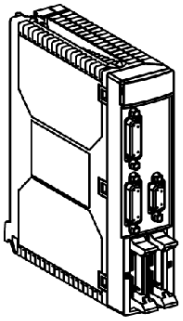

2-channel module

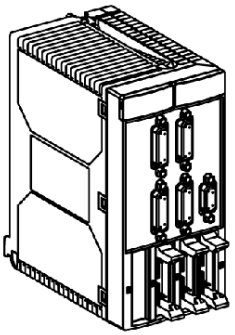

4-channel module

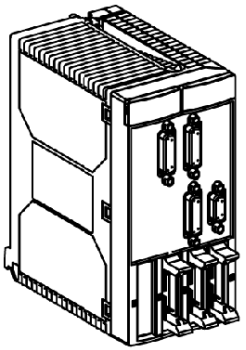

3-channel module

General introduction to step by step command modules

General

Using application-specific "step by step command" modules, Premium and Atrium PLCs can be used to manage movement control modules, controlled by translators with a frequency speed setpoint.

Two modules are offered:

- a 1-channel module which is used to control a translator,
- a 2-channel module which is used to control two translators,

Illustration

Illustration of different types of module:

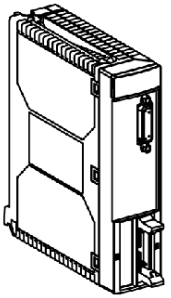

1-channel module

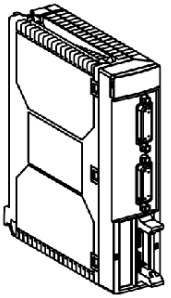

2-channel module

General introduction to communication

General

Different modes of communication can be used with Premium and Atrium PLCs:

- **terminal port communication:**
  - on TSX P57/TSX H57 Premium Processors: these have two terminal ports (TER) and (AUX), a non-insulated RS 485 serial link, Uni-Telway or character mode protocol,
  - on a TSX PCI 57 Atrium processor: these have one terminal port (TER), a non-insulated RS 485 serial link, Uni-Telway or character mode protocol,
- **master Fipio communication, built-in to some processors**,
- **Ethernet communication, built-in to some processors,**
- **communication via the USB port, built-in to some processors,**
- **communication by means of PCMCIA cards which can be built into the processor or the application-specific communication module TSX SCY 21601**: the processors and the application-specific communication module TSX SCY 21601 have a slot which is used for accommodating an extended type III PCMCIA communication card,
- **communication via application-specific modules**:
  - TSX SCY 21601 module,
  - TSX ETY 110 module.

Illustrations

The following table illustrates the different modes of communication:

Illustration	Description
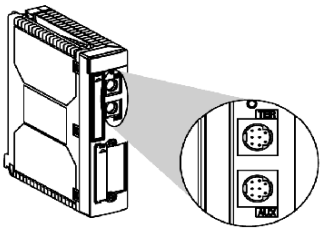	TER and AUX ports on TSX P57 processors.
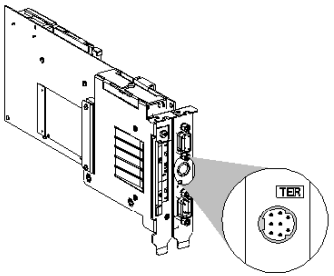	TER and AUX ports on TSX PCI 57 processors.
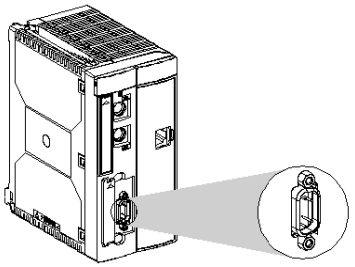	Fipio link on TSX P57 processors.
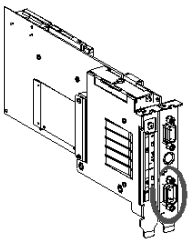	Fipio link on TSX PCI 57 processors.

Illustration	Description
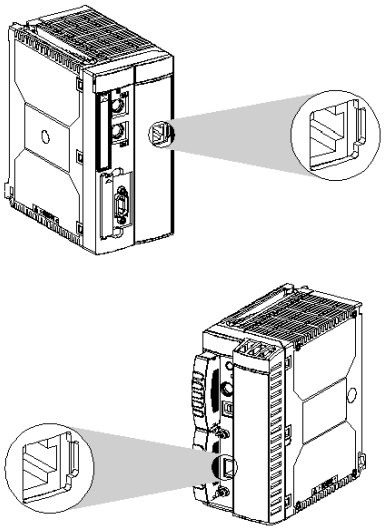	Ethernet link on TSX P57 processors.
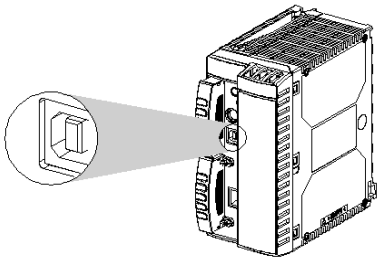	USB link on TSX P57/TSX H57 processors.
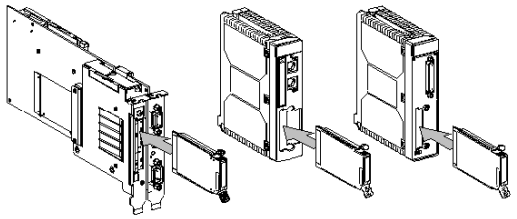	Communication by means of PCMCIA cards which can be built in to the processor or the module.

Illustration	Description
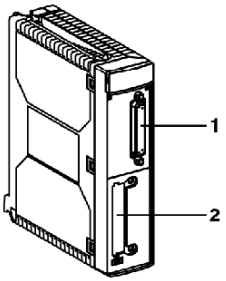	Communication via application-specific module TSX SCY 21601: ● 1 : built-in communication channel. ● 2 : slot for PCMCIA card.
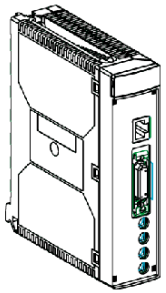	Communication via application-specific module TSX ETY 110.

General introduction to the AS-i bus interface module: TSX SAY 100

General

This is a module which is used to connect an AS-i bus to a Premium or Atrium PLC station.

This master module manages and coordinates bus access. It transmits data to all the slaves and receives data from them.

Illustration

Illustration of the module:

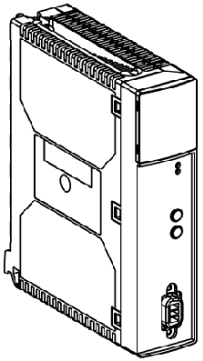

General introduction to the TSX ISPY weighing module

General

Using the TSX ISPY 101 and TSX ISPY 101 application-specific "weighing" modules. Premium PLCs can be used to manage weighing applications: dosage, multi-product dosage, grading, flow control, weight totalizer, etc.

This module offers a measurement input for a maximum of 8 sensors, 2 rapid discrete outputs and a serial link for a displayed report.

Illustration

Illustration of the TSX ISPY 100/101 module:

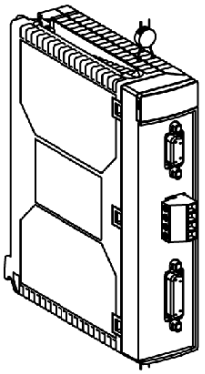

General introduction to the emergency stop monitoring module

General

This is a module with a built-in safety device, designed to control machine emergency stop circuits with the utmost safety.

These modules are used to cover safety functions up to category 4 according to the EN 954-1 standard.

Two modules are offered:

- 1 module consisting of 12 inputs and 2 outputs,
- 1 module consisting of 12 inputs and 4 outputs.

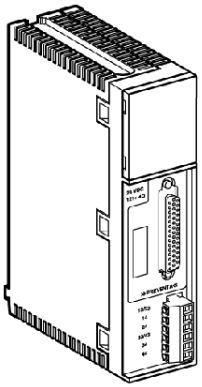

General introduction to the TSX FAN ventilation module

General

Depending on the rack modularity (4, 6, 8 or 12 positions), one, two or three ventilation modules can be installed above each rack to help cool the different modules by forced convection.

These ventilation units should be used in the following scenarios:

- **Ambient temperature in the 25°C...60°C range**,
- **Ambient temperature in the 60°C70°C range**.

Three types of ventilation module are offered:

- ventilation module with 110 VAC power supply,
- ventilation module with 220 VAC power supply,
- ventilation module with 24 VDC supply,

See *Ventilation module, page 423*.

Illustration

Illustration of the TSX FAN ventilation module:

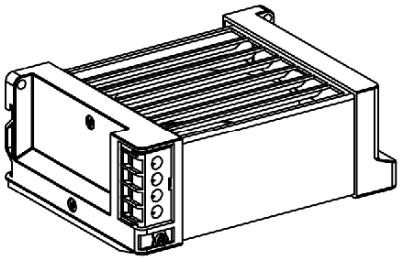

Chapter 3
General introduction to the different configurations of a PLC station

Subject of this Chapter

This chapter gives a general introduction to the different configurations which are possible for Premium and Atrium PLC stations.

What Is in This Chapter?

This chapter contains the following topics:

Topic	Page
Different Types of Premium PLC Stations	46
Different Types of PLC Station with Atrium Processors	49

Different Types of Premium PLC Stations

General Points

The choice of rack and processor type defines the maximum capacities of a Premium PLC station.

TSX P57 stations are composed of TSX P57 104/1634/154/0244 processors and TSX P57 204/254/2634/2834/304/354/3634/454/4634/554/5634/6634.

TSX H57 stations are composed of TSX H57 24M and TSX H57 44M.

TSX P57 0244 station

TSX P57 0244 processor in simple version with the CANopen TSX CPP 110 card:

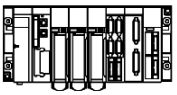

Station with standard rack:
1 rack, 6, 8 or 12 positions.

Station with
extendable
racks:
1 rack, 4, 6, 8 or 12
positions.

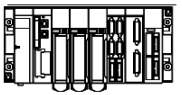

TSX P57 0244 processor in configuration version:

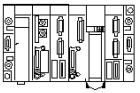

Station with
1 standard rack 6 positions
1 alternating or direct current power supply
1 TSX CPP 110 card
1 TSX CTY 2A counting module

TSX P57 10 station

Without X-Bus extension module:

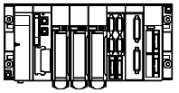

Station with standard rack:
1 rack, 6, 8 or 12 positions.

Station with
extendable
racks:
2 racks 12 positions
or
4 racks 4, 6 or 8
positions,
maximum length of
X-Bus: 100 meters

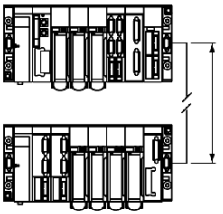

With X-Bus extension module:

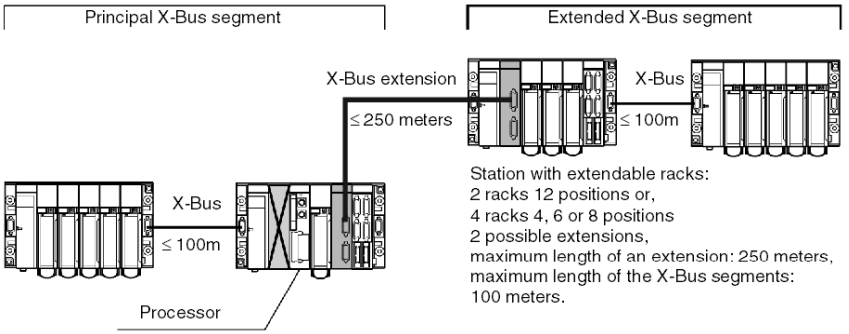

TSX 57 20/30/40/50/60 station

Without X-Bus extension module:

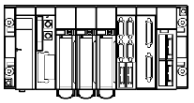

Station with standard rack:
1 rack, 6, 8 or 12 positions.

Station with extendable racks:
8 racks 12 positions or,
16 racks 4, 6 or 8 positions,
maximum length of X-Bus: 100 meters

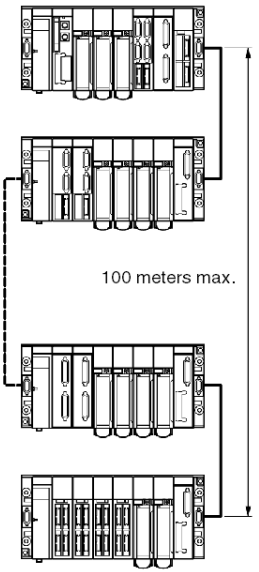

With X-Bus extension module:

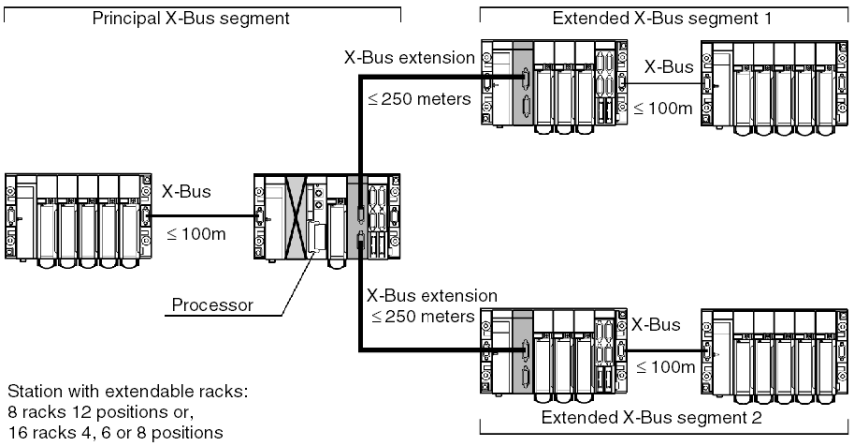

Station with extendable racks:
8 racks 12 positions or,
16 racks 4, 6 or 8 positions
2 possible extensions,
maximum length of an extension: 250 meters,
maximum length of the X-Bus segments:
100 meters.

TSX H57 24M/44M station

With X-Bus extension module:

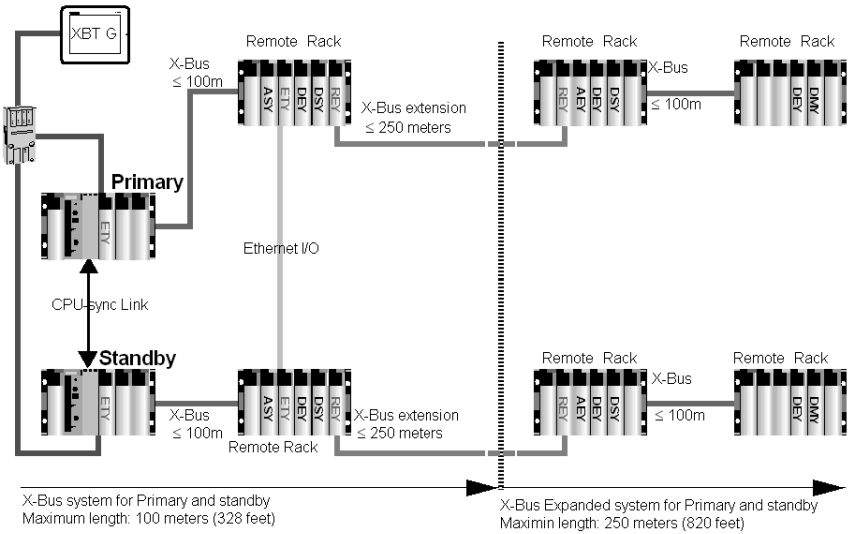

Different Types of PLC Station with Atrium Processors

General Points

The choice of the TSX PCI 204/354 processor type defines the maximum capacities of an Atrium PLC station.

This type of station, with the processor integrated in a PC, will be controlled with extendable racks.

Station TSX PCI 57 204

Without X-Bus extension module:

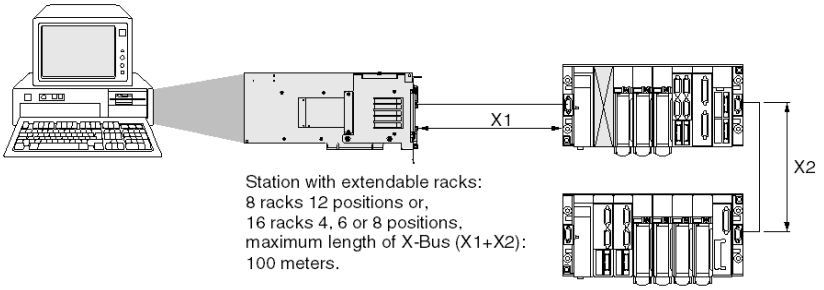

With X-Bus extension module:

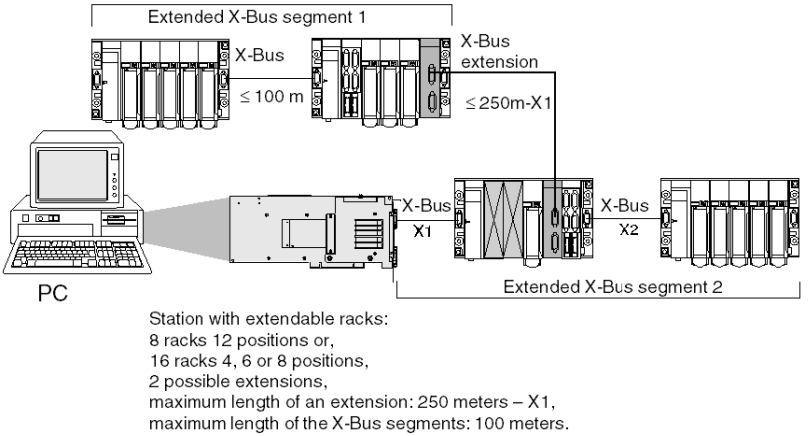

Station TSX PCI 57 354

Without X-Bus extension module:

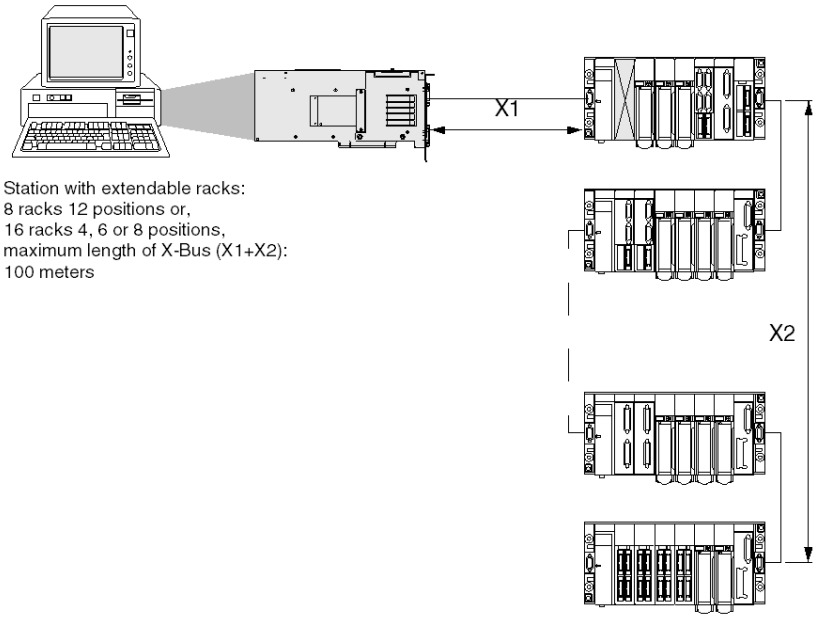

With X-Bus extension module:

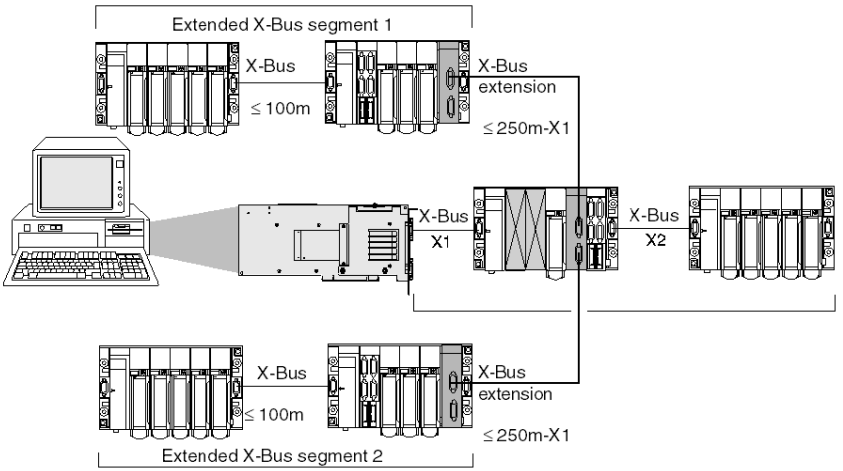

Station with extendable racks:
8 racks 12 positions or,
16 racks 4, 6 or 8 positions,
2 possible extensions,
maximum length of an extension: 250 meters – X1
maximum length of the X-Bus segments: 100 meters

Chapter 4
General introduction to PLC networks

Subject of this Chapter

The aim of this chapter is present PLC networks in general terms.

What Is in This Chapter?

This chapter contains the following topics:

Topic	Page
General introduction to the Modbus bus	54
General introduction to a Modbus Plus network	55
General introduction to a Fipway network	56
General introduction to an Ethernet network	57
General introduction to communication by modem	58
General introduction to the Uni-Telway Bus	59
General introduction to Fipio field bus	60
General Introduction to CANopen Field Bus	61
Introduction to AS-i Bus	63
General introduction to Profibus DP field bus	64
General introduction INTERBUS field bus	65
Presentation of the Jnet network	67

General introduction to the Modbus bus

General

Communication via Modbus is used to exchange data between all the devices connected to the bus. The Modbus protocol is a protocol which creates a tiered structure (a master and several slaves).

The master manages all the exchanges according to two types of dialog:

- the master exchanges with the slave and awaits the reply,
- the master exchanges with all the slaves without awaiting a reply (general broadcast).

Illustration

Modbus network:

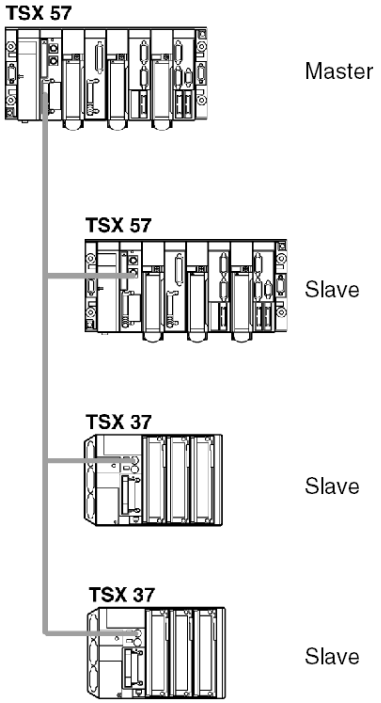

General introduction to a Modbus Plus network

General

Communication via Modbus Plus is used to exchange data between all the devices connected to the network.

The Modbus Plus protocol is based on the principle of Logical Token passing. Each station on a given network is identified by an address beween 1 and 64 and each station accesses the network after receiving a token. Duplicate addresses are not valid.

Illustration

The following illustration shows a network on Modbus Plus:

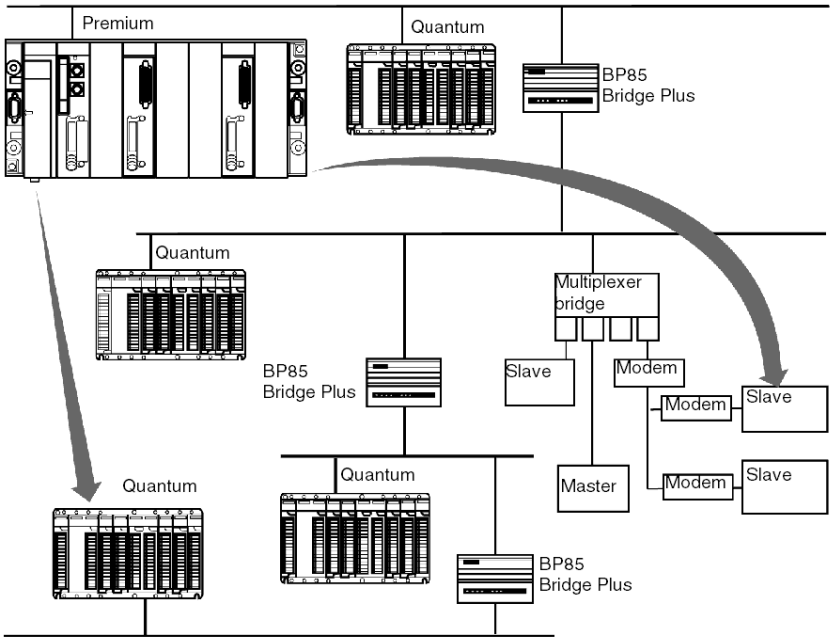

General introduction to a Fipway network

General

To enable decentralization of the periphery, intelligence and services over long distances, Schneider Electric proposes the Fipway industrial LAN.

The Fipway network is totally compliant with the FIP standard including access by a bus arbiter.

A Fipway communication channel features three elementary functions:

- the inter-station messaging function which provides routing of messages,
- the telegram transmit/receive function,
- the shared table or common word (%NW) production/consumption function.

Illustration

The following illustration shows a Fipway network:

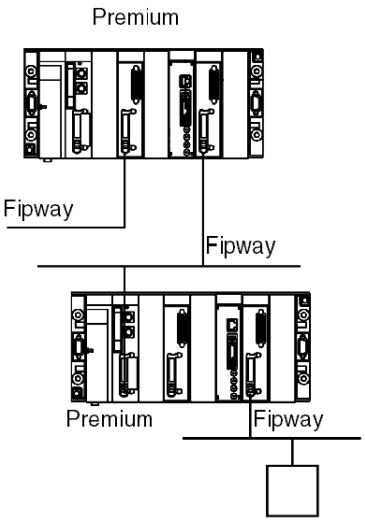

General introduction to an Ethernet network

General

Ethernet communication mainly addresses applications relating to:

- co-ordination between PLCs,
- local or centralized supervision,
- communication with production management applications,
- communication with remote Inputs/Outputs.

Two communication profiles are supported by Ethernet network modules:

- the ETHWAY profile which includes all the mechanisms of the X-Way communication architecture:
  - X-Way addressing system,
  - UNI-TE messaging,
  - distributed database (common words),
- the TCP/IP profile over Ethernet enabling communication:
  - in UNI-TE messaging mode with all of the X-Way architecture,
  - in Modbus messaging mode.

Acting as agents, Ethernet network modules also support management of the SNMP network supervision standard.

Illustration

Ethernet network:

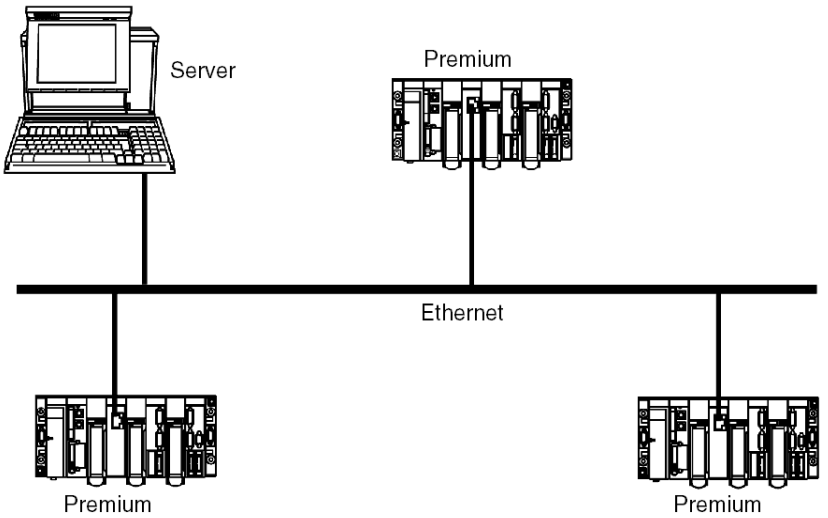

General introduction to communication by modem

General

Applications can be involved in communication via modem.

This type of communication allows remote stations to be accessed via the switched public telephone network in order to perform remote monitoring, diagnostics or control.

NOTE: Schneider has not developed a modem card for its PLCs. It is the responsibility of the user to implement this type of solution.

Illustration

Example of communication by modem and the different services available:

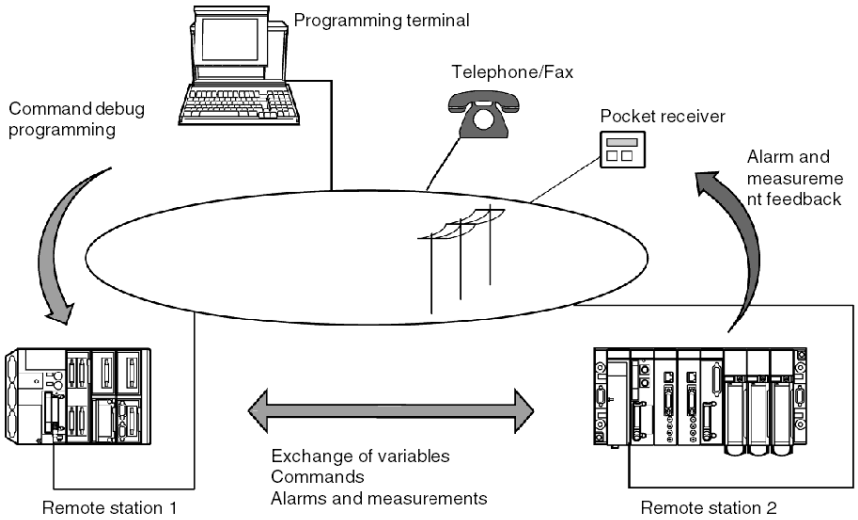

General introduction to the Uni-Telway Bus

General

Communication via Uni-Telway is used to exchange data between all the devices connected onto the bus. The Uni-Telway standard is a UNI-TE protocol which creates a tiered structure (a master and several slaves). The master device is the bus driver.

Uni-Telway enables equal-access type communication and supports the sending of messages from:

- master to slave,
- slave to master,
- slave to slave.

Illustration

Uni-Telway Bus:

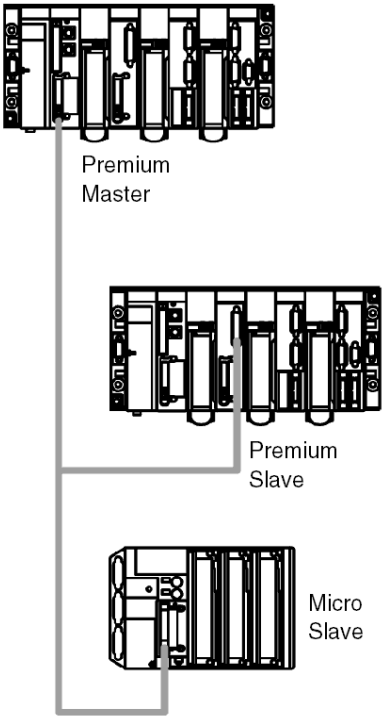

General introduction to Fipio field bus

General

Communication via Fipio is part of Schneider Electric's WORLDFIP global offer.

Fipio is a field bus used to de-localize the Inputs/Outputs of a PLC station and its industrial periphery to bring them as close as possible to the operating part.

The Fipio protocol is based on producer/consumer type exchanges (for instance: common words) and bus management is performed by a bus arbiter.

Illustration

The following illustration shows a Fipio field bus:

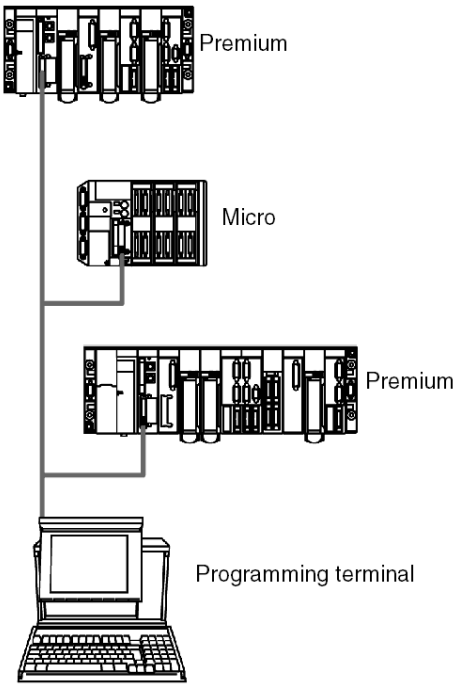

General Introduction to CANopen Field Bus

General Points

Originally developed for onboard automobile systems, the CAN communication bus is now used in many fields, including:

- Transport,
- Mobile devices,
- Medical equipment,
- Construction,
- Industrial control.

The strong features of the CAN system are:

- The bus allocation system,
- Error detection,
- Reliability of data exchanges.

A CANopen architecture includes:

- A bus master (TSX CPP 110 PCMCIA card),
- Slave devices, also called nodes.

Illustration

The following illustration shows a CANopen field bus architecture:

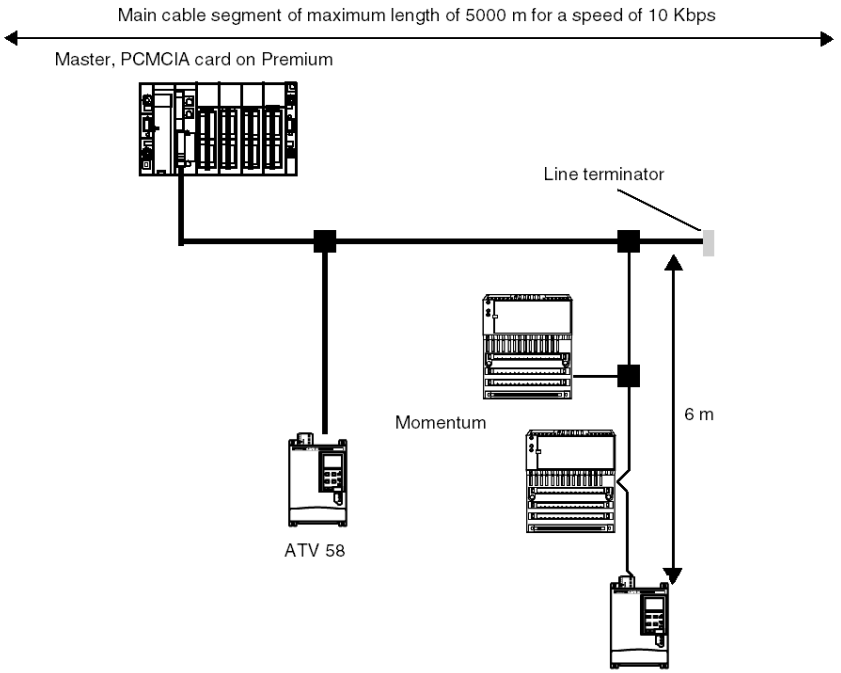

Introduction to AS-i Bus

General

The AS-i Bus (Actuator Sensor-Interface) is used to interconnect sensors/actuators at the lowest level of automation, via a single cable.

These sensors/actuators shall be defined in the documentation as **slave devices**.

Illustration

AS-i Bus:

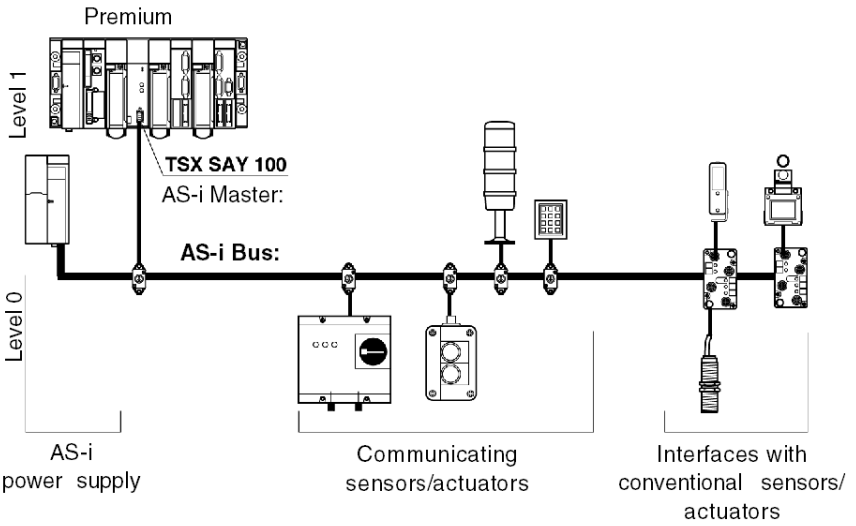

General introduction to Profibus DP field bus

General

Profibus DP is a serial link field bus for sensors and actuators meeting the requirements of an industrial environment.

This bus uses the master/slave process. The master device manages and coordinates access to the bus, and sends and receives data to and from all other devices.

Other devices such as Input/Output modules are also available:

- Classic TIO compact slaves,
  - classic discrete inputs,
  - classic discrete outputs.
- DEA203 modular slaves,
- Momentum modular slaves,
  - discrete inputs,
  - discrete outputs,
  - discrete inputs/outputs,
  - analog inputs/outputs.

Illustration

The following illustration shows a Profibus DP field bus:

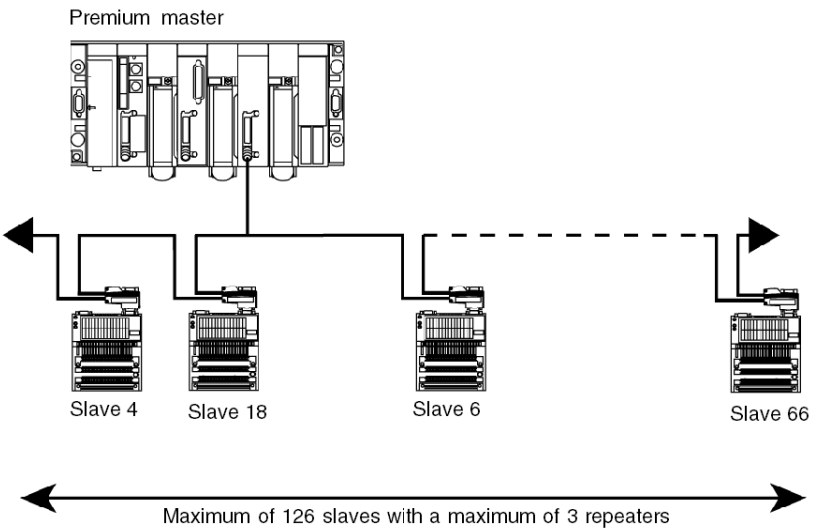

General introduction INTERBUS field bus

General

INTERBUS is a serial link field bus for sensors and actuators meeting the requirements of an industrial environment.

This bus uses the master/slave process. The master device manages and coordinates access to the bus. It sends and receives data to and from all other devices.

Other devices are also available in the following categories:

- head-ends,
- Input/Output modules,
- INTERBUS / AS-i gateways,
- AS-i Controller / gateways,
- ATV 18, 58, 66 speed controllers
- ATS46/NEPTUNEs,
- LT6 electrical protection systems,
- XBT BB LED keyboard terminals,
- XBT-P/E operating terminals,
- inductive identifications,
- IP20 Telefast I/O interfaces,
- Momentums,

Illustration

The following illustration shows an INTERBUS field bus architecture:

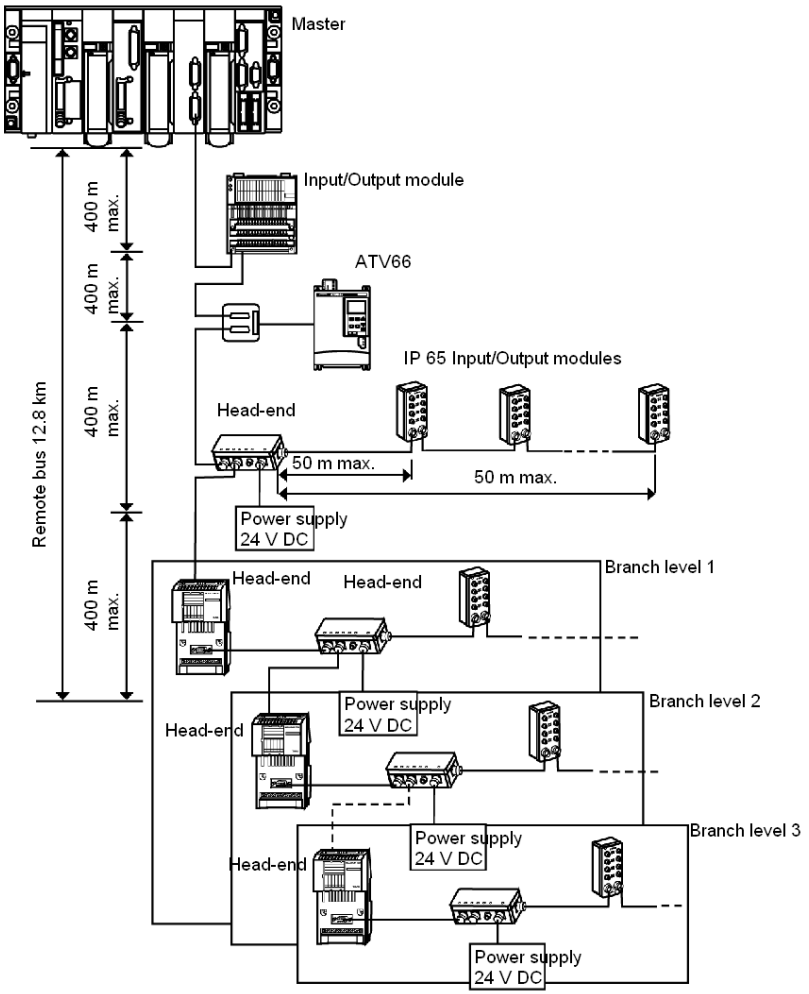

Presentation of the Jnet network

At a Glance

Premium/Atrium PLCs are connected to Jnet networks via a PCMCIA card.

Jnet networks are used to exchange data between Premium/Atrium PLCs and series 1000 April PLCs and SMC 500/600 PLCs.

A bus-type topology and deterministic token passing communication protocol are used.

The words exchanged make up a table. This table is stored in each PLC, and is broken down into as many zones as there are PLCs on the Jnet network. The zone assigned to each PLC may vary in size (defined on configuration).

Main characteristics

The characteristics are as follows:

- **Compatibility**: April 2000/3000/5000/7000 - SMC50/600
- **Number of PLCs**: Maximum 32 (16 for an SMC-type network)
- **Fixed transmission speed**: 19200 Bauds
- **Fixed transmission format**: 8 bits, no parity, 1 stop
- **Data transmitted**: Maximum 128 words, shared between all PLCs (max. 64 words for a SMC-type network)
- **Transmission media**: Current loop or 2-wire RS485

NOTE: Jnet documentation is only available on the Technical documentation CD-ROM.

NOTE: Premium PLCs using Control Expert are connected to a Jnet network in very specific cases, on existing installations. Given that the functionalities are the same as for PL7, the documentation remains in PL7 format. You must therefore adapt it for use in a Control Expert environment.

Chapter 5
Operating Standards and Conditions

Aim of this Chapter

This chapter deals with the operating standards and conditions of Premium and Atrium PLCs.

What Is in This Chapter?

This chapter contains the following topics:

Topic	Page
Standards and Certification	70
Operating conditions and environmental conditions to be avoided	71
Premium PLC protection processing	76

Standards and Certification

General

Premium and Atrium PLCs have been developed to conform to the principal national and international standards for industrial electronic PLC equipment.

- Programmable PLCs: specific requirements: functional characteristics, resistance, safety etc. IEC 61131-2, CSA 22.2 N° 142, UL 508
- Merchant navy requirements of the major international organizations: ABS, BV, DNV, GL, LROS, RINA, RRS, CCS etc.
- Adhering to European Directives:
  Low Voltage: 73/23/EEC amendment 93/68/EEC
  Electromagnetic Compatibility: 89/336/EEC amendments 92/31/EEC and 93/68/EEC
- Electric qualities and self-extinguishability of insulating materials: UL 746C, UL 94
- Danger Zones Cl1 Div2 CSA 22.2 N° 213

⚠ DANGER

RISK OF ELECTRIC SHOCK, EXPLOSION

Do not disconnect while circuit is live unless area is known to be non-hazardous.

This equipment is suitable for use in class i, division 2,Groups a, b, c and d or non-hazardous locations only.

Failure to follow these instructions will result in death or serious injury.

Operating conditions and environmental conditions to be avoided

Operating temperature/hygrometry/altitude

Data table:

Ambient temperature when operative	0°C to +60°C (IEC 1131-2 = +5°C to +55°C)
Relative humidity	10% to 95% (without condensation)
Altitude	0 to 2000 meters

Power supply voltages

Data table:

Voltage	nominal	24 VDC	48 VDC	100 to 240VAC	100...120/200...240 VAC
	limit	19 to 30 VDC	19...60VDC (1)	90 to 264 VAC	90 to 140/190 to 264VAC
Frequency	nominal	-	-	50/60 Hz	50/60 Hz
	limit	-	-	47/63 Hz	47/63 Hz
Brown-outs	duration	≤ 1 µs	≤ 1 µs	≤ 1/2 period	≤ 1/2 period
	repetition	≥ 1 s	≥ 1 s	≥ 1 s	≥ 1 s
Harmonic rate		-	-	10%	10%
Residual ripple included		5%	5%	-	-

(1) Possible up to 34 VDC, limited to 1 hour every 24 hours.

For TSX PSY 1610 and TSX PSY 3610 power supplies, and when using relay output modules, this scope is reduced to 21.6V...26.4V.

Human and material safety

Data table:

Test Designation	Norms	Levels	
Dielectric rigidity and Isolation resistance *	IEC 61131-2 UL 508 CSA 22-2 N°142 IEC 60950	24 - 48 V Power supply 100 -220 V Power supply < 48V Discrete I/Os > 48V Discrete I/Os > 10 MΩ	1500 Vrms 2000 Vrms 500 Vrms 2000 Vrms
Maintaining ground connections*	IEC 61131-2 UL 508 CSA 22-2 N°142	< 0.1 Ω / 30 A / 2 min	
Leakage Current *	CSA 22-2 N°142 IEC 60950	< 3.5 mA fixed device	
Enclosures for protection *	IEC 61131-2 CSA 22-2 N°142 IEC 60950	IP 20	
Impact Resistance	CSA 22-2 N°142 IEC 60950	Drop / 1.3 m / 500 g Sphere	
Legend			
*: Tests required by EC directives			

NOTE: The devices must be installed and wired according to the directions in the TSX DG KBL• manual.

Resistance of devices to power supply L.F. turbulence

Data table:

Test Designation	Norms	Levels
Voltage and frequency Variation *	EN 50082-1	Un 15% / Nf 5% 30 min x 2 Un 20% / Nf 10% 5 s x 2
Continuous voltage variation *	EN 50082-1	0.85 Un - 1.2 Un 30 + 30 min + 5% ripple maximum
Harmonic 3 *	IEC 61131-2	10% Un 0° / 5 min - 180° / 5 min
Legend		
Un: Nominal Voltage **Nf:** Nominal Frequency **Ud:** Power-on detection level		
*: Tests required by EC directives		

Test Designation	Norms	Levels
Momentary Interruptions *	IEC 61131-2	AC 10 ms DC 1 ms
Voltage peaks and troughs *	IEC 61131-2	Un-0-Un; Un / 60s 3 cycles separated by 10 s Un-0-Un; Un / 5s 3 cycles separated by 1 to 5 s Un-0.9-Un; Un / 60s 3 cycles separated by 1 to 5 s
Legend		
Un: Nominal Voltage **Nf:** Nominal Frequency **Ud:** Power-on detection level		
*: Tests required by EC directives		

NOTE: The devices must be installed and wired according to the directions in the TSX DG KBL• manual.

Resistance to H.F. turbulence

Data table:

Test Designation	Norms	Levels
Amortized oscillatory wave *	IEC 61131-2 IEC 61000-4-12	AC / DC 1 kV SM 24 V Discrete I/Os 1 kV SM
Fast transients (bursts) *	EN 50082-1 IEC 61000-4-4	AC / DC Power Supply 2 kV WM / CM 48 V > Discrete I/Os 2 kV CM other ports 1 kV CM
Hybrid shockwave	IEC 61000-4-5	AC / DC Power Supply 2 kV WM / 1 kV SM AC Discrete I/Os 2 kV WM / 1 kV SM DC Discrete I/Os 2 kV WM / 0.5 kV SM Shielded Cable 1 kV CM
Electrostatic Discharge *	IEC 61131-2 IEC 61000-4-2	6 kV contact 8 kV air
Electromagnetic Field *	EN 50082-2 IEC 61000-4-3	10 V/m, 80MHz - 2 GHz Sinusoidal modulation amplitude 80% / 1kHz
Conduit Turbulence *	EN 50082-2 IEC 61000-4-6	10 V 0.15 MHz - 80 MHz Sinusoidal modulation amplitude 80% / 1kHz
Legend		
SM: Serial mode **CM:** Common Mode **WM:** Wire Mode		
*: Tests required by EC directives		

NOTE: The devices must be installed and wired according to the directions in the TSX DG KBL• manual.

Electromagnetic Emissions

Data table:

Test Designation	Norms	Levels
Conduction Limits *	EN55022/55011 EN50081-2	Class A 150 kHz - 500 kHz quasi-peak 79 dB mV average 66 dB mV 500 kHz -30 kHz quasi-peak 73 dB mV average 60 dB mV
Emission Limits *(1)	EN55022/55011 EN50081-2	Class A d = 10 m 30 kHz -230 kHz quasi-peak 30 dB mV/m 230 kHz -1 kHz quasi-peak 37 dB mV/m
Legend		
(1) This test is carried out outside the casing, with the devices secured to a metallic grill and wired as shown in the TSX DG KBL• Manual.		
*: Tests required by EC directives		

NOTE: The devices must be installed and wired according to the directions in the TSX DG KBL• manual.

Resistance to climatic variation

Data table:

Test Designation	Norms	Levels
Dry heat	IEC60068-2-2 Bd	60°C / 16h (E.O) 40°C / 16h (E.F)
Cold	IEC60068-2-1 Ad	0°C / 16h
Continuous humid heat	IEC60068-2-30 Ca	60°C / 93% Hr /96h (E.O) 40°C / 93% Hr /96h (E.F)
Cyclical humid heat	IEC60068-2-30 Db	(55°C E.O / 40°C E.F); - 25°C / 93-95% Hr 2 cycles: 12 o' clock - 12h o' clock
Cyclical temperature variations	IEC60068-2-14 Nb	0°C; -60°C / 5 Cycles: 6 o'clock-6 o'clock (E.O.) 0°C; -40°C / 5 Cycles: 6 o'clock-6 o'clock (E.F)
Temperature Rise	IEC61131-2 UL508 CSA22-2 N°142	Ambient temperature: 60°C
Legend		
E.O: Device open **E.F:** Device closed **Hr:** Relative Humidity		

Resistance to mechanical constraints

Data table:

Test Designation	Standards	Levels
Sinusoidal vibrations	IEC60068-2-6 Fc	3 Hz - 100 Hz / 1 mm amplitude / 0.7 Gn Endurance: rf / 90 min / axis (Q limit) < 10 3 Hz - 150 Hz / 1.5 mm / 2 Gn Endurance: 10 cycles (1 octave / min)
Half-sinus shocks	IEC60068-2-27 Ea	15 Gn x 11 ms 3 shocks / direct. / axis
Legend		
rf: Resonance Frequency **Q:** Amplification Coefficient		

Resistance to climatic variation

Data table:

Test Designation	Standards	Levels
Dry heat whilst inoperative	IEC60068-2-2 Bb	70°C / 96h
Cold whilst inoperative	IEC60068-2-1 Ab	-25°C / 96h
Humid heat whilst inoperative	IEC60068-2-30 dB	60°C; - 25°C / 93-95% Hr 2 cycles: 12 o' clock - 12h o' clock
Thermal shocks whilst inoperative	IEC60068-2-14 Na	-25°C; -70°C / 2 Cycles: 3 o'clock - 3 o'clock

Resistance to mechanical constraints

Data table:

Test Designation	Standards	Levels
Flat free drop	IEC60068-2-32 Ed	10 cm / 2 drops
Free drop from controlled position	IEC60068-2-31 Ec	30° or 10 cm / 2 drops
Random free drop (conditioned material)	IEC60068-2-32 Method 1	1 m / 5 drops

Premium PLC protection processing

General points

PLCs in the Premium and Atrium range meet **AP** (all-climate processing) processing requirements.

For installations used in industrial production workshops or in environments which come under the title **HP** (processors in heat and humidity) processing, the Premium PLCs must be inserted into a protection casing (minimum IP54 as outlined by standards IEC 60664 and NF C 20 040).

Premium PLCs have an IP20 protection index. They can thus be installed without a protection casing in restricted-access areas which do not exceed Pollution Degree 2 (control room free of machines or any activity creating dust).

The Atrium card is designed for integration into a host PC. The host device must therefore conform to the IP20 protection index.

⚠ CAUTION

RISK OF LOSS OF IP20 PROTECTION INDEX

For a rack to conform to the IP20 protection index, the unoccupied module slots must be protected by a TSX RKA 02 protection cover.

Failure to follow these instructions can result in injury or equipment damage.

Part II
TSX P57/TSX H57 Premium processors

Subject of this Part

The aim of this part is to describe the Premium TSX P57/TSX H57 processors and their installation.

What Is in This Part?

This part contains the following chapters:

Chapter	Chapter Name	Page
6	TSX P57/TSX H57 processors: introduction	79
7	TSX P57/TSX H57 processors: installation	95
8	TSX P57/TSX H57 processors: diagnostics	115
9	TSX P57 0244 processors	141
10	TSX P57 104 processors	143
11	TSX P57 154 processors	145
12	TSX P57 1634 processors	147
13	TSX P57 204 processors	149
14	TSX P57 254 processors	151
15	TSX P57 2634 processors	153
16	TSX P57 304 processors	155
17	TSX P57 354 processors	157
18	TSX P57 3634 processors	159
19	TSX P57 454 processors	161
20	TSX P57 4634 processors	163
21	TSX P57 554 processors	165
22	TSX P57 5634 processors	167
23	TSX P57 6634 processors	169
24	TSX H57 24M processors	171
25	TSX H57 44M processors	173
26	Premium TSX P57/TSX H57 processor: general characteristics	175
27	Processor performance	181

Chapter 6
TSX P57/TSX H57 processors: introduction

Aim of this Chapter

The aim of this chapter is to introduce the TSX P57/TSX H57 processors.

What Is in This Chapter?

This chapter contains the following topics:

Topic	Page
General Introduction	80
Physical Description of TSX P57/TSX H57 Processors	82
Real-time clock	85
Catalog of TSX 57 Processors	88
Size of Data on Premium and Atrium PLCs	93

General Introduction

Introduction

A wide range of TSX P57/TSX H57 processors of different levels of performance and specification are available to meet your various requirements.

General Points

TSX P57/TSX H57 processors can be integrated into TSX RKY... racks *(see page 358)*.

List of TSX P57/TSX H57 processors:

- TSX P57 0244, TSX P57 104, TSX P57 1634, TSX P57 154 processor
- TSX P57 204, TSX P57 254, TSX P57 2634 processor,
- TSX P57 304, TSX P57 354, TSX P57 3634 processor,
- TSX P57 454, TSX P57 4634 processor,
- TSX P57 554, TSX P57 5634 processor,
- TSX P57 6634 processor,
- TSX H57 24M, TSX H57 44M processor.

NOTE: Processors from families 20, 30, 40 and 50 have built-in process control functions.

Illustration

TSX P57/TSX H57 on a TSX RKY 8EX rack:

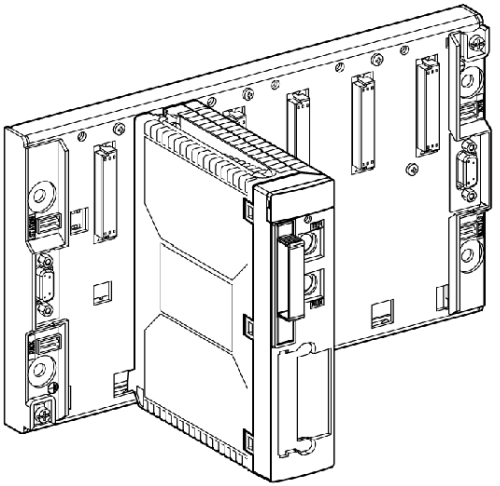

Functions

Premium TSX P57/TSX H57 processors manage a complete PLC station which is made up of:

- Discrete Input/Output modules,
- Analog Input/Output modules,
- Application-specific modules (i.e. counting, axis control, step by step control, communication, etc.),

which can be distributed over one or more racks connected to the X-Bus.

Table of TSX P57/H 57 Processors

All processors in the TSX P57/TSX H57 range can be found in the following table.

TSX Type	Physical format	Maximum number of discrete I/Os per rack	Maximum memory size			Built-in master Fipio link	Built-in Ethernet link
			Internal RAM	PCMCIA			
				Data	Program		
P57 0244 (1)	Single	256	96K8	96K8	128K8	-	-
P57 104	Single	512	96K8	96K8	224K8	-	-
P57 1634	Double	512	96K8	96K8	224K8	-	X
P57 154	Single	512	96K8	96K8	224K8	X	-
P57 204	Double	1024	160K8	160K8	768K8	-	-
P57 254	Double	1024	192K8	192K8	768K8	X	-
P57 2634	Double	1024	160K8	160K8	768K8	-	X
P57 304	Double	1024	192K8	192K8	1792K8	-	-
P57 354	Double	1024	224K8	224K8	1792K8	X	-
P57 3634	Double	1024	192K8	192K8	1792K8	-	X
P57 454	Double	2048	320K8	440K8	2048K8	X	-
P57 4634	Double	2048	320K8	440K8	2048K8	-	X
P57 554	Double	2048	1024K8	1024K8	7168K8	X	-
P57 5634	Double	2048	1024K8	1024K8	7168K8	-	X
P57 6634	Double	2048	640K8	896K8	4096K8	-	X
H57 24M	Double	1024	192K8	192K8	768K8	-	X
H57 44M	Double	2048	440K8	440K8	2048K8	-	X
Legend							
(1) processor also available in configuration *(see page 23)* version.							
X: available							
-: unavailable							

Physical Description of TSX P57/TSX H57 Processors

Illustration

These diagrams label the different components of a TSX P57/TSX H57 processor module (standard or double):

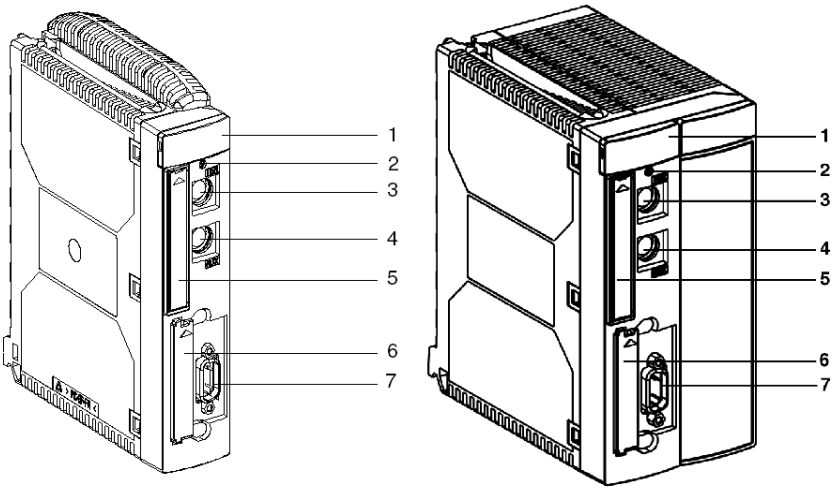

Standard format processor:
TSX P57 0244/104/154

Double format processor:
TSX P57 204/254/304/354/454

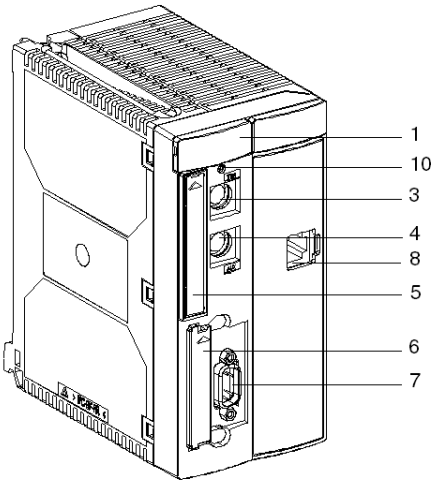

Double format processor:
TSX P57 1634/2634/3634/4634

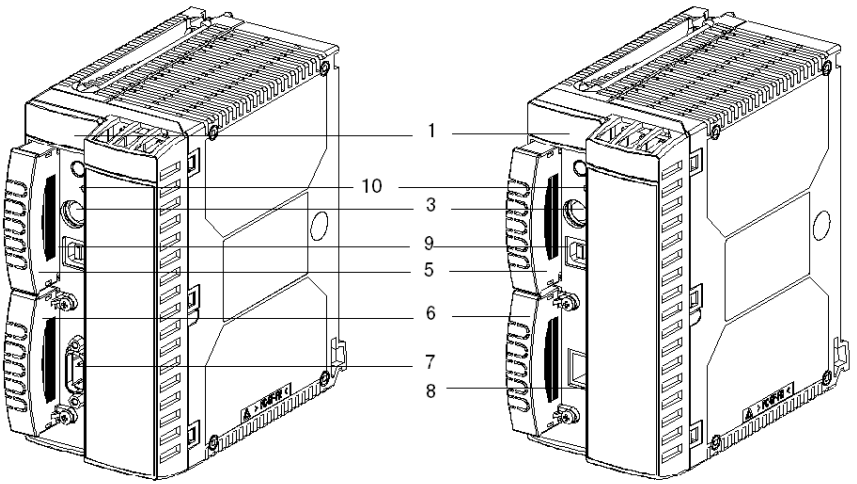

Double format processor:
TSX P57 554

Double format processor:
TSX P57 5634/6634
TSX H57 24M
TSX H57 44M

Description

This table describes the components of a processor module.

Number	Function
1	Display panel containing four or five LEDs.
2	Button for requesting extraction of PCMCIA card and storage of SRAM files. The button must be pressed before extracting the card, and a LED indicates the status of the request.
3	Terminal port (**TER Connector** (8-pin mini-DIN)): this is used to connect an FTX type or PC compatible terminal, or to connect the PLC to the Uni-Telway bus through the TSX P ACC 01 insulation unit. This connector is used to supply 5V to the peripheral which is linked to it (limited by the available current provided by the power supply).
4	Terminal port (**AUX Connector** (8-pin mini-DIN)): this is used to connect a peripheral with its own power supply (terminal, operator dialog console or printer (no voltage is supplied to this connector)).
5	Slot for a type 1 PCMCIA memory extension card. If there is no memory card, this slot is fitted with a cover which **must** be kept in place in order to protect the slot from dust. **Note:** On the card holder, the metallic contact has been removed.
6	Slot for a type 3 PCMCIA communications card which is used to link a Fipway, Fipio Agent, Uni-Telway, serial link, Modbus or Modbus Plus communication channel to the processor. This slot may also contain a SRAM file storage card (for TSX 57 554\5634\6634\24M\44M only). If there is no communications card, this slot is fitted with a cover. PCMCIA communication card isn't support for TSX H57 24M and 44M
7	9-pin SUB D connector for connecting a Fipio bus master. This connector is present only on TSX P57 •54 processors.
8	RJ 45 connector for Ethernet connection.
9	USB Port.
10	Recessed **RESET** button which when pressed causes a cold startup. ● **Processor working normally:** cold startup in **STOP** or **RUN** mode, depending on the procedure defined at configuration. ● **Processor error:** forced startup in **STOP** mode.

NOTE: The (**TER**) and (**AUX**) connectors offer master Uni-Telway connection mode at 19 200 bauds by default and can be configured for slave Uni-Telway or ASCII character mode.

Real-time clock

At a Glance

Each processor (Premium or Atrium) has a savable real-time clock which manages:

- the current date and time,
- the date and time of when the application last stopped.

The date and time are managed even when the processor is switched off, on condition that:

- the Premium processor is mounted on the rack with its power supply module in place and is equipped with a back-up battery,
- the Atrium processor is equipped with a back-up battery.

Current date and time

the processor keeps the current date and time up to date in the system words %SW49 to %SW53. This data is coded in BCD.

System words	Most significant byte	Least significant byte
%SW49	00	Days of the week from 1 to 7 (1 for Monday and 7 for Sunday)
%SW50	Seconds (0 to 59)	00
%SW51	Hours (0 to 23)	Minutes (0 to 59)
%SW52	Month (1 to 12)	Days of the month (1 to 31)
%SW53	Century (0 to 99)	Year (0 to 99)
%SW70		Week (1 to 52)

NOTE: %SW49 is read-only.

Accessing the date and time

The date and time can be accessed:

- via the processor debug screen,
- via the program:
  - **read:** system words %SW49 to %SW53, if the system bit %S50 = 0,
  - **immediate update:** write system words %SW50 to %SW53, if the system bit %S50 = 1,
  - **incremental update:** the system word %SW59 is used to change the date and time, field by field, from the current value, if the system bit %S59 = 1, or is used to carry out a global increment/decrement.

Bit value table:

bit0 = 1, increments the date and time globally (1)	**bit8** = 1, decrements the date and time globally (1)
bit1 =1, increments the seconds	**bit9** =1, decrements the seconds
bit2 =1, increments the minutes	**bit10** =1, decrements the minutes
bit3 =1, increments the hours	**bit11** =1, decrements the hours
bit4 =1, increments the days	**bit12** =1, decrements the days
bit5 =1, increments the months	**bit13** =1, decrements the months
bit6 =1, increments the years	**bit14** =1, decrements the years
bit7 =1, increments the centuries	**bit15** =1, decrements the centuries

(1) all fields are updated.

NOTE: The processor does not automatically manage the change between winter and summer time.

The date and time of when the application last stopped

The date and time of when the application last stopped are stored in BCD in the system words %SW54 to %SW58.

System words	Most significant byte	Least significant byte
%SW54	Seconds (0 to 59)	00
%SW55	Hours (0 to 23)	Minutes (0 to 59)
%SW56	Month (1 to 12)	Days of the month (1 to 31)
%SW57	Century (0 to 99)	Year (0 to 99)
%SW58	Day of the week (from 1 to 7)	Reason for the last application stop

- to access the date and time of the last application stop:
  read the system words %SW54 to %SW58,
- to find the reason for the last application stop:
  read the least significant byte of the system word %SW58 (value saved in BCD).

Table of %SW58 system words:

%SW58 = 1	application switched to STOP mode,
%SW58 = 2	application stopped due to a software error,
%SW58 = 4	power outage or power supply RESET button has been pressed
%SW58 = 5	stop due to hardware fault
%SW58 = 6	application stopped due to HALT instruction

Catalog of TSX 57 Processors

Catalog of TSX P570244/104/1634/154 Processors

The following table describes the main (maximum) characteristics of TSX P57 0244, TSX P57 104, TSX P57 1634 and TSX P57 154 processors.

Reference		TSX P 57 0244	TSX P 57 104	TSX P 57 1634	TSX P 57 154
Number of racks	TSX RKY 12 EX	1	2	2	2
	TSX RKY 4EX/6EX/8EX	1	4	4	4
Number of module slots	With TSX RKY 12 EX	10	21	21	21
	With TSX RKY 4EX/6EX/8EX	6	27	27	27
Number of channels	In-rack discrete I/O	256	512	512	512
	Analog I/O	12	24	24	24
	Expert (counting, axis, etc.)	4	8	8	8
Number of connections	Network (Fipway, ETHWAY/TCP_IP, Modbus Plus)	1	1	1	1
	Master Fipio, number of devices	-	-	-	63
	Ethernet	-	-	1	-
	Field bus (InterBus-S, Profibus)	0	0	0	0
	CANopen	1	1	1	1
	ASi sensor/actuator	1	2	2	2
Memory size	Internal	96K8	96K8	96K8	96K8
	Extension	128K8	224K8	224K8	224K8

Catalog of TSX P57204/254/2634 Processors

The following table describes the main (maximum) characteristics of TSX P57 204 and TSX P57 254, TSX P57 2634 processors.

Reference		TSX P 57 204	TSX P 57 254	TSX P 57 2634
Number of racks	TSX RKY 12 EX	8	8	8
	TSX RKY 4EX/6EX/8EX	16	16	16
Number of module slots	With TSX RKY 12 EX	87	87	87
	With TSX RKY 4EX/6EX/8EX	111	111	111
Number of channels	In-rack discrete I/O	1024	1024	1024
	Analog I/O	80	80	80
	Expert (counting, axis, etc.)	24	24	24
Number of connections	Network (Fipway, ETHWAY/TCP_IP, Modbus Plus)	1	1	1
	Master Fipio, number of devices	-	127	-
	Ethernet	-	-	1
	Field bus (InterBus-S, Profibus)	1	1	1
	CANopen	1	1	1
	ASi sensor/actuator	4	4	4
Memory size	Internal	160K8	192K8	160K8
	Extension	768K8	768K8	768K8

Catalog of TSX P57304/354/3634/454/4634 processors

The following table describes the main (maximum) characteristics of TSX P57 304, TSX P 57 354, TSX P57 3634, TSX P57 454 and TSX P57 4634 processors.

Reference		TSX P 57 304	TSX P 57 354	TSX P 57 3634	TSX P 57 454	TSX P 57 4634
Number of racks	TSX RKY 12 EX	8				
	TSX RKY 4EX/6EX/8EX	16 87				
Number of module slots	With TSX RKY 12 EX	111				
	With TSX RKY 4EX/6EX/8EX					
Number of channels	In-rack discrete I/O	1024	1024	1024	2048	2048
	Analog I/O	128	128	128	256	256
	Expert (counting, axis, etc.)	32	32	32	64	64
Number of connections	Network: Fipway, ETHWAY/TCP_IP, Modbus Plus	3	3	3	4	4
	Master Fipio, number of devices	-	127	-	127	-
	Ethernet	-	-	1	-	1
	Field bus (InterBus-S, Profibus)	3	3	3	4	4
	CANopen	1	1	1	1	1
	ASi sensor/actuator	8	8	8	8	8
Memory size	Internal	192K8	224K8	192K8	440K8	440K8
	Extended	1792K8	1792K8	1792K8	2048K8	2048K8

Catalog of TSX H57 24M/44M

The following table describes the main (maximum) characteristics of TSX H57 24M and TSX H57 44M processors.

Reference		TSX H57 24M	TSX H57 44M
Number of racks	TSX RKY 12 EX	8	
	TSX RKY 4EX/6EX/8EX	16	
Number of module slots	With TSX RKY 12 EX	87	
	With TSX RKY 4EX/6EX/8EX	111	
Number of channels	In-rack discrete I/O	1024	2048
	Analog I/O	80	256
	Expert (counting, axis, motion, weighing)	0	0
	Modbus	24	64
Number of connections	Network: FIPWAY, ETHWAY/TCP-IP, Modbus Plus.	0	
	Ethernet	2	4
	Field bus (InterBus-S, Profibus)	0	
	CANopen	0	
	ASi sensor/actuator	0	
Memory size	Internal	192K8	440K8
	Extended	768K8	2048K8

Catalog of TSX P57554/5634/6634 Processors

The following table describes the main (maximum) characteristics of the TSX P57 554 and TSX P 57 5634 processors.

Reference		TSX P 57 554	TSX P 57 5634	TSX P 57 6634
Number of racks	TSX RKY 12 EX	8	8	8
	TSX RKY 4EX/6EX/8EX	16	16	16
Number of module slots	With TSX RKY 12 EX	87	87	87
	With TSX RKY 4EX/6EX/8EX	111	111	111
Number of channels	In-rack discrete I/O	2048	2048	2048
	Analog I/O	512	512	512
	Expert (counting, axis, etc.)	64	64	64
Number of connections	Network: Fipway, ETHWAY/TCP_IP, Modbus Plus	4	4	4
	Master Fipio, number of devices	127		
	Ethernet		1	1
	Field bus (InterBus-S, Profibus)	5	5	5
	CANopen	1	1	1
	ASi sensor/actuator	8	8	8
Memory size	Internal	1024K8	1024K8	2048K8
	extension	7168K8	7168K8	4096K8

Size of Data on Premium and Atrium PLCs

At a Glance

The maximum size of located and unlocated data differs according to the processor.

Size of Located Data

Maximum Size of Located Data according to Processor Type:

Object type	Address	Max/default values for TSX P57 0244/104/154/1634	Max/default values for TSX P57 204/254/2634, TSX PCI 57 204, and TSX H57 24M	Max/default values for TSX P57 304/354/3634 and TSX PCI 57 354	Max/default values for TSX P57 454/4634 and TSX H57 44M	Max/default values for TSX P57 554/5634	Max/default values for TSX P57 6634
Internal bits	%Mi	3692/256	8056/512	16250/512	32634/512	32634/512	32634/512
Input/output bits	%I/Qr.m.c	(1)	(1)	(1)	(1)	(1)	(1)
System bits	%Si	128	128	128	128	128	128
Internal words	%MWi	32464/512	32464/1024	32464/1024	32464/1024	65232/2048	65232/2048
Constant words	%KWi	32760/128	32760/256	32760/256	32760/256	32760/256	32760/256
System words	%SWi	168	168	168	168	168	168

(1) depends on the declared hardware configuration (I/O modules, AS-interface devices).

Size of Unlocated Data

Maximum size of Unlocated Data according to Processor Type:

Object type	Size for TSX P57 0244/104/154/1634	Size for TSX P57 204/2634/254/304/354/3634 and TSX PCI 57 204/354	Size for TSX P57 454/4634/554/5634/6634 and TSX H57 24M/44M
Elementary Data Types (EDTs) Derived Data Types (DDTs)	Limited to 32 Kilobytes	Limited to 64 Kilobytes	Unlimited (1)
DFB and EFB function block data	The size of each instance is limited to 64 Kilobytes, the number of instances is unlimited (1)	The size of each instance is limited to 64 Kilobytes, the number of instances is unlimited (1)	The size of an instance and the number of instances are unlimited (1)

(1) The limit is defined according to the size of the PLC's internal memory *(see page 88)*.

Chapter 7
TSX P57/TSX H57 processors: installation

Aim of this Chapter

This Chapter deals with the installation of **TSX P57/TSX H57** processor modules and the **PCMCIA** extension card.

What Is in This Chapter?

This chapter contains the following topics:

Topic	Page
Positioning the processor module	96
How to mount processor modules	98
Installation of Modules next to TSX P57 0244/104/154 Processors	100
Standard Memory Cards for PLCs	101
Application\File and File Storage Type Memory Cards	104
Processing on insertion/extraction of a PCMCIA memory extension card on a Premium PLC	108
Mounting/Removing PCMCIA Memory Extension Cards on a TSX P57/TSX H57 Processor	110

Positioning the processor module

Introduction

There are two scenarios for the positioning of a processor module on a rack:

- positioning a standard format processor module,
- positioning a double format processor module.

Positioning a standard format processor module

A standard format processor module is always installed on the **TSX RKY..** rack with address 0 and in position 00 or 01 according to whether the rack is equipped with a standard or double format power supply module.

Rack with standard format power supply module: TSX PSY 2600/1610.

In this case, the processor module will be placed in position 00 (preferred position) or position 01. If the latter, position 00 must be unoccupied.

Illustration

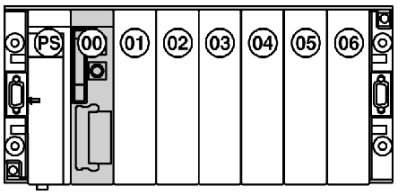

Rack with double format power supply module: TSX PSY 3610/5500/5520/8500.

In this case, the processor will be placed in position 01, as the power supply module occupies two positions (PS and 00).

Illustration

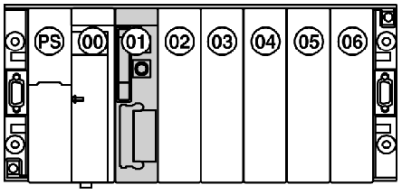

Positioning a double format processor module

A double format processor module is always installed on the **TSX RKY..** rack with address 0 and in positions 00 and 01 or 01 and 02 according to whether the rack is equipped with a standard or double format power supply module.

Rack with standard format power supply module: TSX PSY 2600/1610.

In this case, the processor module will be installed in positions 00 and 01 (preferred position) or in positions 01 and 02. If the latter, position 00 must be unoccupied.

Illustration

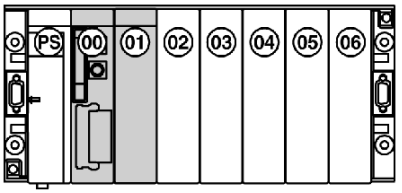

Rack with double format power supply module: TSX PSY 3610/5500/5520/8500.

In this case, the processor will be placed in positions 01 and 02, as the power supply module occupies two positions (PS and 00).

Illustration

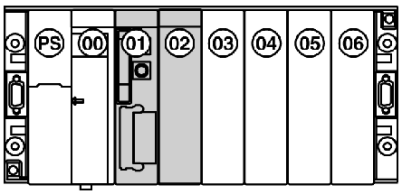

NOTE: The rack on which the processor is installed always has address 0.

How to mount processor modules

At a Glance

Mounting and removing processor modules is identical to mounting and removing other modules apart from the fact that **it must not be done when power is switched on**.

Installing a processor module onto a rack

Carry out the following steps:

Step	Action	Illustration
1	Place the pins at the back of the module into the centering holes on the lower part of the rack (number 1).	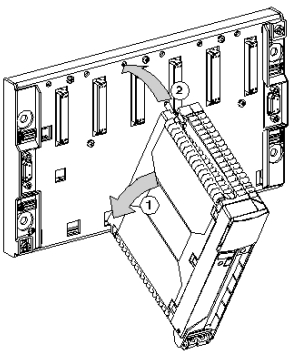
2	Swivel the module to bring it into contact with the rack (number 2).	
3	Fix the processor module to the rack by tightening the screw on the upper part of the module (number 3).	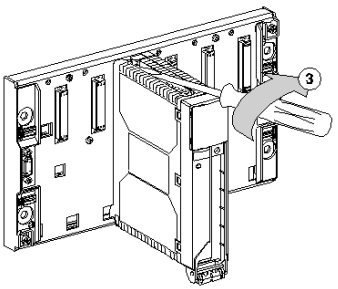

NOTE: the mounting of processor modules is identical to the mounting of other modules.

NOTE: Maximum tightening torque: 2.0. N.m.

NOTICE
POTENTIAL MODULE DAMAGE A processor module must always be mounted with the rack power supply switched off. **Failure to follow these instructions can result in equipment damage.**

Grounding modules

Processor modules are grounded using metal plates at the rear of the module. When the module is in place, these metal plates are in contact with the metal of the rack. This provides the ground connection.

Illustration

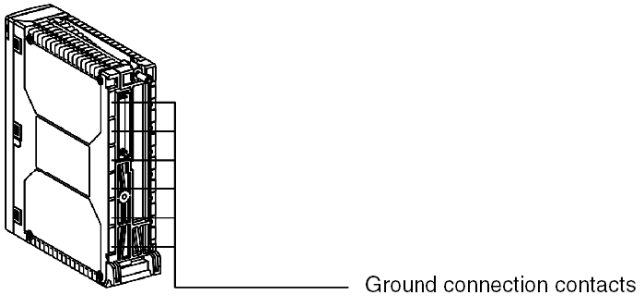

Installation of Modules next to TSX P57 0244/104/154 Processors

⚠ WARNING

MODULE OVERHEATING

For the TSX P57 0244/104/154 processors, the module next to the processor must not have a dissipated power greater than:

- 10W for an ambient operating temperature of 60°C,
- 16W for an ambient operating temperature of 25°C.

Otherwise, it will have to be installed in another slot in the rack.

Failure to follow these instructions can result in death, serious injury, or equipment damage.

For example, if the processor is in rack slot 1:

- a TSX CTY 2A module with a maximum dissipated power of 6W will be able to be placed next to the processor, i.e. in slot 2,
- a TSX CTY 4A module with a maximum dissipated power of 11.5W must be able to be placed in any slot other than in slot 2.

Standard Memory Cards for PLCs

Standard Memory Cards

There are 2 types of standard memory cards:

- Saved RAM memory extension cards.
- Flash Eprom memory extension cards.

Saved RAM memory extension cards:

Used particularly when generating and debugging an application program. They are used for all application transfer and modification services when online.

The memory is saved by a removable battery integrated in the memory card.

Flash Eprom memory extension cards:

Used when the application program debugging has finished. It allows only a global transfer of the application and avoids the problems associated with battery back-ups.

Note: To enable the creation of animation table in online mode using a Flash Eprom memory card, follow this procedure.

1 click **Tools → Project Settings ...**
2 in the *Build* tab, uncheck *Animation Table*

⚠ WARNING

UNEXPECTED APPLICATION BEHAVIOR - PCMCIA CARD PROTECTION

It is essential that any modification of the position of the PCMCIA card write protection switch be performed when the controller is powered down.

Failure to follow these instructions can result in death, serious injury, or equipment damage.

Product References of the RAM Memory Extension Cards

The following table shows the compatibility of the cards with the processors:

Product references	Type/Capacity		Maximum memory capacity generated by the processors					
	Application	File	TSX P57 0244	TSX P57 1•4	TSX P57 2•4 TSX PCI 57 204 TSX H57 24M	TSX P57 3•4	TSX P57 4•4 TSX PCI 57 354 TSX H57 44M	TSX P57 5•4 TSX P57 6•4
TSX MRP P 128K	RAM 128K8	0	Limited to 128K8	All	All	All	All	-
TSX MRP P 224K	RAM 224K8	0	Limited to 128K8	All	All	All	All	-
TSX MRP P 384K	RAM 384K8	0	Limited to 128K8	Limited to 224K8	All	All	All	-

Product References of the Flash Eprom Memory Extension Cards

The following table shows the compatibility of the cards with the processors:

Product references	Type/Capacity		Maximum memory capacity generated by the processors					
	Application	File	TSX P57 0244	TSX P57 1•4	TSX P57 2•4 TSX PCI 57 204 TSX H57 24M	TSX P57 3•4	TSX P57 4•4 TSX PCI 57 354 TSX H57 44M	TSX P57 5•4 TSX P57 6•4
TSX MFP P 128K	Flash Eprom 128K8	0	Limited to 128K8	All	All	All	All	-
TSX MFP P 224K	Flash Eprom 224K8	0	Limited to 128K8	All	All	All	All	-
TSX MFP P 384K	Flash Eprom 384K8	0	Limited to 128K8	Limited to 224K8	All	All	All	-
TSX MFP P 512K	Flash Eprom 512K8	0	Limited to 128K8	Limited to 224K8	All	All	All	All
TSX MFP P 001M	Flash Eprom 1024K8	0	Limited to 128K8	Limited to 224K8	Limited to 768K8	All	All	All

TSX MFP P 002M	Flash Eprom 2048K8	0		Limited to 224K8	Limited to 768K8	All	All	All
TSX MFP P 004M	Flash Eprom 4096K8	0		Limited to 224K8	Limited to 768K8	Limited to 1792K8	Limited to 2048K8	All

NOTE: Memory capacity: K8 = Kilobytes.
All the PCMCIA cards can be inserted in any processor with the exception of TSX P57 554/5634/6634 processors which do not accept low capacity TSX MRP P 128/224/384/K and TSX MFP P 128/224/384/K cards.
The usable application size is limited to the processor characteristics.

Application\File and File Storage Type Memory Cards

Application + Files Type Memory Extension Cards

In addition to the conventional application storage area (program + constants), these memory cards also have a file area for archiving/restoring the data by program.

Application examples:

- automatic storage of application data and remote consultation by modem link,
- storage of manufacturing formulas.

There are two types of memory card:

- **Saved RAM memory extension cards**: application + files. The memory is saved by a removable battery built into the memory card,
- **Flash Eprom memory extension card**: application + files. In this instance, the data storage area is in saved RAM which implies that this type of card must be equipped with a back-up battery.

⚠ WARNING

UNEXPECTED APPLICATION BEHAVIOR - PCMCIA CARD PROTECTION

It is essential that any modification of the position of the PCMCIA card write protection switch be performed when the controller is powered down.

Failure to follow these instructions can result in death, serious injury, or equipment damage.

Cards for Harsh Environments

Three cards have been developed especially for use in harsh environments. These are the TSX MRP C 001MC, TSX MRP C 003MC and TSX MRP C 007MC cards, whose characteristics are respectively identical to the TSX MRP C 001M, TSX MRP C 003M and TSX MRP C 003M cards.

Product Reference of the Cards

The following table gives you the application + files type memory extension card reference numbers and the compatibility of these cards with the processors:

Product references	Technology type	Capacity		Maximum memory capacity generated by the processors					
		Application area	File area (RAM type)	TSX P57 0244	TSX P57 1•4	TSX P57 2•4 TSX PCI 57 204 TSX H57 24M	TSX P57 3•4	TSX P57 4•4 TSX PCI 57 354 TSX H57 44M	TSX P57 5•4 TSX P57 6•4
TSX MRP C 448K (1)	RAM	448K8			Limited to 224/ 256K8	All	All	All	-
	Fault	192K8	256K8						
	Limits	96 to 448K8	0 to 352K8						
TSX MRP C 768K (1)	RAM	768K8			Limited to 224/ 256K8	All	All	All	All
	Fault	512K8	256K8						
	Limits	192 to 768K8	0 to 576K8						
TSX MRP C 001M (1)	RAM	1024K8			Limited to 224/ 256K8	Limited to 768/ 832K8	All	All	All
	Fault	768K8	256K8						
	Limits	192 to 1024K8	0 to 832K8						
TSX MRP C 001M7 (1)	RAM	1792K8			Limited to 224/ 256K8	Limited to 768/ 1600K8	All	All	All
	Fault	512K8	1280K8						
	Limits	192 to 1792K8	0 to 1600K8						
TSX MRP C 002M (1)	RAM	2048K8			Limited to 224/ 256K8	Limited to 768/ 1856K8	Limited to 1792/ 1856K8	All	All
	Fault	768K8	1280K8						
	Limits	192 to 2048K8	0 to 1856K8						
TSX MRP C 003M (1)	RAM	3072K16			Limited to 224/ 256K8	Limited to 768/ 2880K8	Limited to 1792/ 2880K8	Limited to 2048/ 2880K8	All
	Fault	1024K8	2048K8						
	Limits	192 to 3072K8	0 to 2880K8						
TSX MRP C 007M (1)	RAM	7168K8			Limited to 224/ 256K8	Limited to 768/ 6976K8	Limited to 1792/ 6976K8	Limited to 2048/ 6976K8	Limited to 4096/ 6976K8
	Fault	2048K8	5120K8						
	Limits	192 to 7168K8	0 to 6976K8						

Product references	Technology type	Capacity		Maximum memory capacity generated by the processors					
		Application area	File area (RAM type)	TSX P57 0244	TSX P57 1•4	TSX P57 2•4 TSX PCI 57 204 TSX H57 24M	TSX P57 3•4	TSX P57 4•4 TSX PCI 57 354 TSX H57 44M	TSX P57 5•4 TSX P57 6•4
TSX MCP C 224K	Flash Eprom	224K8	256K8	Limited to 128/ 256K8	All	All	All	All	-
TSX MCP C 512K	Flash Eprom	512K8	512K8	Limited to 128/ 256K8	Limited to 224/ 256K8	All	All	All	All
TSX MCP C 002M	Flash Eprom	2048K8	1024K8	Limited to 128/ 256K8	Limited to 224/ 256K8	Limited to 768/ 1024K8	Limited to 1792/ 1024K8	All	All

(1) PCMCIA having their application memory areas and floating capacity and unfrozen files.

NOTE: Memory capacity: K8 = Kilobytes
Notation of limits: the first number indicates the limit of the application zone, the second the limit of the file zone, for example: limited to 224K/256K signifies an application zone limited to 224K8 and a file zone limited to 256K8.
All the PCMCIA cards can be inserted in any processor with the exception of TSX P57 554/5634/6634 processors which do not accept low capacity TSX MCP C 224K and TSX MRP C 448K cards.
The usable application size is limited to the processor characteristics.

File Type Memory Extension Cards Without Application

These memory cards contain data. There is no application field (program + constants).

These memory extension file storage cards are of saved RAM type. The memory is saved by a removable battery built into the memory card.

Product References of the Cards

The following table gives you the reference number of the memory extension file storage cards without application and the compatibility of these cards with the processors:

Product references	Technology type	Capacity		Maximum memory capacity generated by the processors				
		Application area	File area (RAM type)	TSX P57 1•4	TSX P57 2•4 TSX PCI 57 204 TSX H57 24M	TSX P57 3•4	TSX P57 4•4 TSX PCI 57 454 TSX H57 44M	TSX P57 5•4 TSX P57 6•4
TSX MRP F 004M	RAM	4096K8		-	4096K8	4096K8	4096K8	4096K8
		0	4096K8					
TSX MRP F 008M	RAM	8192K8		-	8192K8	8192K8	8192K8	8192K8
		0	8192K8					

NOTE: Memory capacity: K8 = Kilobyte, M8 = Megabyte
All the PCMCIA cards may be inserted in any processor with the exception of the processors from the TSX P57 1•4 family.

Processing on insertion/extraction of a PCMCIA memory extension card on a Premium PLC

General points

⚠ CAUTION

MODULE DESTRUCTION

If there is no PCMCIA memory extension card inserted in the Premium PLC, do put in place the front panel protective cover.

Failure to follow these instructions can result in injury or equipment damage.

TSX P57 1•4 to 4•4 PLCs

Memory cards located in slot A (top)

The extraction (or absence) of the cover or memory card and clip causes the PLC to stop without saving the application context. Module outputs switch to fallback mode.

Inserting the cover or memory card with clip will cause the PLC to perform a cold start.

⚠ WARNING

UNEXPECTED BEHAVIOUR OF APPLICATION

Ensure that the right user application is contained in the memory card before inserting it into the PLC.

If the program contained in the PCMCIA memory card includes the RUN AUTO option, the processor will automatically restart in RUN after the card is inserted.

Failure to follow these instructions can result in death, serious injury, or equipment damage.

Memory cards located in slot B (bottom)

The Type 3 PCMCIA memory card should be inserted into slot B of the processor while the **PLC power is off**. Ignoring this warning could cause the processor to malfunction.

⚠ WARNING

UNEXPECTED APPLICATION BEHAVIOR - PCMCIA CARD PROTECTION

It is essential that any modification of the position of the PCMCIA card write protection switch be performed when the controller is powered down.

Failure to follow these instructions can result in death, serious injury, or equipment damage.

TSX P57 5•4/TSX P57 6•4/TSX H57 24M/TSX H57 44M PLCs

Memory cards located in slot A (top)

The extraction (or absence) of the cover or data or file-type memory card (*) and caddy has no effect on the operating modes of the PLC.

(*) in this case, the read/write functions of the memory card indicate an error if the application is in RUN.

The extraction of the memory card containing the application with its caddy causes the PLC to stop without saving the application context. Module outputs switch to fallback mode.

Inserting the memory card containing the application with its caddy will cause the PLC to perform a cold start.

⚠ WARNING

UNEXPECTED BEHAVIOUR OF APPLICATION

Ensure that the right user application is contained in the memory card before inserting it into the PLC.

If the program contained in the PCMCIA memory card includes the RUN AUTO option, the processor will automatically restart in RUN after the card is inserted.

Failure to follow these instructions can result in death, serious injury, or equipment damage.

Memory cards located in slot B (bottom)

The PCMCIA memory card with its caddy can be inserted into slot B of the processor while the **PLC power is on**.

Mounting/Removing PCMCIA Memory Extension Cards on a TSX P57/TSX H57 Processor

Introduction

The installation of the PCMCIA memory card on the TSX P57 processor module requires a clip or a caddy in the case of TSX P57 5•4/TSX H57•4 processors.

Position of the PCMCIA Cards in the Processors

The following table describes the possible slots for the different types of PCMCIA cards in the PLC processors:

PCMCIA card	Slot A (top)	Slot B (bottom)
Standard: TSX MRPP• and MFPP•	Yes	No
Application and Files: TSX MRPC• and MCPC•	Yes	No
Data or Files: TSX MRPF•	Yes	Yes

Mounting of the Card in the Clip

For TSX P57 1•4 to TSX P57 4•4 Premium PLCs, the memory cards (*) are mounted in the clip as follows:

Step	Action	Illustration
1	Place the end of the memory card (opposite end to the connector) between the arms of the clip. The markers (in the form of a triangle) on both the clip and the card label must be facing same way.	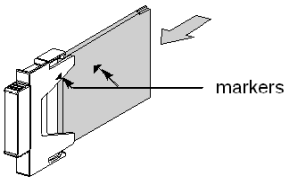
2	Slide the memory card into the clip until it stops. The card is now firmly attached to the clip.	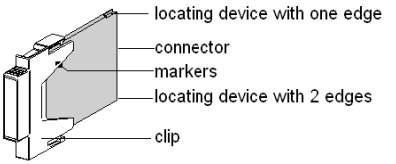

(*) Note: This mounting procedure is only for TSX MRPF• data or file-type cards. See mounting procedure below.

Mounting of the TSX MRP F• Card in the Extractor

For TSX P57 1•4 to TSX P57 4•4 Premium PLCs, the TSX MRP F• memory cards inserted in slot B (bottom) are mounted in the extractor as follows:

Step	Action	Illustration Card with a PV ≤ 03 (1)	Illustration Card with a PV > 03 (1)
1	Guide the memory card into the extractor from an oblique angle, placing the 2 pins on the card into the 2 grooves on the extractor.	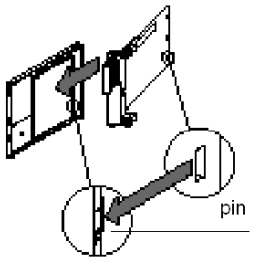	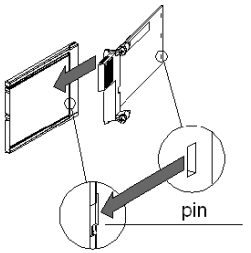
2	Swivel the extractor on the card until it is fully locked.	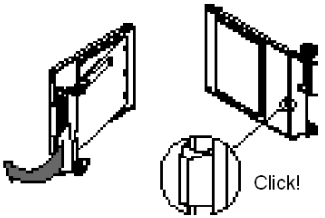	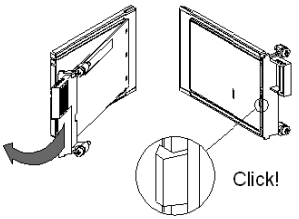
Legend			
(1): the **Product Version (PV)** is shown on the label affixed to the PCMCIA card.			

Mounting of the Card in the Caddy for TSX P 57 5•4/TSX H57•4

The following steps are to be performed regardless of the card type:

Step	Action	Illustration Card with a PV ≤ 03 (1)	Illustration Card with a PV > 03 (1)
1	Guide the memory card into the caddy from an oblique angle using the 2 locating devices.	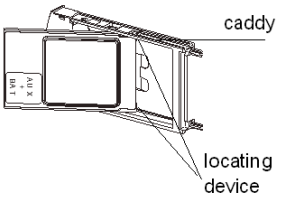	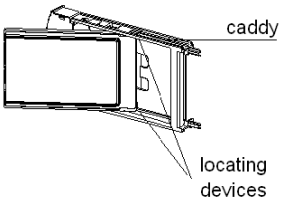
2	Slide the memory card into the caddy until it stops. The card is now firmly attached to the caddy.	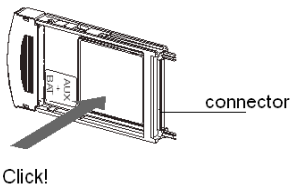	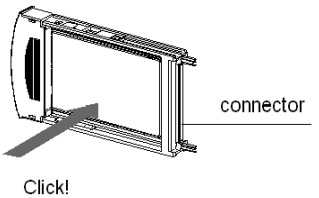
Legend			
(1): the **Product Version (PV)** is shown on the label affixed to the PCMCIA card.			

NOTE: For the upper caddy (slot A), the metallic contact has been removed.

Mounting of the Memory Card in the PLC

Carry out the following steps to install the memory card into the processor:

Step	Action
1	Remove the protective cover by unlocking it and then pulling it forwards out of the PLC.
2	Place the PCMCIA card fitted with its clip (or caddy) into the opened slot. Slide the card-clip assembly in until the card can go no further, then press the clip (or the caddy) to connect the card.

Example: position of the card in slot A for TSX 57 1•4 to 4•4.

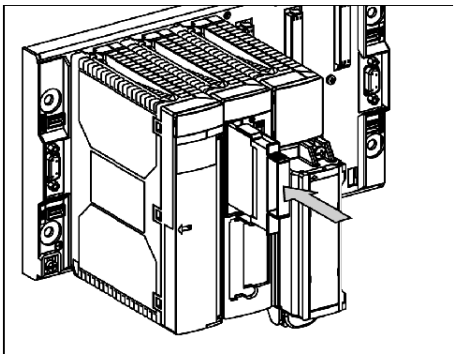

NOTE: For **TSX 57 1•4\2•4\3•4\4•4** processors, check that the mechanical locating devices are positioned correctly:

- 1 edge on top,
- 2 edges at the bottom.

For **TSX 57 5•4/TSX H57 •4M** processors, two guides ensure that the PCMCIA card is correctly positioned in its slot.

NOTE: If the program contained in the PCMCIA memory card contains the **RUN AUTO** option, the processor will automatically restart in **RUN** mode after the card has been inserted.

Chapter 8
TSX P57/TSX H57 processors: diagnostics

Aim of this Chapter

This Chapter deals with diagnostics for TSX P57/TSX H57 processors.

What Is in This Chapter?

This chapter contains the following topics:

Topic	Page
Display	116
Precautions to be taken when replacing a TSX P57/TSX H57 processor	118
Changing the TSX P57/TSX H57 RAM Memory Backup Battery	119
Changing the Batteries of a PCMCIA Memory Card	122
Battery Lifetimes for the PCMCIA Memory Card	126
What happens after you press the processor RESET button	135
Finding errors using processor state LEDs	136
Non blocking errors	137
Blocking errors	139
Processor or system errors	140

Display

At a Glance

Five LEDs on the front panel of the processor enable fast diagnostics of the status of the PLC.

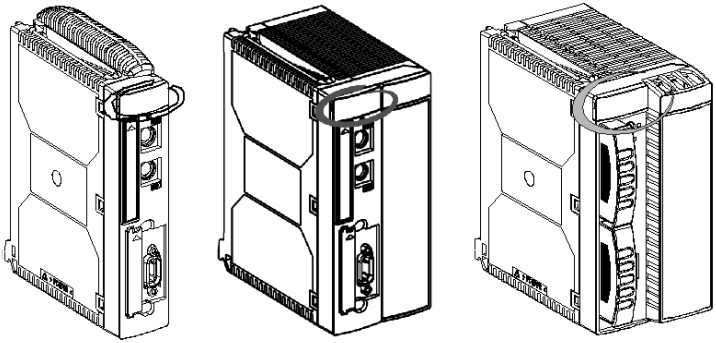

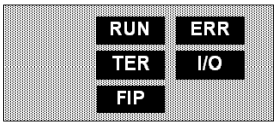

Description

The following table describes the role of each LED.

LEDs	On ●	Flashing ⊗	Off ○
RUN (green)	PLC running normally, program executing.	PLC in STOP mode or blocked by software error.	PLC not configured: application missing, invalid or incompatible.
RUN (TSX H57) (green)	PLC running in Primary mode, full program execution	● 2.5s ON, 500ms OFF: PLC running in Standby mode, only first section execution ● 500ms ON, 2.5s OFF: PLC running in Offline mode, no program execution ● 500ms ON, 500ms OFF: PLC in STOP mode or blocked by a software error	PLC not configured: application missing, invalid or incompatible
ERR (red)	Processor or system error.	● PLC not configured (application missing, invalid or incompatible), ● PLC blocked by a software error, ● memory card battery error, ● X-Bus error.	Normal state, no internal error.
I/O (red)	Input/Output errors coming from a module, a channel or a configuration error.	X-Bus error.	Normal state, no internal error.
TER (yellow)	-	Terminal port link active. The rate of flashing is relative to the amount of traffic.	Link not active.
FIP (yellow)	-	Fipio bus link active. The rate of flashing is relative to the amount of traffic.	Link not active.

NOTE:
- an X-Bus error is signaled by simultaneous flashing of the ERR and I/O LEDs,
- The FIP LED is only present on TSX P57 x54 and TSX P57 x84 processors.

Precautions to be taken when replacing a TSX P57/TSX H57 processor

Important

⚠ WARNING

UNEXPECTED EQUIPMENT OPERATION

If the TSX P57 processor is being replaced by another processor which is not blank (the processor has already been programmed and contains an application), the power for all the PLC station's control units must be switched off.

Before restoring power to the control units, check that the processor contains the required application.

Failure to follow these instructions can result in death, serious injury, or equipment damage.

Changing the TSX P57/TSX H57 RAM Memory Backup Battery

Introduction

This battery located on the TSX PSY... *(see page 258)* supply module ensures that the processor internal RAM memory and the real-time clock are saved in the event of a power outage. It is delivered in the same packaging as the power supply module and must be installed by the user.

Installing the Battery

Carry out the following steps:

Step	Action
1	Open the access flap on the front of the power supply module.
2	Place the battery in its slot, taking care to respect polarities as marked on the module.
3	Close the access flap.

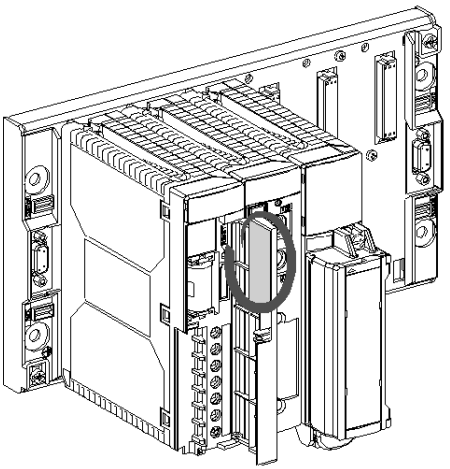

Changing the battery

The battery can be changed every year as a preventative measure or when the **BAT** LED is lit.

To do this, use the same procedure as for installation, and carry out the following steps:

Step	Action
1	Open the access flap for the battery.
2	Remove the defective battery from its slot.
3	Put the new battery into place.
4	Close and lock the access flap.

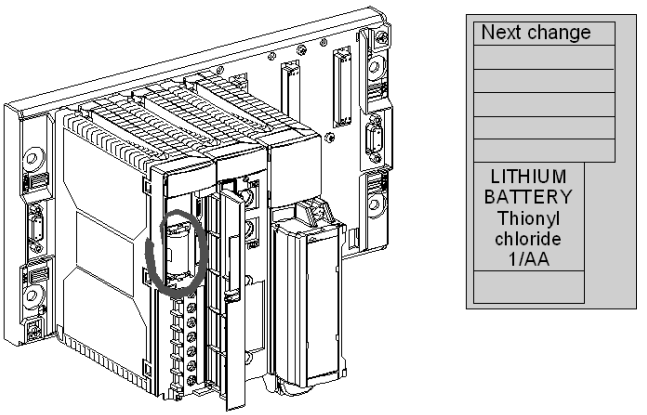

If there is a power outage while the battery is being changed, the processor ensures the RAM memory is saved, as it has its own offline independent save function.

NOTE: So as not to forget to change the battery, you are advised to note the date of the next change in the space provided on the inside of the flap.

How often must the battery be changed?

Period of battery backup

The length of time during which the battery can back up the processor's internal RAM memory and the real-time clock depends on two factors:

- The percentage of time for which the PLC is switched off and as a result the battery is being used,
- The ambient temperature when the PLC is switched off.

Summary table:

Ambient temperature when inoperative		≤ 30°C	40°C	50°C	60°C
Backup time	PLC off for 12 hours per day	5 years	3 years	2 years	1 year
	PLC off for 1 hour per day	5 years	5 years	4.5 years	4 years

Independent saving by the processor

The processors have their own offline independent save function to save the processor internal RAM memory and the real-time clock, which allows the removal of:

- The battery, the power supply or the TSX P57/TSX H57 processor.

The backup time depends on the ambient temperature.

Assuming that the processor was switched on previously, the guaranteed time varies in the following way:

Ambient temperature when switching off	20°C	30°C	40°C	50°C
Backup time	2h	45mn	20mn	8mn

Changing the Batteries of a PCMCIA Memory Card

General Points

Memory cards:
- TSX MRP P• standard RAM
- TSX MRP C• RAM for files and application and TSX MCP C• Flash EPROM
- TSX MRP F• data and file-type

have 2 backup batteries, TSX BAT M02 (main) and TSX BAT M03 (auxiliary), which need to be changed periodically.

Two methods are possible:
- one is preventive, based on a periodic change of batteries, without first checking their status,
- the other is predictive, based on the signal sent by a system bit, but is only possible for certain memory cards.

Preventive Method

This method is valid for all memory cards versions and for all the PLCs that use those cards (Premium, Quantum, Atrium). Change both batteries according to the PV of the PCMCIA card, the PLC use, and the lifetime of batteries *(see page 126)*. It does not matter which battery you change first: the application is preserved by the memory card. For the procedure for changing the batteries: see the service instructions provided with the memory cards.

NOTE:

- Batteries must not be removed from their positions simultaneously. One battery backs up the data and applications, while the other is being replaced,
- Install the batteries as shown in the following diagrams, noting the correct polarity (+ and -)
- The memory card must not remain 24 hours without its main battery in working order.
- To save the auxiliary batteries, you can replace them every 1.5 years only because that is their service life. In that case, for some memory cards you must remember to change the auxiliary battery once every three times,
- the service lives shown above were calculated for the most unfavorable case: ambient temperature around the PLC at 60°C, and the PLC switched on for 21% of the time in the year (which corresponds to an 8 hour rotation per day with 30 maintenance stoppage days per year).

Predictive Method

This is maintenance based on using bits %S67 and %S75 and using the ERR diode on the Premium interface. This method assumes that the auxiliary battery is changed preventively every 1.5 years. It is only possible:

- with Unity Pro ≥ 2.02,
  Unity Pro is the former name of Control Expert for version 13.1 or earlier.
- if the memory card is installed in the top PCMCIA slot on all Premium and Quantum processors,
- if the memory card is installed in the lower PCMCIA slot on all Premium TSX P57 4••, TSX P57 5•• and TSX P57 6•• and Quantum processors.

When system bit %S67 (card in the top slot) or %S75 (card in the bottom slot) changes to 1 or the ERR diode on the processor front panel flashes, it means that the main battery is weak. You have 8 days to replace the battery, as indicated in the service instructions delivered with memory cards.

NOTE: If the PLC must be left off or if the memory card must be outside the PLC for more than 8 days, and you have exceeded the service life of the main battery, then back up the application in Control Expert.

Changing the Batteries

Carry out the following steps:

Step	Action
1	Take the card out of its slot *(see page 110)*.
2	Separate the PCMCIA card *(see page 110)* from its clip (or caddy).
3	Hold the PCMCIA card so you can access the battery slot. This is at the end of the card without the connector.
4	Replacement of the TSX BAT M02 battery: see table 1. Replacement of the TSX BAT M03 battery: see table 2.
5	Attach the PCMCIA card *(see page 110)* to its clip (or caddy).
6	Place the card back in the PLC. *(see page 110)*

Procedure for the TSX BAT M02 Battery

The following table shows the procedure for changing the main battery:

Step	Action	Illustration
1	Toggle the changeover lever toward the **TSX BAT M02** (MAIN) battery in order to remove drawer from the main battery.	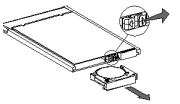
2	Remove the used battery from its holder:	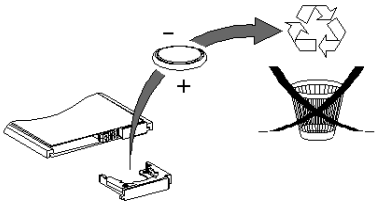
3	Place the new battery in the holder, taking care to respect the polarity.	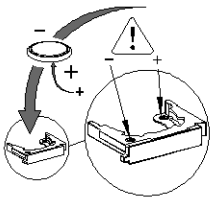
4	Insert the holder containing the battery in the card.	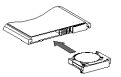

Procedure for the TSX BAT M03 Battery:

The following table shows the procedure for changing the auxiliary battery:

Step	Action	Illustration
1	Toggle the changeover lever toward the **TSX BAT M03** (AUX) battery in order to remove drawer from the battery.	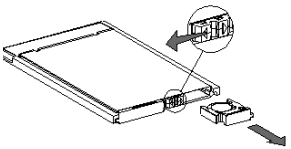
2	Remove the used battery from its holder:	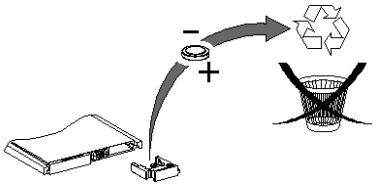
3	Place the new battery in the holder, taking care to respect the polarity.	
4	Insert the holder containing the battery in the card.	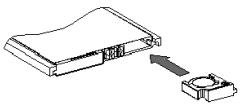

Battery Lifetimes for the PCMCIA Memory Card

Purpose

The purpose of this document is to give detailed information about the lifetime of batteries inside PCMCIA memory cards. The estimation of these lifetimes are based on data from component manufacturers.

Scope

The lifetime information is estimated for:

- RAM PCMCIA memory cards,
- The three different cases of Product Version (PV): PV1/2/3, PV4/5 and PV6,
- Four ambient temperatures for the PLC location: 25°C / 40°C / 50°C / 60°C,
- Four different usage cases of the PCMCIAs: 100%, 92%, 66% and 33% of PLC power-up time. These values are for the following customer configurations:
  - 100%: PLC powered up all year long or during 51 weeks,
  - 92%: PLC powered up all year long except during one month of maintenance,
  - 66%: PLC powered up all year long except during all weekends plus one month of maintenance,
  - 33%: PLC powered up all year long 12 hours a day, except during all weekends plus one month of maintenance.
- A Min (minimum) and a Typical lifetime value:
  - The Min value comes from the most unfavorable characteristics given by the component manufacturers. The actual observed lifetime will be greater than this value.
  - The typical value comes from the typical characteristics of the component.

Main Battery Lifetime of PV1/2/3 PCMCIA (in Years)

The table below presents the lifetime of main battery TSX BAT M01(PV1/2/3) for PCMCIA memory cards:

PV1/2/3	For a 25°C PLC ambient temperature							
	100% powered up		92% PU (30d maint.		66% PU (WE. 30d maint.		33% PU (12h.WE. 30d maint.	
	Typical	Min	Typical	Min	Typical	Min	Typical	Min
TSX MCP C 224K	7.10	7.10	6.71	5.58	5.77	3.36	4.82	2.20
TSX MCP C 512K	7.10	7.10	6.71	5.65	5.77	3.46	4.82	2.28
TSX MCP C 002M	7.10	7.10	6.29	3.82	4.66	1.57	3.45	0.88
TSX MRP P128K	7.10	7.10	6.71	5.58	5.77	3.36	4.82	2.20
TSX MRP P224K	7.10	7.10	6.71	5.65	5.77	3.46	4.82	2.28
TSX MRP P384K	7.10	7.10	6.71	4.99	5.77	2.60	4.82	1.59
TSX MRP C448K	7.10	7.10	6.29	4.65	4.66	2.24	3.45	1.33

PV1/2/3	For a 25°C PLC ambient temperature							
	100% powered up		92% PU (30d maint.		66% PU (WE. 30d maint.		33% PU (12h.WE. 30d maint.	
	Typical	Min	Typical	Min	Typical	Min	Typical	Min
TSX MRP C768K	7.10	7.10	6.29	4.65	4.66	2.24	3.45	1.33
TSX MRP C001M	7.10	7.10	5.91	3.95	3.91	1.66	2.68	0.94
TSX MRP C01M7	7.10	7.10	5.58	3.43	3.36	1.32	2.20	0.72
TSX MRP C002M	7.10	7.10	5.91	3.34	3.91	1.26	2.68	0.69
TSX MRP C003M	7.10	7.10	5.58	2.60	3.36	0.87	2.20	0.47
TSX MRP C007M	7.10	7.10	4.56	1.59	2.16	0.46	1.27	0.24
TSX MRP F004M	7.10	7.10	5.58	2.60	3.36	0.87	2.20	0.47
TSX MRP F008M	7.10	7.10	4.56	1.59	2.16	0.46	1.27	0.24

PV1/2/3	For a 40°C PLC ambient temperature							
	100% powered up		92% PU (30d maint.		66% PU (WE. 30d maint.		33% PU (12h.WE. 30d maint.	
	Typical	Min	Typical	Min	Typical	Min	Typical	Min
TSX MCP C 224K	3.55	3.55	3.54	3.20	3.54	2.46	3.48	1.87
TSX MCP C 512K	3.55	3.55	3.54	3.22	3.54	2.51	3.48	1.93
TSX MCP C 002M	3.55	3.55	3.42	2.53	3.08	1.34	2.71	0.82
TSX MRP P128K	3.55	3.55	3.54	3.20	3.54	2.46	3.48	1.87
TSX MRP P224K	3.55	3.55	3.54	3.22	3.54	2.51	3.48	1.93
TSX MRP P384K	3.55	3.55	3.54	3.00	3.54	2.02	3.48	1.41
TSX MRP C448K	3.55	3.55	3.42	2.87	3.08	1.80	2.71	1.20
TSX MRP C768K	3.55	3.55	3.42	2.87	3.08	1.80	2.71	1.20
TSX MRP C001M	3.55	3.55	3.30	2.59	2.74	1.40	2.21	0.87
TSX MRP C01M7	3.55	3.55	3.20	2.35	2.46	1.15	1.87	0.69
TSX MRP C002M	3.55	3.55	3.30	2.31	2.74	1.11	2.21	0.65
TSX MRP C003M	3.55	3.55	3.20	1.93	2.46	0.80	1.87	0.45
TSX MRP C007M	3.55	3.55	2.84	1.31	1.75	0.44	1.16	0.24
TSX MRP F004M	3.55	3.55	3.20	1.93	2.46	0.80	1.87	0.45
TSX MRP F008M	3.55	3.55	2.84	1.31	1.75	0.44	1.16	0.24

PV1/2/3	For a 50°C PLC ambient temperature							
	100% powered up		92% PU (30d maint.		66% PU (WE. 30d maint.		33% PU (12h.WE. 30d maint.	
	Typical	Min	Typical	Min	Typical	Min	Typical	Min
TSX MCP C 224K	2.35	2.35	2.42	2.25	2.69	2.02	3.10	1.75
TSX MCP C 512K	2.35	2.35	2.42	2.26	2.69	2.05	3.10	1.81
TSX MCP C 002M	2.35	2.35	2.36	1.90	2.42	1.20	2.47	0.80
TSX MRP P128K	2.35	2.35	2.42	2.25	2.69	2.02	3.10	1.75
TSX MRP P224K	2.35	2.35	2.42	2.26	2.69	2.05	3.10	1.81
TSX MRP P384K	2.35	2.35	2.42	2.15	2.69	1.71	3.10	1.34
TSX MRP C448K	2.35	2.35	2.36	2.09	2.42	1.55	2.47	1.15
TSX MRP C768K	2.35	2.35	2.36	2.09	2.42	1.55	2.47	1.15
TSX MRP C001M	2.35	2.35	2.31	1.93	2.20	1.25	2.05	0.85
TSX MRP C01M7	2.35	2.35	2.25	1.80	2.02	1.04	1.75	0.67
TSX MRP C002M	2.35	2.35	2.31	1.77	2.20	1.01	2.05	0.64
TSX MRP C003M	2.35	2.35	2.25	1.54	2.02	0.75	1.75	0.44
TSX MRP C007M	2.35	2.35	2.07	1.12	1.51	0.42	1.11	0.23
TSX MRP F004M	2.35	2.35	2.25	1.54	2.02	0.75	1.75	0.44
TSX MRP F008M	2.35	2.35	2.07	1.12	1.51	0.42	1.11	0.23

PV1/2/3	For a 60°C PLC ambient temperature							
	100% powered up		92% PU (30d maint.		66% PU (WE. 30d maint.		33% PU (12h.WE. 30d maint.	
	Typical	Min	Typical	Min	Typical	Min	Typical	Min
TSX MCP C 224K	1.57	1.57	1.63	1.56	1.91	1.54	2.40	1.50
TSX MCP C 512K	1.57	1.57	1.63	1.56	1.91	1.56	2.40	1.54
TSX MCP C 002M	1.57	1.57	1.61	1.38	1.77	1.01	2.00	0.74
TSX MRP P128K	1.57	1.57	1.63	1.56	1.91	1.54	2.40	1.50
TSX MRP P224K	1.57	1.57	1.63	1.56	1.91	1.56	2.40	1.54
TSX MRP P384K	1.57	1.57	1.63	1.51	1.91	1.36	2.40	1.19
TSX MRP C448K	1.57	1.57	1.61	1.47	1.77	1.25	2.00	1.04
TSX MRP C768K	1.57	1.57	1.61	1.47	1.77	1.25	2.00	1.04
TSX MRP C001M	1.57	1.57	1.58	1.40	1.65	1.05	1.72	0.78
TSX MRP C01M7	1.57	1.57	1.56	1.33	1.54	0.90	1.50	0.63
TSX MRP C002M	1.57	1.57	1.58	1.31	1.65	0.87	1.72	0.60

PV1/2/3	For a 60°C PLC ambient temperature							
	100% powered up		92% PU (30d maint.		66% PU (WE. 30d maint.		33% PU (12h.WE. 30d maint.	
	Typical	Min	Typical	Min	Typical	Min	Typical	Min
TSX MRP C003M	1.57	1.57	1.56	1.18	1.54	0.67	1.50	0.42
TSX MRP C007M	1.57	1.57	1.47	0.92	1.23	0.40	1.00	0.23
TSX MRP F004M	1.57	1.57	1.56	1.18	1.54	0.67	1.50	0.42
TSX MRP F008M	1.57	1.57	1.47	0.92	1.23	0.40	1.00	0.23

Main Battery Lifetime of PV4/5 PCMCIA (in Years)

The table below presents the lifetime of main battery TSX BAT M02 (PV4/5) for PCMCIA memory cards:

PV4/5	For a 25°C PLC ambient temperature							
	100% powered up		92% PU (30d maint.		66% PU (WE. 30d maint.		33% PU (12h.WE. 30d maint.	
	Typical	Min	Typical	Min	Typical	Min	Typical	Min
TSX MCP C 224K	7.22	7.22	7.15	6.27	7.02	4.48	6.76	3.23
TSX MCP C 512K	7.22	7.22	7.15	6.33	7.02	4.59	6.76	3.35
TSX MCP C 002M	7.22	7.22	6.83	4.69	5.90	2.25	4.96	1.33
TSX MRP P128K	7.22	7.22	7.15	6.27	7.02	4.48	6.76	3.23
TSX MRP P224K	7.22	7.22	7.15	6.33	7.02	4.59	6.76	3.35
TSX MRP P384K	7.22	7.22	7.15	5.77	7.02	3.57	6.76	2.36
TSX MRP C448K	7.22	7.22	6.83	5.47	5.90	3.12	4.96	1.99
TSX MRP C768K	7.22	7.22	6.83	5.47	5.90	3.12	4.96	1.99
TSX MRP C001M	7.22	7.22	6.54	4.82	5.09	2.37	3.91	1.41
TSX MRP C01M7	7.22	7.22	6.27	4.30	4.48	1.91	3.23	1.10
TSX MRP C002M	7.22	7.22	6.54	4.20	5.09	1.83	3.91	1.04
TSX MRP C003M	7.22	7.22	6.27	3.41	4.48	1.29	3.23	0.71
TSX MRP C007M	7.22	7.22	5.39	2.21	3.02	0.70	1.91	0.37
TSX MRP F004M	7.22	7.22	6.27	3.41	4.48	1.29	3.23	0.71
TSX MRP F008M	7.22	7.22	5.39	2.21	3.02	0.70	1.91	0.37

PV4/5	For a 40°C PLC ambient temperature							
	100% powered up		92% PU (30d maint.		66% PU (WE. 30d maint.		33% PU (12h.WE. 30d maint.	
	Typical	Min	Typical	Min	Typical	Min	Typical	Min
TSX MCP C 224K	4.63	4.63	4.72	4.32	5.09	3.61	5.59	2.94
TSX MCP C 512K	4.63	4.63	4.72	4.35	5.09	3.68	5.59	3.04
TSX MCP C 002M	4.63	4.63	4.58	3.51	4.48	2.00	4.30	1.28
TSX MRP P128K	4.63	4.63	4.72	4.32	5.09	3.61	5.59	2.94
TSX MRP P224K	4.63	4.63	4.72	4.35	5.09	3.68	5.59	3.04
TSX MRP P384K	4.63	4.63	4.72	4.08	5.09	2.99	5.59	2.20
TSX MRP C448K	4.63	4.63	4.58	3.93	4.48	2.68	4.30	1.87
TSX MRP C768K	4.63	4.63	4.58	3.93	4.48	2.68	4.30	1.87
TSX MRP C001M	4.63	4.63	4.45	3.58	4.00	2.10	3.49	1.35
TSX MRP C01M7	4.63	4.63	4.32	3.29	3.61	1.73	2.94	1.06
TSX MRP C002M	4.63	4.63	4.45	3.23	4.00	1.66	3.49	1.01
TSX MRP C003M	4.63	4.63	4.32	2.74	3.61	1.21	2.94	0.69
TSX MRP C007M	4.63	4.63	3.89	1.91	2.60	0.67	1.80	0.36
TSX MRP F004M	4.63	4.63	4.32	2.74	3.61	1.21	2.94	0.69
TSX MRP F008M	4.63	4.63	3.89	1.91	2.60	0.67	1.80	0.36

PV4/5	For a 50°C PLC ambient temperature							
	100% powered up		92% PU (30d maint.		66% PU (WE. 30d maint.		33% PU (12h.WE. 30d maint.	
	Typical	Min	Typical	Min	Typical	Min	Typical	Min
TSX MCP C 224K	2.58	2.58	2.69	2.56	3.12	2.50	3.89	2.39
TSX MCP C 512K	2.58	2.58	2.69	2.56	3.12	2.53	3.89	2.45
TSX MCP C 002M	2.58	2.58	2.64	2.25	2.88	1.61	3.22	1.16
TSX MRP P128K	2.58	2.58	2.69	2.56	3.12	2.50	3.89	2.39
TSX MRP P224K	2.58	2.58	2.69	2.56	3.12	2.53	3.89	2.45
TSX MRP P384K	2.58	2.58	2.69	2.47	3.12	2.18	3.89	1.88
TSX MRP C448K	2.58	2.58	2.64	2.41	2.88	2.01	3.22	1.63
TSX MRP C768K	2.58	2.58	2.64	2.41	2.88	2.01	3.22	1.63
TSX MRP C001M	2.58	2.58	2.60	2.28	2.68	1.67	2.74	1.23
TSX MRP C01M7	2.58	2.58	2.56	2.15	2.50	1.42	2.39	0.98
TSX MRP C002M	2.58	2.58	2.60	2.13	2.68	1.38	2.74	0.94

PV4/5	For a 50°C PLC ambient temperature							
	100% powered up		92% PU (30d maint.		66% PU (WE. 30d maint.		33% PU (12h.WE. 30d maint.	
	Typical	Min	Typical	Min	Typical	Min	Typical	Min
TSX MRP C003M	2.58	2.58	2.56	1.90	2.50	1.05	2.39	0.66
TSX MRP C007M	2.58	2.58	2.40	1.46	1.97	0.62	1.58	0.35
TSX MRP F004M	2.58	2.58	2.56	1.90	2.50	1.05	2.39	0.66
TSX MRP F008M	2.58	2.58	2.40	1.46	1.97	0.62	1.58	0.35

PV4/5	For a 60°C PLC ambient temperature							
	100% powered up		92% PU (30d maint.		66% PU (WE. 30d maint.		33% PU (12h.WE. 30d maint.	
	Typical	Min	Typical	Min	Typical	Min	Typical	Min
TSX MCP C 224K	1.75	1.75	1.84	1.78	2.21	1.88	2.95	2.00
TSX MCP C 512K	1.75	1.75	1.84	1.78	2.21	1.90	2.95	2.04
TSX MCP C 002M	1.75	1.75	1.82	1.62	2.09	1.33	2.55	1.06
TSX MRP P128K	1.75	1.75	1.84	1.78	2.21	1.88	2.95	2.00
TSX MRP P224K	1.75	1.75	1.84	1.78	2.21	1.90	2.95	2.04
TSX MRP P384K	1.75	1.75	1.84	1.73	2.21	1.70	2.95	1.63
TSX MRP C448K	1.75	1.75	1.82	1.71	2.09	1.59	2.55	1.44
TSX MRP C768K	1.75	1.75	1.82	1.71	2.09	1.59	2.55	1.44
TSX MRP C001M	1.75	1.75	1.80	1.64	1.98	1.37	2.24	1.11
TSX MRP C01M7	1.75	1.75	1.78	1.57	1.88	1.20	2.00	0.91
TSX MRP C002M	1.75	1.75	1.80	1.56	1.98	1.17	2.24	0.87
TSX MRP C003M	1.75	1.75	1.78	1.44	1.88	0.92	2.00	0.62
TSX MRP C007M	1.75	1.75	1.70	1.17	1.56	0.57	1.40	0.34
TSX MRP F004M	1.75	1.75	1.78	1.44	1.88	0.92	2.00	0.62
TSX MRP F008M	1.75	1.75	1.70	1.17	1.56	0.57	1.40	0.34

Main Battery Lifetime of PV6 PCMCIA (in Years)

The table below presents the lifetime of main battery TSX BAT M02 (PV6) for PCMCIA memory cards:

PV6	For a 25°C PLC ambient temperature							
	100% powered up		92% PU (30d maint.		66% PU (WE. 30d maint.		33% PU (12h.WE. 30d maint.	
	Typical	Min	Typical	Min	Typical	Min	Typical	Min
TSX MCP C 224K	7.2	7.2	7.2	6.3	7.0	4.5	6.8	3.2
TSX MCP C 512K	7.2	7.2	7.2	6.5	7.0	5.1	6.8	3.9
TSX MCP C 002M	7.2	7.2	6.8	5.8	5.9	3.6	5.0	2.4
TSX MRP P128K	7.2	7.2	7.2	6.3	7.0	4.5	6.8	3.2
TSX MRP P224K	7.2	7.2	7.2	6.5	7.0	5.1	6.8	3.9
TSX MRP P384K	7.2	7.2	7.2	6.5	7.0	5.1	6.8	3.9
TSX MRP C448K	7.2	7.2	6.8	5.8	5.9	3.6	5.0	2.4
TSX MRP C768K	7.2	7.2	6.8	5.8	5.9	3.6	5.0	2.4
TSX MRP C001M	7.2	7.2	6.5	5.2	5.1	2.8	3.9	1.7
TSX MRP C01M7	7.2	7.2	6.3	4.7	4.5	2.3	3.2	1.4
TSX MRP C002M	7.2	7.2	6.5	5.2	5.1	2.8	3.9	1.7
TSX MRP C003M	7.2	7.2	6.3	4.7	4.5	2.3	3.2	1.4
TSX MRP C007M	7.2	7.2	5.4	3.5	3.0	1.3	1.9	0.7
TSX MRP F004M	7.2	7.2	6.3	4.7	4.5	2.3	3.2	1.4
TSX MRP F008M	7.2	7.2	5.4	3.5	3.0	1.3	1.9	0.7

PV6	For a 40°C PLC ambient temperature							
	100% powered up		92% PU (30d maint.		66% PU (WE. 30d maint.		33% PU (12h.WE. 30d maint.	
	Typical	Min	Typical	Min	Typical	Min	Typical	Min
TSX MCP C 224K	4.6	4.6	4.7	4.3	5.1	3.6	5.6	2.9
TSX MCP C 512K	4.6	4.6	4.7	4.4	5.1	4.0	5.6	3.5
TSX MCP C 002M	4.6	4.6	4.6	4.1	4.5	3.0	4.3	2.2
TSX MRP P128K	4.6	4.6	4.7	4.3	5.1	3.6	5.6	2.9
TSX MRP P224K	4.6	4.6	4.7	4.4	5.1	4.0	5.6	3.5
TSX MRP P384K	4.6	4.6	4.7	4.4	5.1	4.0	5.6	3.5
TSX MRP C448K	4.6	4.6	4.6	4.1	4.5	3.0	4.3	2.2
TSX MRP C768K	4.6	4.6	4.6	4.1	4.5	3.0	4.3	2.2

PV6	For a 40°C PLC ambient temperature							
	100% powered up		92% PU (30d maint.		66% PU (WE. 30d maint.		33% PU (12h.WE. 30d maint.	
	Typical	Min	Typical	Min	Typical	Min	Typical	Min
TSX MRP C001M	4.6	4.6	4.4	3.8	4.0	2.4	3.5	1.6
TSX MRP C01M7	4.6	4.6	4.3	3.5	3.6	2.0	2.9	1.3
TSX MRP C002M	4.6	4.6	4.4	3.8	4.0	2.4	3.5	1.6
TSX MRP C003M	4.6	4.6	4.3	3.5	3.6	2.0	2.9	1.3
TSX MRP C007M	4.6	4.6	3.9	2.8	2.6	1.2	1.8	0.7
TSX MRP F004M	4.6	4.6	4.3	3.5	3.6	2.0	2.9	1.3
TSX MRP F008M	4.6	4.6	3.9	2.8	2.6	1.2	1.8	0.7

PV6	For a 50°C PLC ambient temperature							
	100% powered up		92% PU (30d maint.		66% PU (WE. 30d maint.		33% PU (12h.WE. 30d maint.	
	Typical	Min	Typical	Min	Typical	Min	Typical	Min
TSX MCP C 224K	2.6	2.6	2.7	2.6	3.1	2.5	3.9	2.4
TSX MCP C 512K	2.6	2.6	2.7	2.6	3.1	2.7	3.9	2.7
TSX MCP C 002M	2.6	2.6	2.6	2.5	2.9	2.2	3.2	1.9
TSX MRP P128K	2.6	2.6	2.7	2.6	3.1	2.5	3.9	2.4
TSX MRP P224K	2.6	2.6	2.7	2.6	3.1	2.7	3.9	2.7
TSX MRP P384K	2.6	2.6	2.7	2.6	3.1	2.7	3.9	2.7
TSX MRP C448K	2.6	2.6	2.6	2.5	2.9	2.2	3.2	1.9
TSX MRP C768K	2.6	2.6	2.6	2.5	2.9	2.2	3.2	1.9
TSX MRP C001M	2.6	2.6	2.6	2.4	2.7	1.9	2.7	1.5
TSX MRP C01M7	2.6	2.6	2.6	2.3	2.5	1.6	2.4	1.2
TSX MRP C002M	2.6	2.6	2.6	2.4	2.7	1.9	2.7	1.5
TSX MRP C003M	2.6	2.6	2.6	2.3	2.5	1.6	2.4	1.2
TSX MRP C007M	2.6	2.6	2.4	1.9	2.0	1.1	1.6	0.7
TSX MRP F004M	2.6	2.6	2.6	2.3	2.5	1.6	2.4	1.2
TSX MRP F008M	2.6	2.6	2.4	1.9	2.0	1.1	1.6	0.7

PV6	For a 60°C PLC ambient temperature							
	100% powered up		92% PU (30d maint.		66% PU (WE. 30d maint.		33% PU (12h.WE. 30d maint.	
	Typical	Min	Typical	Min	Typical	Min	Typical	Min
TSX MCP C 224K	1.8	1.8	1.8	1.8	2.2	1.9	3.0	2.0
TSX MCP C 512K	1.8	1.8	1.8	1.8	2.2	2.0	3.0	2.2
TSX MCP C 002M	1.8	1.8	1.8	1.7	2.1	1.7	2.5	1.6
TSX MRP P128K	1.8	1.8	1.8	1.8	2.2	1.9	3.0	2.0
TSX MRP P224K	1.8	1.8	1.8	1.8	2.2	2.0	3.0	2.2
TSX MRP P384K	1.8	1.8	1.8	1.8	2.2	2.0	3.0	2.2
TSX MRP C448K	1.8	1.8	1.8	1.7	2.1	1.7	2.5	1.6
TSX MRP C768K	1.8	1.8	1.8	1.7	2.1	1.7	2.5	1.6
TSX MRP C001M	1.8	1.8	1.8	1.7	2.0	1.5	2.2	1.3
TSX MRP C01M7	1.8	1.8	1.8	1.6	1.9	1.3	2.0	1.1
TSX MRP C002M	1.8	1.8	1.8	1.7	2.0	1.5	2.2	1.3
TSX MRP C003M	1.8	1.8	1.8	1.6	1.9	1.3	2.0	1.1
TSX MRP C007M	1.8	1.8	1.7	1.4	1.6	0.9	1.4	0.6
TSX MRP F004M	1.8	1.8	1.8	1.6	1.9	1.3	2.0	1.1
TSX MRP F008M	1.8	1.8	1.7	1.4	1.6	0.9	1.4	0.6

Minimum Lifetime of the Main Battery, in a Powered Down PLC

In a powered down PLC, the minimum lifetime of the main battery is 6 months in PV6 PCMCIAs.

Auxiliary Battery Lifetime

The auxiliary battery TSX BATM 03 is included in the PCMCIA product. Whatever the usage cases and ambient temperature, the lifetime of the auxiliary battery is:

- 5 years in PV1/2/3
- 1.7 years in PV4/5
- 5 years in PV6

What happens after you press the processor RESET button

General

All processors have a RESET button on their front panel, which when pressed, causes a cold start of the PLC, in RUN or in STOP mode (starting in RUN or in STOP mode is defined at configuration), on the application contained in the memory card (or in the internal RAM)…

RESET following a fault detected by the processor

As soon as a processor detects a fault, the alarm relay on rack 0 (with TSX 57 processor) is deactivated (open contact) and the module outputs switch to fallback position or are maintained in the current state depending on the selection made in configuration. Pressing the RESET button causes the PLC, forced into STOP, to cold start.

NOTE: When the RESET button is pressed, and during the PLC cold start, the terminal link is deactivated.

Finding errors using processor state LEDs

General

The state LEDs situated on the processor enable the user to obtain information on operating mode of the PLC and on possible errors.

Errors detected by the PLC concern:

- circuits constituting the PLC and/or its modules: internal errors,
- the process controlled by the PLC or the cabling of the process: external errors,
- operation of the application executed by the PLC: internal or external errors.

Error detection

Detecting errors is carried out during start-up (self-test) or during operation (this is the case for most hardware errors), during exchanges with modules or during the execution of a program instruction.

Certain "serious" errors require the PLC to be restarted, others are controlled by the user who decides on the behavior to adopt according to the desired level of application function.

There are three types of error:

- non blocking,
- blocking,
- processor or system error.

Non blocking errors

General

This concerns an anomaly, provoked by an Input/Output error on the X-Bus, on the Fipio bus or by the execution of an instruction. It can be processed by the user program and does not change the PLC state.

Non blocking errors linked to Inputs/Outputs

The identification of a non blocking error linked to the Inputs/Outputs is signaled by:

- **the I/O state LED** of the processor is lit,
- **the I/O state LEDs** of the faulty modules are lit, (on X-Bus and Fipio bus),
- **the bits and error words associated with the channel:**
  - Inputs/Outputs on X-Bus:
    bit %I<r>.<m>.<c>.ERR = 1 indicates a faulty channel (implicit exchanges),
    words %MW<r>.<m>.<c>.2 indicates the channel fault type (explicit exchanges),
  - Inputs/Outputs on Fipio bus:
    bit % I\2.<e>\0.<m>.<c>.ERR = 1 indicates a faulty channel (implicit exchanges),
    words %MW\2.<e>\0.<m>.<c>.2 indicates the channel fault type (explicit exchanges),
- **bits and error words associated with the module:**
  - Module on X-Bus:
    bit %I<r>.<m>.MOD.ERR = 1 indicates a faulty channel (implicit exchanges),
    words %MW<r>.<m>.MOD.2 indicates the channel fault type (explicit exchanges),
  - Module on Fipio bus:
    bit %I\2.< e>\0.0.MOD.ERR = 1 indicates a faulty module (implicit exchanges),
    words %MW\2.<e>\0.0.MOD.2 indicates the module fault type (explicit exchanges),

- **system bits:**
  %S10: I/O error (on X-Bus or Fipio bus),
  %S16: I/O error (on X-Bus and Fipio bus) in the task in progress,
  %S40 to %S47: I/O error in racks at addresses 0 to 7 on the X-Bus.

Diagnostics table:

Status LED			System bits	Errors
RUN	ERR	I/O		
i	i	On	%S10	Input/Output error: channel supply fault, channel disjointed, module not conforming to configuration, out of service, module supply fault.
i	i	On	%S16	Error on Input/Output in a task.
i	i	On	%S40 to %S47	Error on Inputs/Outputs at rack level (%S40: rack 0, %S47: rack 7)

Legend:

A: Lit LED,

i: State not determined.

Non blocking errors linked to program execution

The indication of a non blocking error linked to program execution is signaled by setting to state 1 of one or several system bits %S15, %S18, %S20.

The test and setting to state 0 of the system bits are controlled by the user.

Diagnostics table:

Status LED			System bits	Errors
RUN	ERR	I/O		
On	i	i	%S15=1	Character string manipulation error.
On	i	i	%S18=1	Capacity overrun, error on floating point or division by 0.
On	i	i	%S20=1	Index overflow.

Legend:

A: Lit LED,

i: State not determined.

NOTE: The program diagnostics function, accessible through the programming software or the bit %S78, enables certain non blocking errors linked to the program execution, to be turned into blocking errors. The nature of the error is indicated in the system word %SW 125.

Blocking errors

General

These errors, provoked by the application program, disable its execution but do not cause system errors. On such an error, the application stops immediately and goes to HALT state (the tasks are all stopped in their current instruction).

There are two possibilities for restarting the application:

- by the command INIT through the programming software,
- by the processor RESET button.

The application is now in an initial state: the data has its initial values, the tasks are stopped at the end of the cycle, the input image is updated and the outputs are commissioned in fallback position, and the RUN command enables application restart.

The indication of a blocking error is signaled by the state LEDs (ERR and RUN) flashing and, according to the nature of the error, by the system bit %S11 being set to 1. The nature of the error is indicated in the system word %SW 125.

Diagnostics table:

State LEDs			System	Bits Errors
RUN	ERR	I/O		
F	F	i	%S11=1	Watchdog overrun
F	F	i		Executing the HALT instruction
F	F	i		Executing a non resolved JUMP

Legend:

F: flashing

i: indeterminate

Processor or system errors

General

These serious faults on either **processor** (hardware or software), or on **X-Bus cabling** no longer ensure that the system will function correctly. They cause the PLC to stop in ERROR which requires a cold restart. The next cold restart will be forced into STOP to avoid the PLC falling back into error.

NOTE: When automatic start in RUN is selected in PLC configuration, the restart will be forced in STOP and not in RUN.

Diagnostics table:

State LEDs			System word %SW124	Errors
RUN	ERR	I/O		
Off	On	On	H’80’	System watchdog error or error on X-Bus cabling
Off	On	On	H’81’	Cabling error on X-Bus
Off	On	On		System code error, unforeseen error Overrun of the system task batteries Overrun of the PL7 task batteries

Legend:

On: on

Off: indeterminate

Diagnostics of processor errors:

When the PLC has stopped in error, it is no longer able to communicate with a diagnostics device. The information relating to the errors is only accessible after a cold restart (see system word %SW124). In general, the information is not used by the user, only the information H’80’ and H’81’ can be used to diagnose a cabling error on the X-Bus.

Chapter 9
TSX P57 0244 processors

General Characteristics of the TSX P57 0244 processors

TSX P57 0244 Processors

The following table gives the general characteristics of the TSX P 57 0244 processors.

Characteristics			TSX P57 0244
Maximum configuration	Maximum number of TSX RKY 12EX racks		1
	Maximum number of TSX RKY 4EX/6EX/8EX racks		1
	Maximum number of slots		10
	Maximum number of simultaneous communication EF		16
Functions	Maximum number of channels	In-rack discrete I/O	256
		In-rack analog I/O	12
		Expert (counting, axis, etc.)	4
	Maximum number of connections	Built-in Uni-Telway (terminal port)	1
		Network (ETHWAY, Fipway, Modbus Plus)	1
		Master Fipio (built-in)	-
		Third party field bus	-
		AS-i field bus	1
	Savable real-time clock		yes
Memory	Savable internal RAM		96K8
	PCMCIA memory card (maximum capacity)		128K8
Application structure	Master task		1
	Fast task		1
	Event processing (1 has priority)		32
Application code execution speed:	Internal RAM	100% Boolean	4.76 Kins/ms (1)
		65% Boolean + 35% digital	3.57 Kins/ms (1)
	PCMCIA card	100% Boolean	3.10 Kins/ms (1)
		65% Boolean + 35% digital	2.10 Kins/ms (1)

Characteristics		TSX P57 0244
Execution time	Basic Boolean instruction	0.19/0.25 µs (2)
	Basic digital instruction	0.25/0.50 µs (2)
	Floating point instruction	1.75/3.30 µs (2)
System overhead	Master task	1 ms
	Fast task	0.30 ms

(1) Kins: 1024 instructions (list)

(2) The first value corresponds to the execution time when the application is in the processor's internal RAM, the second value corresponds to the execution time when the application is in a PCMCIA card.

Chapter 10
TSX P57 104 processors

General characteristics of the TSX P57 104 processors

TSX P57 104 processors

The following table gives the general characteristics of the TSX P 57 104 processors.

Characteristics			TSX P57 104
Maximum configuration	Maximum number of TSX RKY 12E racks		2
	Maximum number of TSX RKY 4EX/6EX/8EX racks		4
	Maximum number of slots		27
	Maximum number of simultaneous communication EF		16
Functions	Maximum number of channels	In-rack discrete I/O	512
		In-rack analog I/O	24
		Expert (counting, axis, etc.)	8
	Maximum number of connections	Built-in Uni-Telway (terminal port)	1
		Network (ETHWAY, Fipway, Modbus Plus)	1
		Master Fipio (built-in)	-
		Third party field bus	-
		AS-i field bus	2
	Savable real-time clock		yes
Memory	Savable internal RAM		96K8
	PCMCIA memory card (maximum capacity)		224K8
Application structure	Master task		1
	Fast task		1
	Event processing (1 has priority)		32
Application code execution speed:	Internal RAM	100% Boolean	4.76 Kins/ms (1)
		65% Boolean + 35% digital	3.57 Kins/ms (1)
	PCMCIA card	100% Boolean	3.10 Kins/ms (1)
		65% Boolean + 35% digital	2.10 Kins/ms (1)

Characteristics		TSX P57 104
Execution time	Basic Boolean instruction	0.19/0.25 µs (2)
	Basic digital instruction	0.25/0.50 µs (2)
	Floating point instruction	1.75/3.30 µs (2)
System overhead	Master task	1 ms
	Fast task	0.30 ms

(1) Kins: 1024 instructions (list)

(2) The first value corresponds to the execution time when the application is in the processor's internal RAM, the second value corresponds to the execution time when the application is in a PCMCIA card.

Chapter 11
TSX P57 154 processors

General characteristics of the TSX P57 154 processors

TSX P 57 154 processors

The following table gives the general characteristics of the TSX P57 154 processors.

Characteristics			TSX P 57 154
Maximum configuration	Maximum number of TSX RKY 12EX racks		2
	Maximum number of TSX RKY 4EX/6EX/8EX racks		4
	Maximum number of slots		27
	Maximum number of simultaneous communication EF		16
Functions	Maximum number of channels	In-rack discrete I/O	512
		In-rack analog I/O	24
		Expert (counting, axis, etc.)	8
	Maximum number of connections	Built-in Uni-Telway (terminal port)	1
		Network (ETHWAY, Fipway, Modbus Plus)	1
		Master Fipio (built-in): No. of devices	63
		Third party field bus	0
		AS-i field bus	2
	Savable real-time clock		yes
Memory	Savable internal RAM		96K8
	PCMCIA memory card (maximum capacity)		224K8
Application structure	Master task		1
	Fast task		1
	Event processing (1 has priority)		32
Application code execution speed:	Internal RAM	100% Boolean	4.76 Kins/ms (1)
		65% Boolean + 35% digital	3.57 Kins/ms (1)
	PCMCIA card	100% Boolean	3.10 Kins/ms (1)
		65% Boolean + 35% digital	2.10 Kins/ms (1)

Characteristics		TSX P 57 154
Execution time	Basic Boolean instruction	0.19/0.25 µs (2)
	Basic digital instruction	0.25/0.50 µs (2)
	Floating point instruction	1.75/3.30 µs (2)
System overhead	Master task	1 ms
	Fast task	0.3 ms

(1) Kins: 1024 instructions (list)

(2) The first value corresponds to the execution time when the application is in the processor's internal RAM, the second value corresponds to the execution time when the application is in a PCMCIA card.

Chapter 12
TSX P57 1634 processors

General Characteristics of the TSX P57 1634 processors

TSX P57 1634 Processors

The following table gives the general characteristics of the TSX P 57 1634 processors.

Characteristics			TSX P57 1634
Maximum configuration	Maximum number of TSX RKY 12EX racks		2
	Maximum number of TSX RKY 4EX/6EX/8EX racks		4
	Maximum number of slots		27
	Maximum number of simultaneous communication EF		16
Functions	Maximum number of channels	In-rack discrete I/O	512
		In-rack analog I/O	24
		Expert (counting, axis, etc.)	8
	Maximum number of connections	Built-in Uni-Telway (terminal port)	1
		Network (built-in Ethernet)	1
		Master Fipio (built-in)	-
		Third party field bus	-
		AS-i field bus	2
	Savable real-time clock		yes
Memory	Savable internal RAM		96K8
	PCMCIA memory card (maximum capacity)		224K8
Application structure	Master task		1
	Fast task		1
	Event processing (1 has priority)		32
Application code execution speed:	Internal RAM	100% Boolean	4.76 Kins/ms (1)
		65% Boolean + 35% digital	3.57 Kins/ms (1)
	PCMCIA card	100% Boolean	3.10 Kins/ms (1)
		65% Boolean + 35% digital	2.10 Kins/ms (1)

Characteristics		TSX P57 1634
Execution time	Basic Boolean instruction	0.19/0.25 µs (2)
	Basic digital instruction	0.25/0.50 µs (2)
	Floating point instruction	1.75/3.30 µs (2)
System overhead	Master task	1 ms
	Fast task	0.3 ms

(1) Kins: 1024 instructions (list)

(2) The first value corresponds to the execution time when the application is in the processor's internal RAM, the second value corresponds to the execution time when the application is in a PCMCIA card.

Chapter 13
TSX P57 204 processors

General characteristics of the TSX P57 204 processors

TSX P57 204 processor

The following table gives the general characteristics of the TSX P57 204 processor.

Characteristics			TSX P57 204
Maximum configuration	Maximum number of TSX RKY 12EX racks		8
	Maximum number of TSX RKY 4EX/6EX/8EX racks		16
	Maximum number of slots		111
	Maximum number of simultaneous communication EF		32
Functions	Maximum number of channels	In-rack discrete I/O	1024
		In-rack analog I/O	80
		Expert (counting, axis, etc.)	24
	Maximum number of connections	Built-in Uni-Telway (terminal port)	1
		Network (ETHWAY, Fipway, Modbus Plus)	2
		Master Fipio (built-in)	-
		Third party field bus	1
		AS-i field bus	4
	Savable real-time clock		yes
	Process control channels		10
	Process control loops		30
Memory	Savable internal RAM		160K8
	PCMCIA memory card (maximum capacity)		768K8
Application structure	Master task		1
	Fast task		1
	Event processing (1 has priority)		64
Application code execution speed	Internal RAM	100% Boolean	4.76 Kins/ms (1)
		65% Boolean + 35% digital	3.57 Kins/ms (1)
	PCMCIA card	100% Boolean	3.70 Kins/ms (1)
		65% Boolean + 35% digital	2.50 Kins/ms (1)

Characteristics		TSX P57 204
Execution time	Basic Boolean instruction	0.19/0.21 µs (2)
	Basic digital instruction	0.25/0.42 µs (2)
	Floating point instruction	1.75/3.0 µs
System overhead	Master task	1 ms
	Fast task	0.30 ms

(1) Kins: 1024 instructions (list)

(2) The first value corresponds to the execution time when the application is in the processor's internal RAM, the second value corresponds to the execution time when the application is in a PCMCIA card.

Chapter 14
TSX P57 254 processors

General characteristics of the TSX P57 254 processors

TSX P57 254 processor

The following table gives the general characteristics of the TSX P57 254 processor.

Characteristics			TSX P57 254
Maximum configuration	Maximum number of TSX RKY 12EX racks		8
	Maximum number of TSX RKY 4EX/6EX/8EX racks		16
	Maximum number of slots		111
	Maximum number of simultaneous communication EF		32
Functions	Maximum number of channels	In-rack discrete I/O	1024
		In-rack analog I/O	80
		Expert	24
	Maximum number of connections	Built-in Uni-Telway (terminal port)	1
		Network (ETHWAY, Fipway, Modbus Plus)	2
		Fipio master (built-in), number of devices	127
		Third party field bus	1
		AS-i field bus	4
	Savable real-time clock		yes
	Process control channel		10
	Process control loops		30
Memory	Savable internal RAM		192K8
	PCMCIA memory card (maximum capacity)		768K8
Application structure	Master task		1
	Fast task		1
	Event processing (1 has priority)		64
Application code execution speed	Internal RAM	100% Boolean	4.76 Kins/ms (1)
		65% Boolean + 35% digital	3.57 Kins/ms (1)
	PCMCIA card	100% Boolean	3.70 Kins/ms (1)
		65% Boolean + 35% digital	2.50 Kins/ms (1)

Characteristics			TSX P57 254
Execution time	Basic Boolean instruction		0.19/0.21 µs (2)
	Basic digital instruction		0.25/0.42 µs (2)
	Floating point instruction		1.75/3.0 µs (2)
System overhead	MAST task	without using the Fipio bus	1 ms
		using the Fipio bus	1 ms
	FAST task		0.35 ms

(1) Kins: 1024 instructions (list)

(2) The first value corresponds to the execution time when the application is in the processor's internal RAM, the second value corresponds to the execution time when the application is in a PCMCIA card.

Chapter 15
TSX P57 2634 processors

General Characteristics of the TSX P57 2634 processors

TSX P 57 2634 processors

The following table gives the general characteristics of the TSX P 57 2634 processor.

Characteristics			TSX P 57 2634
Maximum configuration	Maximum number of TSX RKY 12EX racks		8
	Maximum number of TSX RKY 4EX/6EX/8EX racks		16
	Maximum number of slots		111
	Maximum number of simultaneous communication EF		32
Functions	Maximum number of channels	In-rack discrete I/O	1024
		In-rack analog I/O	80
		Expert (counting, axis, etc.)	24
	Maximum number of connections	Built-in Uni-Telway (terminal port)	1
		Network (Ethway, Fipway, Modbus Plus and integrated Ethernet)	2
		Master Fipio (built-in)	-
		Third party field bus	1
		AS-i field bus	4
	Savable real-time clock		yes
	Process control channel		10
	Process control loop		30
Memory	Savable internal RAM		160K8
	PCMCIA memory card (maximum capacity)		768K8
Application structure	Master task		1
	Fast task		1
	Event processing (1 has priority)		64
Application code execution speed	Internal RAM	100% Boolean	4.76 Kins/ms (1)
		65% Boolean + 35% digital	3.57 Kins/ms (1)
	PCMCIA card	100% Boolean	3.70 Kins/ms (1)
		65% Boolean + 35% digital	2.50 Kins/ms (1)

Characteristics		TSX P 57 2634
Execution time	Basic Boolean instruction	0.19/0.21 µs (2)
	Basic digital instruction	0.25/0.42 µs (2)
	Floating point instruction	1.75/3.0 µs
System overhead	Master task	1 ms
	Fast task	0.30 ms

(1) Kins: 1024 instructions (list)

(2) The first value corresponds to the execution time when the application is in the processor's internal RAM, the second value corresponds to the execution time when the application is in a PCMCIA card.

Chapter 16
TSX P57 304 processors

General characteristics of the TSX P57 304 processors

TSX P57 304 processor

The following table gives the general characteristics of the TSX P57 304 processor.

Characteristics			TSX P57 304
Maximum configuration	Maximum number of TSX RKY 12EX racks		8
	Maximum number of TSX RKY 4EX/6EX/8EX racks		16
	Maximum number of slots		111
	Maximum number of simultaneous communication EF		48
Functions	Maximum number of channels	In-rack discrete I/O	1024
		In-rack analog I/O	128
		Expert	32
	Maximum number of connections	Built-in Uni-Telway (terminal port)	1
		Network (ETHWAY, Fipway, Modbus Plus)	3
		Master Fipio (built-in)	-
		Third party field bus	3
		AS-i field bus	8
	Savable real-time clock		yes
	Process control channels		15
	Process control loops		45
Memory	Savable internal RAM		192K8
	PCMCIA memory card (maximum capacity)		1792K8
Application structure	Master task		1
	Fast task		1
	Event processing (1 has priority)		64
Application code execution speed	Internal RAM	100% Boolean	6.67 Kins/ms (1)
		65% Boolean + 35% digital	4.76 Kins/ms (1)
	PCMCIA card	100% Boolean	4.55 Kins/ms (1)
		65% Boolean + 35% digital	3.13 Kins/ms (1)

Characteristics		TSX P57 304
Execution time	Basic Boolean instruction	0.12/0.17 µs (2)
	Basic digital instruction	0.17/0.33 µs (2)
	Floating point instruction	1.75/3.0 µs
System overhead	Master task	1 ms
	Fast task	0.35 ms

(1) Kins: 1024 instructions (list)

(2) The first value corresponds to the execution time when the application is in the processor's internal RAM, the second value corresponds to the execution time when the application is in a PCMCIA card.

Chapter 17
TSX P57 354 processors

General Characteristics of the TSX P57 354 processors

TSX P57 354 Processor

The following table gives the general characteristics of the TSX P57 354 processor.

Characteristics			TSX P57 354
Maximum configuration	Maximum number of TSX RKY 12EX racks		8
	Maximum number of TSX RKY 4EX/6EX/8EX racks		16
	Maximum number of slots		111
	Maximum number of simultaneous communication EF		48
Functions	Maximum number of channels	In-rack discrete I/O	1024
		In-rack analog I/O	128
		Application	32
	Maximum number of connections	Built-in Uni-Telway (terminal port)	1
		Network (ETHWAY, Fipway, Modbus Plus)	3
		Master Fipio (built-in): No. of devices	127
		Third party field bus	3
		AS-i field bus	8
	Savable real-time clock		yes
	Process control channels		15
	Process control loops		45
Memory	Savable internal RAM		208K8
	PCMCIA memory card (maximum capacity)		1792K8
Application structure	Master task		1
	Fast task		1
	Event processing (1 has priority)		64
Application code execution speed	Internal RAM	100% Boolean	6.67 Kins/ms (1)
		65% Boolean + 35% digital	4.76 Kins/ms (1)
	PCMCIA card	100% Boolean	4.55 Kins/ms (1)
		65% Boolean + 35% digital	3.13 Kins/ms (1)

Characteristics		TSX P57 354
Execution time	Basic Boolean instruction	0.12/0.17 µs (2)
	Basic digital instruction	0.17/0.33 µs (2)
	Floating point instruction	1.75/3.0 µs
System overhead	Master task	1 ms
	Fast task	0.35 ms

(1) Kins: 1024 instructions (list)

(2) The first value corresponds to the execution time when the application is in the processor's internal RAM, the second value corresponds to the execution time when the application is in a PCMCIA card.

Chapter 18
TSX P57 3634 processors

General characteristics of the TSX P57 3634 processors

TSX P57 3634 processor

The following table gives the general characteristics of the TSX P57 3634 processor.

Characteristics			TSX P57 3634
Maximum configuration	Maximum number of TSX RKY 12EX racks		8
	Maximum number of TSX RKY 4EX/6EX/8EX racks		16
	Maximum number of slots		111
	Maximum number of simultaneous communication EF		48
Functions	Maximum number of channels	In-rack discrete I/O	1024
		In-rack analog I/O	128
		Expert	32
	Maximum number of connections	Built-in Uni-Telway (terminal port)	1
		Network (ETHWAY, Fipway, Modbus Plus, integrated Ethernet)	3
		Master Fipio (built-in)	-
		Third party field bus	3
		AS-i field bus	8
	Savable real-time clock		yes
	Process control channels		15
	Process control loops		45
Memory	Savable internal RAM		192K8
	PCMCIA memory card (maximum capacity)		1792K8
Application structure	Master task		1
	Fast task		1
	Event processing (1 has priority)		64
Application code execution speed	Internal RAM	100% Boolean	6.67 Kins/ms (1)
		65% Boolean + 35% digital	4.76 Kins/ms (1)
	PCMCIA card	100% Boolean	4.55 Kins/ms (1)
		65% Boolean + 35% digital	3.13 Kins/ms (1)

Characteristics		TSX P57 3634
Execution time	Basic Boolean instruction	0.12/0.17 µs (2)
	Basic digital instruction	0.17/0.33 µs (2)
	Floating point instruction	1.75/3.0 µs
System overhead	Master task	1 ms
	Fast task	0.35 ms

(1) Kins: 1024 instructions (list)

(2) The first value corresponds to the execution time when the application is in the processor's internal RAM, the second value corresponds to the execution time when the application is in a PCMCIA card.

Chapter 19
TSX P57 454 processors

General characteristics of the TSX P57 454 processors

TSX P57 454 processor

The following table gives the general characteristics of the TSX P57 454 processor.

Characteristics			TSX P57 454
Maximum configuration	Maximum number of TSX RKY 12EX racks		8
	Maximum number of TSX RKY 4EX/6EX/8EX racks		16
	Maximum number of slots		111
	Maximum number of simultaneous communication EF		64
Functions	Maximum number of channels	In-rack discrete I/O	2048
		In-rack analog I/O	256
		Expert	64
	Maximum number of connections	Built-in Uni-Telway (terminal port)	1
		Network (ETHWAY, Fipway, Modbus Plus)	4
		Master Fipio (built-in): No. of devices	127
		Third party field bus	4
		AS-i field bus	8
	Savable real-time clock		yes
	Process control channels		20
	Process control loops		60
Memory	Savable internal RAM		440K8
	PCMCIA memory card (maximum capacity)		2048K8
Application structure	Master task		1
	Fast task		1
	Event processing (1 has priority)		64
Application code execution speed	Internal RAM	100% Boolean	15,5 Kins/ms (1)
		65% Boolean + 35% digital	11,4 Kins/ms (1)
	PCMCIA card	100% Boolean	15,5 Kins/ms (1)
		65% Boolean + 35% digital	11,4 Kins/ms (1)

Characteristics		TSX P57 454
Execution time	Basic Boolean instruction	0.039/0.047 µs (2)
	Basic digital instruction	0.047/0.064 µs (2)
	Floating point instruction	0.71/0.87 µs (2)
System overhead	Master task	1 ms
	Fast task	0.08 ms

(1) Kins: 1024 instructions (list)

(2) The first value corresponds to the execution time when the application is in the processor's internal RAM, the second value corresponds to the execution time when the application is in a PCMCIA card.

Chapter 20
TSX P57 4634 processors

General Characteristics of the TSX P57 4634 processors

TSX P57 4634 processor

The following table gives the general characteristics of the TSX P57 4634 processor.

Characteristics			TSX P57 4634
Maximum configuration	Maximum number of TSX RKY 12EX racks		8
	Maximum number of TSX RKY 4EX/6EX/8EX racks		16
	Maximum number of slots		111
	Maximum number of simultaneous communication EF		64
Functions	Maximum number of channels	In-rack discrete I/O	2048
		In-rack analog I/O	256
		Expert	64
	Maximum number of connections	Built-in Uni-Telway (terminal port)	1
		Network (Ethernet TCP-IP, Fipway(1), Modbus Plus, integrated Ethernet)	4
		Third party field bus	4
		AS-i field bus	8
	Savable real-time clock		yes
	Process control channels		20
	Process control loops		60
Memory	Savable internal RAM		440K8
	PCMCIA memory card (maximum capacity)		2048K8
Application structure	Master task		1
	Fast task		1
	Event processing (1 has priority)		64
Application code execution speed	Internal RAM	100% Boolean	15.5 Kins/ms (1)
		65% Boolean + 35% digital	11.4 Kins/ms (1)
	PCMCIA card	100% Boolean	15.5 Kins/ms (1)
		65% Boolean + 35% digital	11.4 Kins/ms (1)

Characteristics		TSX P57 4634
Execution time	Basic Boolean instruction	0.039/0.047 µs (2)
	Basic digital instruction	0.047/0.064 µs (2)
	Floating point instruction	0.71/0.87 µs (2)
System overhead	Master task	1 ms
	Fast task	0.08 ms

(1) Kins: 1024 instructions (list)

(2) The first value corresponds to the execution time when the application is in the processor's internal RAM, the second value corresponds to the execution time when the application is in a PCMCIA card.

Chapter 21
TSX P57 554 processors

General Characteristics of the TSX P57 554 processors

TSX P57 554 processor

The following table gives the general characteristics of the TSX P57 554 processor.

Characteristics			TSX P57 554
Maximum configuration	Maximum number of TSX RKY 12EX racks		8
	Maximum number of TSX RKY 4EX/6EX/8EX racks		16
	Maximum number of slots		111
	Maximum number of simultaneous communication EF		80
Functions	Maximum number of channels	In-rack discrete I/O	2048
		In-rack analog I/O	512
		Application	64
	Maximum number of connections	Built-in Uni-Telway (terminal port)	1
		Network (ETHWAY, Fipway, Modbus Plus)	4
		Master Fipio (built-in): No. of devices	127
		Third party field bus	5
		AS-i field bus	8
	Savable real-time clock		yes
	Process control channels		30
	Process control loops		90
Memory	Savable internal RAM		1024K8 (1)
	PCMCIA memory card (maximum capacity)		7168K8
Application structure	Master task		1
	Fast task		1
	Auxiliary task		4
	Event processing (1 has priority)		128
Application code execution speed	Internal RAM	100% Boolean	19.80 Kins/ms (2)
		65% Boolean + 35% digital	14.20 Kins/ms (2)
	PCMCIA card	100% Boolean	19.80 Kins/ms (2)
		65% Boolean + 35% digital	14.20 Kins/ms (2)

Characteristics		TSX P57 554
Execution time	Basic Boolean instruction	0.0375/0.045 µs
	Basic digital instruction	0.045/0.06 µs
	Floating point instruction	0.48/0.56 µs
System overhead	Master task	1 ms
	Fast task	0.07ms

(1) 1st figure when the application is in internal RAM, 2nd figure when the application is in card memory.

(2) Kins: 1024 instructions (list)

Chapter 22
TSX P57 5634 processors

General Characteristics of the TSX P57 5634 processors

TSX P57 5634 processor

The following table gives the general characteristics of the TSX P57 5634 processor.

Characteristics			TSX P57 5634
Maximum configuration	Maximum number of TSX RKY 12EX racks		8
	Maximum number of TSX RKY 4EX/6EX/8EX racks		16
	Maximum number of slots		111
	Maximum number of simultaneous communication EF		80
Functions	Maximum number of channels	In-rack discrete I/O	2048
		In-rack analog I/O	512
		Application	64
	Maximum number of connections	Built-in Uni-Telway (terminal port)	1
		Network (Ethernet TCP-IP, Fipway(1), Modbus Plus, integrated Ethernet)	4
		Third party field bus	5
		AS-i field bus	8
	Savable real-time clock		yes
	Process control channels		30
	Process control loops		90
Memory	Savable internal RAM		1024K8 (2)
	PCMCIA memory card (maximum capacity)		7168K8
	Maximum memory size		8192K8
Application structure	Master task		1
	Fast task		1
	Auxiliary task		4
	Event processing (1 has priority)		128

Characteristics			TSX P57 5634
Application code execution speed	Internal RAM	100% Boolean	19.80 Kins/ms (3)
		65% Boolean + 35% digital	14.20 Kins/ms (3)
	PCMCIA card	100% Boolean	19.80 Kins/ms (3)
		65% Boolean + 35% digital	14.20 Kins/ms (3)
Execution time	Basic Boolean instruction		0.0375/0.045 µs
	Basic digital instruction		0.045/0.06 µs
	Floating point instruction		0.48/0.56 µs
System overhead	Master task		1 ms
	Fast task		0.07ms

(1) The TSX FPP20 FIPWAY PCMCIA card cannot be used in the slot for the processor's PCMCIA card.

(2) 1st figure when the application is in internal RAM, 2nd figure when the application is in card memory.

(3) Kins: 1024 instructions (list)

Chapter 23
TSX P57 6634 processors

General Characteristics of the TSX P57 6634 processors

TSX P57 6634 processor

The following table gives the general characteristics of the TSX P57 6634 processor.

Characteristics			TSX P57 6634
Maximum configuration	Maximum number of TSX RKY 12EX racks		8
	Maximum number of TSX RKY 4EX/6EX/8EX racks		16
	Maximum number of slots		111
	Maximum number of simultaneous communication EF		96
Functions	Maximum number of channels	In-rack discrete I/O	2048
		In-rack analog I/O	512
		Application	64
	Maximum number of connections	Built-in Uni-Telway (terminal port)	1
		Network (Ethernet TCP-IP, Fipway(1), Modbus Plus, integrated Ethernet)	4
		Third party field bus	5
		AS-i field bus	8
	Savable real-time clock		yes
	Process control channels		30
	Process control loops		90
Memory	Savable internal RAM		2048K8
	PCMCIA memory card (maximum capacity)		7168K8
	Maximum memory size		6976K8
Application structure	Master task		1
	Fast task		1
	Auxiliary task		4
	Event processing (1 has priority)		128

Characteristics			TSX P57 6634
Application code execution speed	Internal RAM	100% Boolean	19.80 Kins/ms (3)
		65% Boolean + 35% digital	14.20 Kins/ms (3)
	PCMCIA card	100% Boolean	19.80 Kins/ms (3)
		65% Boolean + 35% digital	14.20 Kins/ms (3)
Execution time	Basic Boolean instruction		0.0375/0.045 µs
	Basic digital instruction		0.045/0.06 µs
	Floating point instruction		0.48/0.56 µs
System overhead	Master task		1 ms
	Fast task		0.07ms

(1) The TSX FPP20 FIPWAY PCMCIA card cannot be used in the slot for the processor's PCMCIA card.

(2) 1st figure when the application is in internal RAM, 2nd figure when the application is in card memory.

(3) Kins: 1024 instructions (list)

Chapter 24
TSX H57 24M processors

General Characteristics of the TSX H57 24M processors

TSX H57 24M processor

The following table gives the general characteristics of the TSX H57 24M processor.

Characteristics			TSX H57 24M
Maximum configuration	Maximum number of TSX RKY 12EX racks		8
	Maximum number of TSX RKY 4EX/6EX/8EX racks		16
	Maximum number of slots		111
	Maximum number of simultaneous communication EF		32
Functions	Maximum number of channels	In-rack discrete I/O	1024
		In-rack analog I/O	80
		Expert (counting, axis, motion, weighing)	0
		active on TSX SCP 114 or TSX SCY •601	24
	Maximum number of connections	Built-in Uni-Telway (terminal port)	1
		Network (Ethernet TCP-IP)	2
		Third party field bus	0
		AS-i field bus	0
	Savable real-time clock		yes
	Process control channels		10
	Process control loops		30
Memory	Savable internal RAM		192 kilobytes
	PCMCIA memory card (maximum capacity)		768 kilobytes
Application structure	Mast task		1
	Fast task		1
	Event processing (1 has priority)		64
Application code execution speed	Internal RAM	100% Boolean	15.75 Kins/ms
		65% Boolean + 35% digital	11.40 Kins/ms
	PCMCIA card	100% Boolean	15.75 Kins/ms
		65% Boolean + 35% digital	11.40 Kins/ms

Characteristics		TSX H57 24M
Execution time	Basic Boolean instruction	0.039/0.057 µs
	Basic digital instruction	0.054/0.073 µs
	Floating point instruction	0.55/0.63 µs
System overhead	Mast task	1 ms
	Fast task	0.08 ms

NOTE: The PCMCIA communication card cannot be used in the processor's PCMCIA card slots.

Chapter 25
TSX H57 44M processors

General Characteristics of the TSX H57 44M processors

TSX H57 44M processor

The following table gives the general characteristics of the TSX H57 44M processor.

Characteristics			TSX H57 44M
Maximum configuration	Maximum number of TSX RKY 12EX racks		8
	Maximum number of TSX RKY 4EX/6EX/8EX racks		16
	Maximum number of slots		111
	Maximum number of simultaneous communication EF		64
Functions	Maximum number of channels	In-rack discrete I/O	2048
		In-rack analog I/O	256
		Expert (counting, axis, motion, weighing)	0
		active on TSX SCP 114 or TSX SCY •601	64
	Maximum number of connections	Built-in Uni-Telway (terminal port)	1
		Network (Ethernet TCP-IP)	4
		Third party field bus	0
		AS-i field bus	0
	Savable real-time clock		yes
	Process control channels		20
	Process control loops		60
Memory	Savable internal RAM		440 kilobytes
	PCMCIA memory card (maximum capacity)		2048 kilobytes
Application structure	Mast task		1
	Fast task		1
	Event processing (1 has priority)		64
Application code execution speed	Internal RAM	100% Boolean	15.75 Kins/ms
		65% Boolean + 35% digital	11.40 Kins/ms
	PCMCIA card	100% Boolean	15.75 Kins/ms
		65% Boolean + 35% digital.	11.40 Kins/ms

Characteristics		TSX H57 44M
Execution time	Basic Boolean instruction	0.039/0.057 µs
	Basic digital instruction	0.054/0.073 µs
	Floating point instruction	0.55/0.63 µs
System overhead	Master task	1 ms
	Fast task	0.08 ms

NOTE: The PCMCIA communication card cannot be used in the processor's PCMCIA card slots.

Chapter 26
Premium TSX P57/TSX H57 processor: general characteristics

Aim of this Chapter

The aim of this Chapter is to introduce the characteristics of devices that can be used when installing a TSX P57/TSX H57 station.

What Is in This Chapter?

This chapter contains the following topics:

Topic	Page
Features of Premium Processors	176
Electrical Characteristics of the TSX P57/TSX H57 Processors and Devices Which Can Be Connected or Integrated	177
Defining and counting application-specific channels	180

Features of Premium Processors

Specifications

A Premium processor comprises:

- a general-usage processor,
- a processor dedicated to command control.

The following table gives the general characteristics of the various processors:

Processor	Main processor	Main processor frequency (MHz)	Automation Processor	Automation processor frequency (MHz)
TSX P57 CA0244M	INTEL or AMD 486	48	SONIX	48
TSX P57 CD0244M	INTEL or AMD 486	48	SONIX	48
TSX PCI57 204M	INTEL or AMD 486	72	SONIX	48
TSX PCI57 354M	INTEL or AMD 486	72	SONIX	48
TSX P57 0244M	INTEL or AMD 486	48	SONIX	48
TSX P57 104M	INTEL or AMD 486	48	SONIX	48
TSX P57 1634M	INTEL or AMD 486	48	SONIX	48
TSX P57 154M	INTEL or AMD 486	48	SONIX	48
TSX P57 204M	INTEL or AMD 486	72	SONIX	48
TSX P57 2634M	INTEL or AMD 486	72	SONIX	48
TSX P57 254M	INTEL or AMD 486	72	SONIX	48
TSX P57 304M	INTEL or AMD 486	72	SONIX	48
TSX P57 3634M	INTEL or AMD 486	72	SONIX	48
TSX P57 354M	INTEL or AMD 486	72	SONIX	48
TSX P57 4634M	INTEL PENTIUM 166/266 MMX	166	PHOENIX	66
TSX P57 454M	INTEL PENTIUM 166/266 MMX	166	PHOENIX	66
TSX P57 5634M	INTEL PENTIUM 166/266 MMX	166	PHOENIX	66
TSX P57 554M	INTEL PENTIUM 166/266 MMX	166	PHOENIX	66
TSX P57 6634M	INTEL PENTIUM 166/266 MMX	166	PHOENIX	66
TSX H57 24M	INTEL PENTIUM 166/266 MMX	166	PHOENIX	66
TSX H57 44M	INTEL PENTIUM 166/266 MMX	166	PHOENIX	66

Electrical Characteristics of the TSX P57/TSX H57 Processors and Devices Which Can Be Connected or Integrated

General Points

As the processors can be fitted with certain devices which do not have their own power supply, the consumption of these devices must be taken into account when establishing a global breakdown of power consumption.

- Devices without their own power supply which can be connected to the terminal port:
  - Adjustment terminal: **T FTX 117 ADJUST**,
  - TSX P ACC01 unit for connecting to the Uni-Telway bus.
- Devices without their own power supply which can be built into the processor:
  - PCMCIA memory cards,
  - PCMCIA communication cards TSX FPP 10/20,
  - PCMCIA communication card TSX SCP 111/112/114,
  - PCMCIA communication card TSX MBP 100.

Consumption (PCMCIA Memory Cards + Processors)

This table shows the consumption of the TSX PSY/TSX H57 supply module at 5VDC:

Processor + PCMCIA memory card	Typical consumption	Maximum consumption
TSX P57 0244	750 mA	1050 mA
TSX P57 104	750 mA	1050 mA
TSX P57 154	830 mA	1160 mA
TSX P57 1634	1550 mA	2170 mA
TSX P57 204	750 mA	1050 mA
TSX P57 254	830 mA	1160 mA
TSX P572634	1550 mA	2170 mA
TSX P57304	1000 mA	1400 mA
TSX P57 354	1080 mA	1510 mA
TSX P57 3634	1800 mA	2520 mA
TSX P57 454	1580 mA	2210 mA
TSX P574634	1780 mA	2490 mA
TSX P57 554,	1580 mA	2210 mA
TSX P57 5634	1780 mA	2490 mA
TSX P57 6634	1780 mA	2490 mA
TSX H57 24M	1780 mA	2492 mA
TSX H57 44M	1780 mA	2492 mA

Power Dissipation (PCMCIA Memory Cards + Processors)

This table states the dissipated power for **TSX P57/TSX H57** processors:

Processor + PCMCIA memory card	typical	maximum
TSX P57 0244	3.7 W	5.2 W
TSX P57 104	3.7 W	5.2 W
TSX P57 154	4.1 W	5.8 W
TSX P57 1634	7.7 W	10.8 W
TSX P57 204	3.7 W	5.2 W
TSX P57 254	4.1 W	5.8 W
TSX P57 2634	7.7 W	10.8 W
TSX P57304	5.0 W	7.0 W
TSX P57 354	5.4 W	7.5 W
TSX P57 3634	9 W	12.6 W
TSX P57 454	7.9 W	11 W
TSX P57 4634	8.9 W	12.5 W
TSX P57 554	7.9 W	11 W
TSX P57 5634	8.9 W	12.5 W
TSX P57 6634	8.9 W	12.5 W
TSX H57 24M	9.1 W	12.7 W
TSX H57 44M	9.1W	12.7 W

Power Consumption of Devices Which Can Be Connected and Integrated Into the Processors

Power consumption:

Power consumption on 5VDC of the TSX PSY power supply etc.		Typical	Maximum
Devices without their own power supply which can be connected to the terminal port (TER)	TFTX 117 ADJUST	310mA	340 mA
	TSXPACC01	150mA	250 mA
PCMCIA communication card which can be integrated in the processor	TSXFPP10	330 mA	360 mA
	TSXFPP20 (1)	330 mA	360 mA
	TSXSCP111	140 mA	300 mA
	TSXSCP112	120 mA	300 mA
	TSXSCP114	150 mA	300 mA
	TSXMBP100	220 mA	310 mA

(1) cannot be integrated into the TSX P57 5634/6634 processors.

Power Dissipation of Devices Which Can Be Connected and Integrated in the Processors

Dissipated power:

Power dissipation		Typical	Maximum
Devices without their own power supply which can be connected to the terminal port (TER)	TFTX 117 ADJUST	1.5 W	1.7 W
	TSXPACC01	0.5 W	1.25 W
PCMCIA communication card which can be integrated in the processor	TSXFPP10	1.65 W	1.8 W
	TSXFPP20 (1)	1.65 W	1.8 W
	TSXSCP111	0.7 W	1.5 W
	TSXSCP112	0.6 W	1.5 W
	TSXSCP114	0.75 W	1.5 W
	TSXMBP100	1.1 W	1.55 W

(1) cannot be integrated into the TSX P57 5634 processor

Defining and counting application-specific channels

Summary table

Applications:

Application		Module/card	Application-specific channels	Number
Counting		TSXCTY2A	Yes	2
		TSXCTY2C	Yes	2
		TSXCTY4A	Yes	4
Movement control		TSXCAY21	Yes	2
		TSXCAY41	Yes	4
		TSXCAY22	Yes	2
		TSXCAY42	Yes	4
		TSXCAY33	Yes	3
Step by step control		TSXCFY11	Yes	1
		TSXCFY21	Yes	2
Weighing		TSXISPY101	Yes	1
Communication Serial link		TSXSCP11. in the processor	No	0(*)
		TSXSCP11. in the TSXSCY21.	Yes	1
		TSXSCP11. in the TSXSCY21.	Yes	1
		TSXSCY 21 (built-in channel)	Yes	1
	Fipio agent	TSXFPP10 in the processor	No	0(*)
	Master Fipio	Built into the processor	No	0(*)
	Ethernet	Built into the processor	No	0(*)

(*) Although these channels are application-specific, they should not be taken into account when calculating the maximum number of application-specific channels which can be supported by the processor.

NOTE: Only channels configured from programming software can be counted.

Chapter 27
Processor performance

Aim of this Chapter

This Chapter describes processor performance.

What Is in This Chapter?

This chapter contains the following topics:

Topic	Page
MAST task cycle time: introduction	182
MAST Task Cycle Time: Program Processing Ppt	183
MAST Task Cycle Time: Input/Output Internal Processing	184
Example of the calculation of cycle times of a MAST task under the following conditions	187
FAST Task Cycle Time	189
Event Response Time	190

MAST task cycle time: introduction

Explanatory diagram

The following diagram describes the MAST task cycle time:

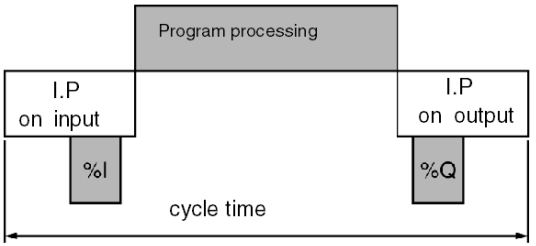

IP = internal

MAST CYCLE TIME = Program processing time (Ppt) + input/output internal processing time (Ipt):

MAST Task Cycle Time: Program Processing Ppt

Definition of Ppt Program Processing Time

Ppt = Application code execution time (Apcet).

Application Code Execution Time (Apcet)

Apcet = sum of the times of each instruction carried out by the application program in each cycle.

The execution time of each instruction as well as the type of application which has been used to check them are given in the reference manual.

The table below gives the execution times in milliseconds (ms) for a 1K instruction (1024 instructions):

Processors	Application code execution time Apcet (1)			
	Internal RAM		PCMCIA card	
	100% Boolean	65% Boolean + 35% digital	100% Boolean	65% Boolean + 35% digital
TSX P57 0244 TSX P57 104/1634 TSX P57 154	0.21 ms	0.28 ms	0.32 ms	0.49 ms
TSX P57 204/254/2634 TSX PCI 57 204	0.21 ms	0.28 ms	0.27 ms	0.40 ms
TSX P57 304/354/3634 TSX PCI 57 354	0.15 ms	0.21 ms	0.22 ms	0.32 ms
TSX P57 454/4634 TSX H57 24M/44M	0.06 ms	0.09 ms	0.06 ms	0.09 ms
TSX P57 554/5634/6634	0.05 ms	0.07 ms	0.05 ms	0.07 ms

(1) With all the instructions executed in each PLC cycle.

MAST Task Cycle Time: Input/Output Internal Processing

Definition of Input and Output Internal Processing Time (Ipt)

Ipt = MAST task overhead system time (Most)

+ max [receiving communication system Time (rcomT); management time on input of implicit I/O %I (mTi%I)]

+ [sending communication system Time (scomT); management time on output of implicit I/O %Q (mTo%Q)]

MAST Task Overhead System Time (Most)

Summary table:

Processors	Time without Fipio application	Time with Fipio application
TSX 57 0244	1 ms	-
TSX 57 104	1 ms	-
TSX 57 1634	1 ms	-
TSX 57 154	1 ms	(1)
TSX P57 204 TSX PCI 57 204	1 ms	-
TSX P57 254	1 ms	(1)
TSX P57 2634	1 ms	-
TSX P57 304	1 ms	-
TSX P57 354 TSX PCI 57 354 TSX P57 3634	1 ms	(1) (1) -
TSX P57 454 TSX P57 4634 TSX H57 24M/44M	1 ms	(1) - -
TSX P57 554	1 ms	(1)
TSX P57 5634/6634	1 ms	-
(1) information available in Control Expert. **NOTE:** Information is also available in Unity Pro version later than V2.0 (Unity Pro is the old name of Control Expert for versions ≤ V13.1).		

Management Time on Input/Output of Implicit I/O %I and %Q

mTi%I = 60 micro seconds + sum of the IN times of each module.

mTo%Q = 60 micro seconds + sum of the OUT times of each module.

Management time on input (IN) and on output (OUT) for each module:

Module type	Management time		
	On input (IN)	On output (OUT)	Total (IN+OUT)
8 channel discrete inputs	27 µs	-	27 µs
16 channel discrete inputs (all modules except TSX DEY 16FK)	27 µs	-	27 µs
32 channel discrete inputs	48 µs	-	48 µs
64 channel discrete inputs	96 µs	-	96 µs
Fast discrete inputs (8 channels used) (TSX DEY 16FK/TSXDMY 28FK module)	29 µs	16 µs	45 µs
Fast discrete inputs (16 channels used) (TSX DEY 16FK/TSXDMY 28FK/28RFK module)	37 µs	22 µs	59 µs
8 channel discrete outputs	26 µs	15 µs	41 µs
16 channel discrete outputs	33 µs	20 µs	53 µs
32 channel discrete outputs	47 µs	30 µs	77 µs
64 channel discrete outputs	94 µs	60 µs	154 µs
Analog inputs (in groups of 4 channels)	84 µs	-	84 µs
Analog outputs (4 channels)	59 µs	59 µs	118 µs
Counting (TSX CTY 2A/4A), by channel	55 µs	20 µs	75 µs
Counting (TSX CTY 2C), by channel	65 µs	21 µs	86 µs
Step by step control (TSX CFY **..**), by channel	75 µs	20 µs	95 µs
Axis control (TSX CAY **..**), by channel	85 µs	22 µs	107 µs

NOTE: Discrete input/output module times are given based on the assumption that all channels of the module are assigned to the same task.
Example: Using a TSX DEY 32 D2 K module

- If the 32 channels are assigned to the same task, use the "32 channel discrete inputs" time,
- If only 16 channels are assigned to the same task, use the "16 channel discrete inputs" time and not the "32 channel discrete input" time divided by 2.

Communication System Time

Communication (except telegram) is made during MAST task "Internal Processing" phases:

- On input for receiving messages (rcomT),
- On outputs for sending messages (scomT).

The MAST task cycle time is therefore affected by communication traffic. Communication time through each cycle varies considerably according to:

- Traffic generated by the processor: The number of simultaneously active communication EFs,
- Traffic generated from other devices to the processor or for which the processor ensures a traffic routing function like the master.

This time only applies in the cycles where there is a new message to be managed.

Send/receive time:

Processors	Send/receive time (1)
TSX P57 0244/104/1634/154	2 ms
TSX P57 204/254/2634 TSX PCI 57 204	1.5 ms
TSX P57 304/354/3634 TSX PCI 57 354 TSX P57 454/4634 TSX H57 24M/44M	1.5 ms 1.5 ms 0.6 ms 0.6 ms
TSX 57 554/5634/6634	0.4 ms

(1) including processing by the protocol drivers.

NOTE: These times cannot be combined in the same cycle. Transmission occurs in the same cycle as instruction execution as long as communication traffic remains light, but the reply is not received in the same cycle.

Example with terminal (with programming software) connected and animation table open

Processors	Average time per cycle	Maximum time per cycle
TSX P57 0244/104/1634/154	2 ms	3 ms
TSX P57 204/254/2634 TSX PCI 57 204	2 ms	3 ms
TSX P57 304/354/3634 TSX PCI 57 354 TSX P57 454/4634 TSX H57 24M/44M	2 ms 2 ms 1 ms	3 ms 3 ms 1.5 ms
TSX P57 554/5634/6634	0.6 ms	1 ms

Example of the calculation of cycle times of a MAST task under the following conditions

Context

An application with the following characteristics:

- TSX P57 204 processor,
- Execution of a program in PLC internal RAM,
- 10 K instructions: 65% Boolean + 35% digital,
- a communication EF of the type SEND_REQ (for a TSX PSX 204 the execution time is 0.75 ms),
- 128 discrete inputs distributed over 7 TSX DEY 16D2 modules + 1 TSX DEY 16FK module,
- 80 discrete outputs, distributed over 5 TSX DSY 16T2 modules,
- 32 analog inputs, distributed over 2 TSX AEY 1600 modules,
- 16 analog inputs, distributed over 4 TSX ASY 410 modules,
- 2 upcounting channels, distributed over 1 TSX CTY 2A module.

Calculation of the different times

Application code execution time (APCET):

- without communication EF: 10 x 0.28 = 2.8 ms
- with a communication EF of the type SEND_REQ = (10x0.28) +0.75 = 3.55 ms

Overhead system time (Ost) = 1ms

Input and output management time for implicit I/O %I and %Q:

Module product references	Module type	Number of modules	Input management time (IN)	Output management time (OUT)
TSX DEY 16D2	16 channel discrete inputs	7	189 micro seconds	-
TSX DEY 16 FK	16 channel discrete inputs (fast inputs)	1	37 micro seconds	22 micro seconds
TSX DSY 16T2	16 channel discrete outputs	5	165 micro seconds	100 micro seconds
TSX AEY 1600	Analog inputs	2 (32 channels)	672 micro seconds	-
TSX ASY 410	Analog outputs	4 (16 channels)	236 micro seconds	236 micro seconds
TSX CTY 2A	Counting	1 (2 channels)	110 micro seconds	40 micro seconds
Total management time			1409 micro seconds	398 micro seconds

Input management time: Imt%I = 60 microseconds +1409 microseconds = 1469 microseconds = 1.47 ms.

Output management time: Omt%Q = 60 microseconds +398 microseconds = 458 microseconds = 0.46 ms.

Communication system time:

- Sending a request: scomT = 1.5 ms,
- Receiving the reply: rcomT = 1.5 ms.

Cycle time without execution of the communication OF

TcyM = Apcet + Most + Imt%I + Omt%Q

= 2.8 ms +1 ms +1.47 ms + 0.46 ms = 5.73 ms

Cycle time with execution of the communication OF and sending of the request

TcyM = Apcet + Most + Imt%I + max [request send time (scomT), Omt%Q]

= 3.55 ms + 1 ms + 1.47 ms + max [1.5 ms; 0.46 ms] = 7.52 ms

Cycle time with reception of reply

TcyM = Apcet + Most + max [response send time (scomT), Tge%I] + Omt%Q

= 2.8 ms + 1 ms + max [1.5 ms; 1.47 ms] + 0.46 ms = 5.76 ms

FAST Task Cycle Time

Definition

FAST cycle time = Program processing time (Ppt) + input and output internal processing time (Ipt).

Definition of Ppt Program Processing Time

Ppt = Application code execution time relative to the FAST (Apcet).

Application code execution time: see *Definition of Ppt Program Processing Time, page 183*.

Definition of Input and Output Internal Processing Time (Ipt)

Ipt = FAST task overhead system time (FosT) + input and output management time for implicit I/O %I and %Q.

FAST task overhead system time (FosT)

Processors	FAST task overhead system time
TSX P57 0244/104/1634/154	0.30 ms
TSX P57 204/254/2634 TSX PCI 57 204	0.30 ms 0.30 ms
TSX P57 304/354/3634 TSX PCI 57 354	0.35 ms 0.35 ms
TSX P57 454/4634 TSX H57 24M/44M	0.08 ms 0.07 ms
TSX P57 554/ 5634/6634	0.07 ms

Input and output management time for implicit I/O %I and %Q: see *Management Time on Input/Output of Implicit I/O %I and %Q, page 185*.

Event Response Time

General Points

Definition: time between an edge on an event input and the corresponding edge on an output positioned by the program in the event task.

Example: program with 100 Boolean instructions and TSX DSY 32TK2 input module

Processors	Minimum	Typical	Maximum
TSX P57 0244/104/1634/154	1.9 ms	2.8 ms	5.0 ms
TSX P57 204/254/2634 TSX PCI 57 204	1.9 ms	2.4 ms	4.2 ms
TSX P57 304/354/3634 TSX PCI 57 354	1.8 ms	2.2 ms	3.7 ms
TSX P57 454/4634 TSX H57 24M/44M	1.6 ms	2.0 ms	3.7 ms
TSX P57 554/5634/6634	1.4 ms	1.6 ms	3.7 ms

Part III
Atrium processors

In This Chapter

The aim of this section is to describe the Atrium processors and their implementation.

What Is in This Part?

This part contains the following chapters:

Chapter	Chapter Name	Page
28	Atrium processors: introduction	193
29	Atrium processors: installation	205
30	Atrium processors: Diagnostics	231
31	TSX PCI 57 204 processor	241
32	TSX PCI 57 354 Processor	243
33	Atrium processors: general characteristics	245

Chapter 28
Atrium processors: introduction

Subject of this Chapter

The aim of this chapter is to provide an overview of Atrium processors.

What Is in This Chapter?

This chapter contains the following topics:

Topic	Page
General introduction	194
Physical Description of Atrium Processors	195
Real-time clock	197
Dimensions of Atrium processor cards	198
The different standard elements constituting an Atrium card	200
The different optional elements constituting an Atrium card	201
Catalog of Atrium Processors	204

General introduction

At a Glance

Integrated into a host PC operating under Windows 2000 or Windows XP with a 32-bit PCI bus, Atrium processors manage, using programming software, a complete PLC station made up of racks, discrete Input/Output modules, analog Input/Output modules and application modules, which can be distributed over one or more racks connected to an X-Bus.

NOTE: The Atrium processor communicates with the PC in which it is installed via the PCI bus. For this, the **PCIWAY 2000 or XP** communications drive must be installed.

Illustration

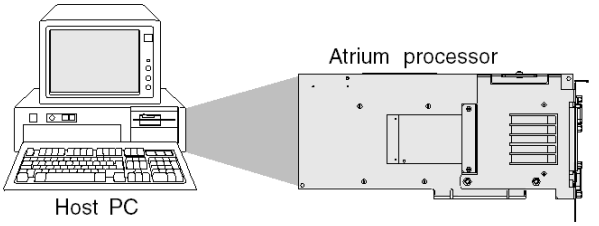

Two types of processor are available to meet your different requirements:

- **TSX PCI 204 processor:** processors with specifications and performance identical to the TSX P57 204 processor,
- **TSX PCI 354 processor:** a processor with specifications and performance identical to the TSX 57 354 processor.

Characteristics of the Host PC

To support an Atrium processor, the host PC must:

- Operate under Windows 2000 or Windows XP,
- Be equipped with a 32-bit 33 MHz PCI bus(1),
- Have two or three (2) slots available on the PCI bus (consecutive and in steps of 20.32mm + 7mm) of sufficient height and length.
  The shape of the TSX PCI 57 processor card exactly matching the shape of a 32-bit PCI PC card,
- Meet PCI standards (signals, power supply, etc.).

NOTE: The term "host PC" means a Schneider Group industrial PC or any other commercially available PC that has the characteristics defined above.
(1) The operating frequency of the PCI bus must be greater than 25 MHz.
(2) 3 slots in the case of the addition of an optional 24 V power supply.

Physical Description of Atrium Processors

Illustration

Different components of a TSX PCI 57 processor module

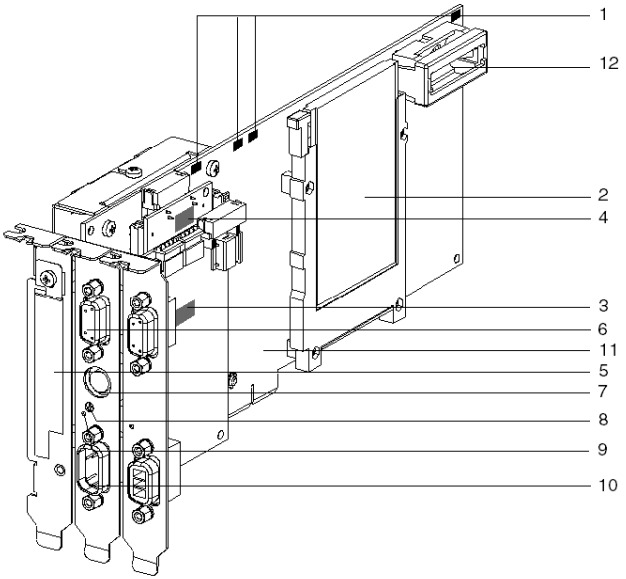

Illustration

This table describes the components of a processor module:

Number	Function
1	RUN, TER, BAT, I/O and FIP indicator LEDs (the FIP LED is only present on the TSX PCI 57 354 model).
2	Slot for a type 1 PCMCIA memory extension card.
3	Micro-switches for coding the rack address on the X Bus.
4	Micro-switches for coding the module's position on the rack.
5	Slot for a PCMCIA type 3 communication card.
6	Female 9-pin SUB-D connector used to remote the X Bus to an extendable rack.
7	Terminal port (**TER** connector (8-pin mini-DIN)): this is used to connect an FTX type or PC compatible terminal, or to connect the PLC to the Uni-Telway bus through the TSX P ACC 01 insulation unit. This connector is used to supply 5V to the peripheral which is linked to it (limited by the available current provided by the PC's power supply).
8	Recessed **RESET** button which when pressed causes a cold startup. ● **Processor working normally:** cold startup in STOP or RUN mode, according to the procedure defined in the configuration, ● **Processor error:** forced startup in STOP mode. **The RESET button must be pressed using a non-conductive object.**
9	ERR LED.
10	Male 9-pin SUB-D connector for linking up to a master Fipio bus. This connector is only present on the TSX PCI 57 354 processor.
11	32-bit PCI connector, used for linking up to the host PC.
12	Slot accommodating a battery for backing up the processor's internal RAM memory.

NOTE: The **TER** terminal port offers master Uni-Telway communication mode by default, and can be configured for slave Uni-Telway or ASCII character mode.

Real-time clock

At a Glance

Atrium processors have a real-time clock.

See *Real-time clock, page 85* in the **TSX P57/TSX H57 Premium processor** section.

Dimensions of Atrium processor cards

TSX PCI 57 Atrium Processor

The following diagrams show the dimensions, in millimeters, of Atrium processor cards.

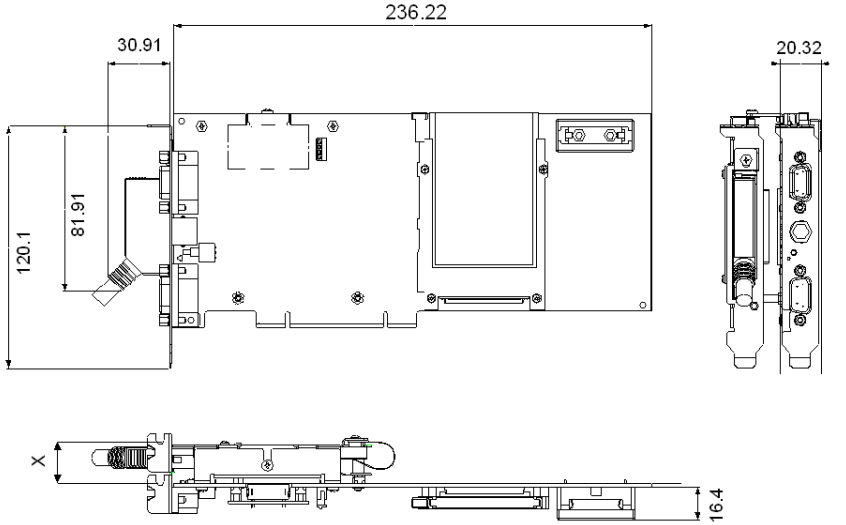

X = interval of between 20.32 and 27.32 mm

NOTE: A TSX PCI 57 processor uses two slots on the PCI bus of the PC. These slots must be adjacent and set at an interval of between 20.32mm and 27.32 mm apart.

Atrium Processor with Optional 24V Power Supply

The following diagrams show the dimensions, in millimeters, of Atrium processor cards.

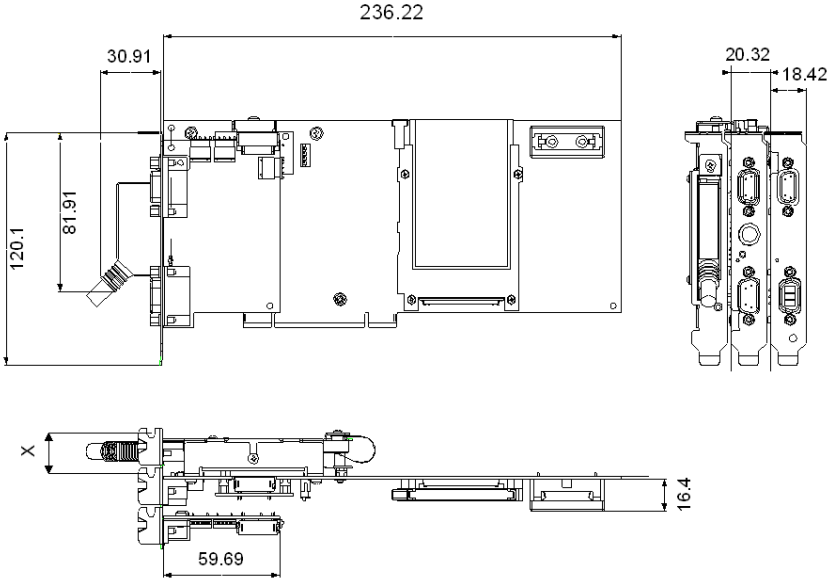

X = interval of between 20.32 and 27.32 mm

NOTE: A TSX PCI 57 processor with an optional 24V power supply uses three slots on the PCI bus of the PC. These slots must be adjacent and set at an interval of between 20.32mm and 27.32 mm apart.

NOTE: If the processor is powered by an optional power supply card, then the processor is not switched off when the PC is switched off, but when the optional power supply card is switched off.

The different standard elements constituting an Atrium card

Illustration

This diagram shows you the different standard elements constituting an Atrium processor card.

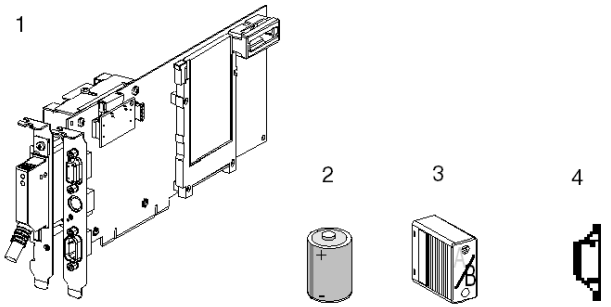

Table of elements and descriptions

The following table indicates the names and descriptions of the different elements constituting a TSX PCI 57 processor card:

Number	Element	Description
1	Atrium processor card	It is associated with a mechanical subassembly for accepting a type 3 communication PCMCIA card.
2	Battery	It ensures that the RAM memory of the processor is saved. It is to be installed in the slot provided for this purpose on the processor card.
3	Line termination	TSX TLYEX /B *(see page 396)* type line termination.
4	Removable cover	A removable cover for the type 3 communication PCMCIA card, specific to the Atrium processor. The mechanical fitting of a communication card on the Atrium processor requires the use of this cover (see mounting and maintenance instructions delivered with each communication card).

The different optional elements constituting an Atrium card

Optional elements

The following 2 elements are optional:

- A TSX PCI ACC1 shield. This accessory is to be used for integrating the Atrium processor within an X-Bus cable segment.
- A 24 V power supply, TSX PSI 2010. This card is connected to the Atrium processor card and ensures the power supply to the processor when the PC is switched off. It also enables the Atrium processor to be fitted within an X-Bus cable segment.

TSX PCI ACC1 shield

This diagram presents the different elements that constitute the TSX PCI ACC1:

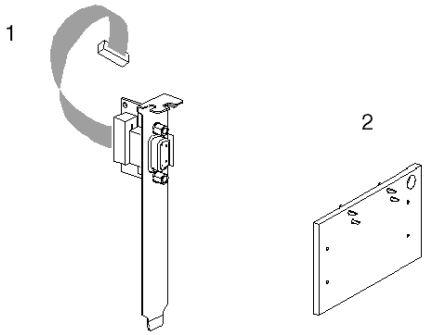

Table of elements and descriptions

The following table indicates the names and descriptions of the different elements constituting a TSX PCI ACC1:

Number	Element	Description
1	Shield	Shield fitted with a SUB-D 9 pin connector for connecting a TSX CBY..OK *(see page 392)* X-Bus extension cable and a cable for connection to the processor. This accessory is to be used for integrating the processor within an X-Bus cable segment.
2	Daughterboard	Two types of daughterboards: ● one which provides the interface between the shield below and the processor card, this accessory is to be used with the shield below. It is fitted instead of and in the place of the line termination A/ integrated in the base of the processor. ● one which allows connection to an IBY module

NOTE: In addition, the elements specified below are supplied with the Atrium card:
- disks containing the PCIWAY drivers and the OFS software product,
- a service instruction concerning the installation of the Atrium processor.

TSX PSI 2010 24V power supply

This diagram presents the different elements that constitute the TSX PSI 2010:

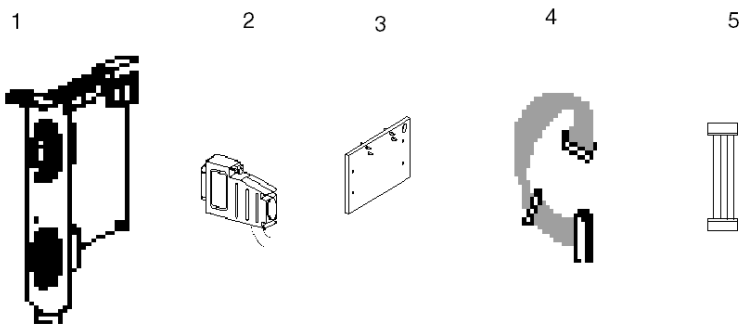

Table of elements and descriptions

The following table indicates the names and descriptions of the different elements constituting a TSX PSI 2010:

Number	Element	Description
1	24V power supply card	A power supply card equipped with: a SUB-D 9 pin connector for connecting a TSX CBY ••0K X-Bus extension cable and a male connector for the external 24 V power supply.
2	Female connector	A female connector for connection to the 24 V external power supply.
3	Line termination	A daughterboard that ensures the interface between the power supply card and the Atrium processor card. It is fitted instead of and in the place of the line termination A/ integrated in the base of the processor.
4	X-Bus cable	An X-Bus cable for connecting the daughterboard to the X-Bus connector of the power supply card.
5	Power supply cable	A power supply cable for connecting the power supply card to the power supply of the Atrium processor card.

Catalog of Atrium Processors

Catalog

The following table describes the main (maximum) characteristics of the TSX PCI 57 204 and TSX PCI 57 354 processors.

Reference		TSX PCI 57 204	TSX PCI 57 354
Number of racks	TSX RKY 12 EX	8	8
	TSX RKY 4EX/6EX/8EX	16	16
Number of module slots	With TSX RKY 12 EX	87	87
	With TSX RKY 4EX/6EX/8EX	111	111
Number of channels	Discrete I/Os	1024	1024
	Analog I/Os	80	128
	Expert (counting, axis, etc.)	24	32
Number of connections	Network (Fipway, ETHWAY/TCP_IP, Modbus Plus)	1	3
	Master Fipio, number of devices	-	127
	Field bus (InterBus-S, Profibus)	1	3
	ASi sensor/actuator	4	8
Memory size	Internal	160K8	224K8
	Extended	768K8	1792K8

Chapter 29
Atrium processors: installation

Subject of this Chapter

This chapter deals with the installation of **Atrium** processors and the **PCMCIA** extension card.

What Is in This Chapter?

This chapter contains the following topics:

Topic	Page
Precautions to be taken during installation	206
Physical installation of the Atrium processor in the PC	207
Logical installation of the Atrium processor on the X-Bus	208
Operations to be carried out before installation	211
How to configure the Atrium processor's address on the X-Bus	212
How to configure the processor's standard I/O address on the PCI bus	213
How to install the Atrium processor card in the PC	214
Installing the 24 V power supply card	216
Integration of the Atrium processor within an X-Bus cable segment	219
How to install/remove the memory extension card on the Atrium processor	222
Memory cards for Atrium processors	224
How to install/remove communication cards on the Atrium processor	225
Processing on insertion/extraction of a PCMCIA memory card on an Atrium PLC	228
Precautions to be taken when replacing an Atrium processor	229

Precautions to be taken during installation

General

You are advised to limit charges of static electricity, which can cause significant damage to electronic circuits. To do this the following rules should be observed:

⚠ CAUTION

ELECTROSTATIC DISCHARGE

- hold the card by the edges. Do not touch the connectors or any of the circuits that are visible,
- do not take the card out of its protective anti-static packaging before you are ready to install it in the PC,
- ground yourself during handling, if possible,
- do not put the card on a metal surface,
- avoid unnecessary movements, as static electricity is generated by clothing, carpets and furniture.

Failure to follow these instructions can result in injury or equipment damage.

Physical installation of the Atrium processor in the PC

TSX PCI 57 Atrium Processor

The TSX PCI 57 processor physically occupies two or three consecutive slots (with optional 24 V power supply) 1, 2 and 3 on the PCI Bus, but only uses slot 1 electrically. Slots 2 and 3 are used by the PCMCIA communication card and by the 24 V power supply.

Principle diagram:

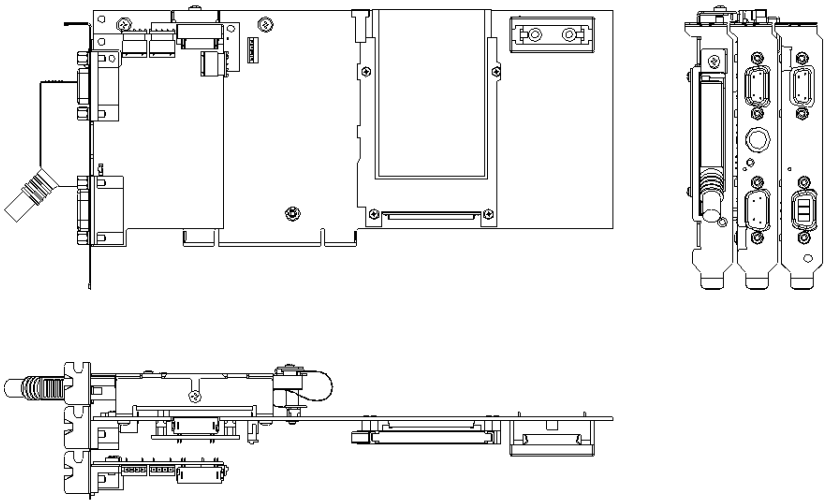

Logical installation of the Atrium processor on the X-Bus

Logical installation on the X-Bus

The Atrium processor logically occupies the same slot as a TSX P57/TSX H57 processor (rack with address 0, position 00 or 01).

The TSX RKY EX rack with address 0 must have a power supply module and the position which is normally taken up by a TSX P57/TSX H57 processor will be unoccupied (virtual slot for the Atrium processor).

As Premium PLCs have two types of power supply (standard and double format), the unoccupied position on the rack with address 0 will be depend upon the type of power supply used.

NOTE:

- The slot corresponding to the Atrium processor address (physically free on the rack) must not be used by another module.
- The X-Bus address must be configured using the micro-switches on the processor card, so that the Atrium processor is aware of its address on the X-Bus.

Using a standard format power supply module

In this case, the installation rule for the rack with address 0 is as follows:

- the power supply module automatically occupies position PS,
- position 00, the virtual slot for the processor, must be unoccupied,
- the other modules are installed starting at position 01.

The following diagram shows the module installation rule when a single format power supply module is used.

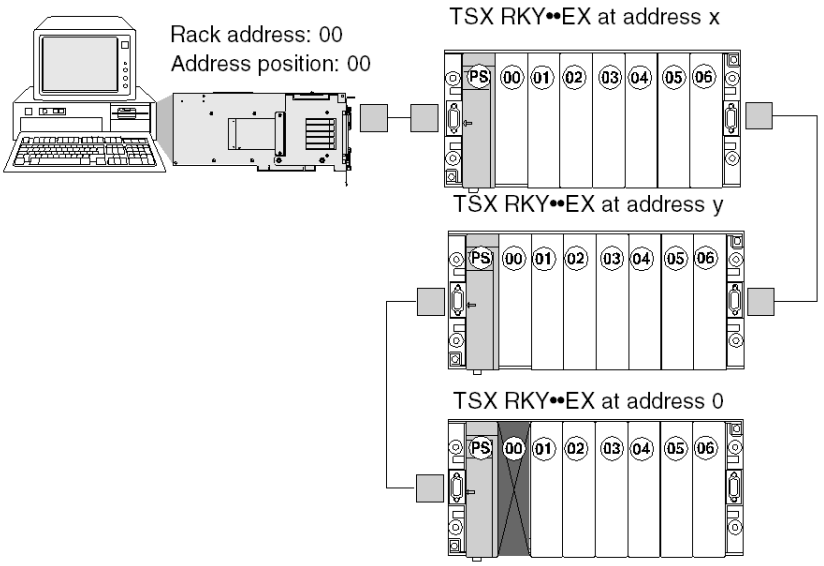

Using a double format power supply module

In this case, the installation rule for the rack with address 0 is as follows:

- the power supply module automatically occupies positions PS and 00,
- position 01, the virtual slot for the processor, must be unoccupied,
- the other modules are installed starting from position 02.

The following diagram shows the module installation rule when a single format power supply module is used.

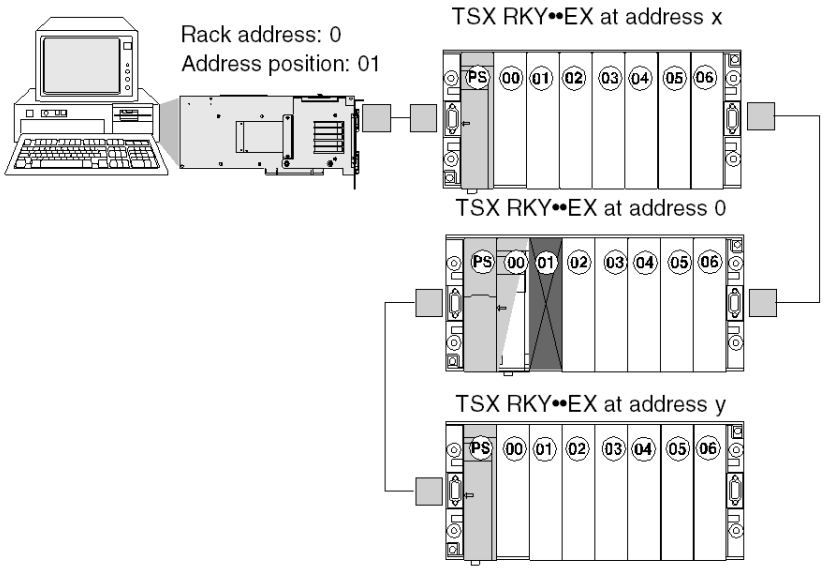

Operations to be carried out before installation

General

Certain operations must be performed before a processor card is installed in the PC:

- if necessary, insert the battery into the slot provided *(see page 234)*,
- if necessary, insert the PCMCIA memory card *(see page 222)*,
- configure the address of the processor on the X-Bus *(see page 212)*,
- configure the processor's standard I/O address on the PCI Bus *(see page 213)*.

How to configure the Atrium processor's address on the X-Bus

General

This address must be the same as the one which will be configured in the configuration screen of the programming software. This configuration is carried out using micro-switches found on the processor card.

Rack address: the processor’s virtual slot is always situated on the rack with address 0.

Processor position: the virtual position of the processor will depend upon the type of power supply installed on the rack:

- single format power supply: virtual position of processor = 00,
- double format power supply: virtual position of processor = 01.

Default configuration:

- rack address = 0,
- module position = 00.

Illustration

Explanatory diagram:

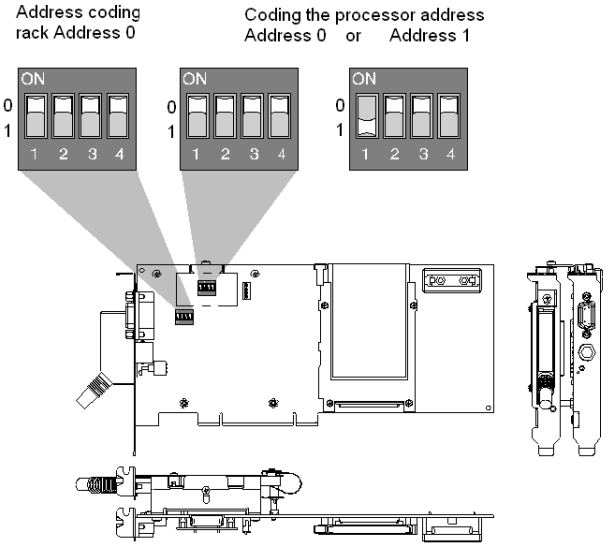

How to configure the processor's standard I/O address on the PCI bus

TSX PCI 57 processor on PCI bus

No particular operation is required on the part of the user. The processor is Plug&Play, and it is the PC's operating system that sets the I/O address and the interrupt number (IRQ)

How to install the Atrium processor card in the PC

Preliminary conditions

Preliminary addressing operations *(see page 211)* must be performed.

⚠ DANGER

ELECTRIC SHOCK

When installing the processor in the PC, the PC must always be switched off.

Failure to follow these instructions will result in death or serious injury.

Procedure

The following table describes the procedure for installing the processor card in the PC:

Step	Action
1	With the PC disconnected from the mains, remove the PC cover to find two or three adjacent PCI slots (if the Atrium card is equipped with an optional 24 V power supply). As an installation constraint, the PC must conform to the following standard: 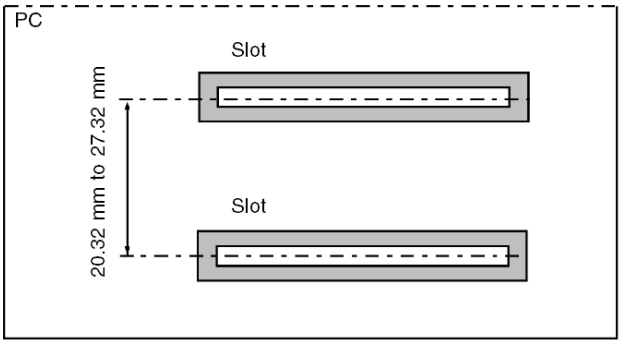
2	Remove the protective covers and fixing screws already in place which correspond to the available slots.
3	Loosen the screw (1) in order to separate the mother and daughter cards, thus enabling you to adjust the space between the 2 cards. Top view of the Atrium 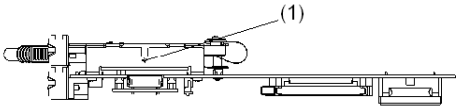 card
4	Install the card in the free slots provided, adjusting the space between the two cards.

Step	Action
5	Fix the card to the PC by tightening the fixing screws you removed previously (step 2).
6	Re-tighten the screw (1) (see step 3).
7	Place the casing back on the computer and replace all the cables and accessories which had to be switched off: ● X-Bus cable and /B line terminator TSX TLYEX **Caution:** The processor switches to a system error, if the line terminator /B is not installed: ❍ on the TSX PCI 57 processor, if this is not linked to a rack by a TSX CBY **..** X-Bus cable. . In this case, a /B line terminator must be installed on the processor's X-Bus output. ❍ on the available connector of the last rack of the station, if the processor is linked to a rack by a TSX CBY **..** X-Bus cable. . In this case, a /B line terminator must be installed. This device is used to show that the X-Bus has not been adapted. ● Fipio Bus cable and PCMCIA communication card, if necessary. **Caution:** Before inserting the PCMCIA card, loosen the mechanical locking screw on the upper part of the PCMCIA card slot. After installing the PCMCIA card, set up the mechanical lock and tighten the screw.
8	Switch the PC on and start installing the various software packages: ● PCIWAY driver corresponding to the OS installed: WINDOWS 2000 or Windows XP (see the service instructions provided with the processor), ● OFS data server if used, ● programming software.

Installing the 24 V power supply card

General

This card can be used in 2 different ways:

- As a single 24V DC power supply
- As a 24 V power supply as well as providing integration of the Atrium processor within an X-Bus cable segment

⚠ DANGER

ELECTRIC SHOCK

To install these accessories the Atrium processor card, and so the PC, must be disconnected from the mains power supply.

Failure to follow these instructions will result in death or serious injury.

Installing only the 24 V power supply

Carry out the following steps:

Step	Action	Illustration
1	As the processor card is fitted in the PC, fit the power supply card in the slot available for this as indicated in the illustration opposite and connect the connection ribbon cable to the J4 connector of the processor card.	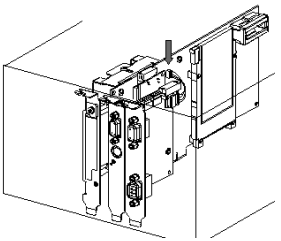
2	Connect the female connector to the external power supply by cable while respecting the pinouts shown opposite. Connect the 3 wires of the power supply cable taking care to respect the polarities.	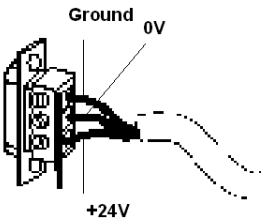

Step	Action	Illustration
3	Mount the connector in its cover, secure the cable to it (see diagram opposite) and close the cover by pressing down firmly.	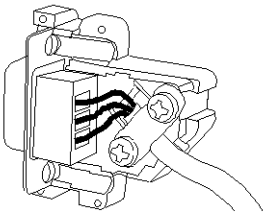
4	Connect the power supply cable to the power supply connection of the card	

Installation and fitting within an X-Bus cable segment

Carry out the following steps:

Step	Action	Illustration
1	Remove the line terminator A/ located on the processor.	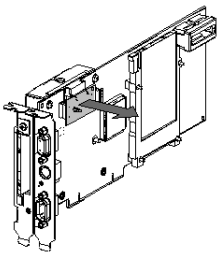
2	Install the daughterboard instead of the line terminator A/.	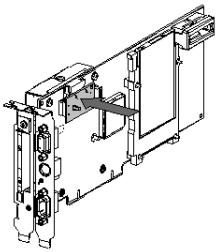
3	As the processor card is fitted in the PC, fit the power supply card in the slot available for this as indicated in the illustration opposite and connect the connection ribbon cable to the J4 connector of the processor card.	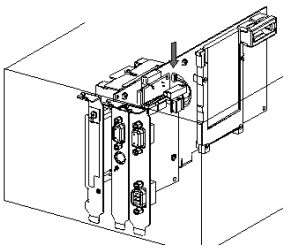

Step	Action	Illustration
4	Connect the cable to the connector of the daughterboard installed in step 2. The cable is equipped with 3 connectors. The middle connector must be connected if a TSX IBX 100 card is used. **1.** without a TSX IBX 100 card 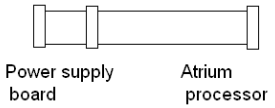 **2.** with a TSX IBX 100 card 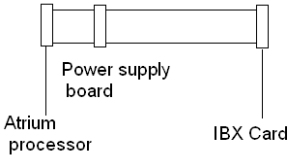 	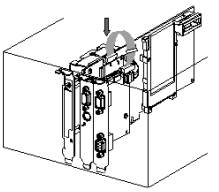
5	Carry out steps 2 , 3 and 4 as described in the installation procedure for a 24 V power supply only.	

Example of topology

See: Fitting the Atrium processor within an X-Bus cable segment. *(see page 221)*

Integration of the Atrium processor within an X-Bus cable segment

General

As standard, the Atrium processor is equipped for fitting at the start of the X-Bus, and so the line termination A/ is built into it.

If you wish to integrate the processor within an X Bus cable segment, two optional TSX PCI ACC1 accessories make it possible to do so:

- **a shield fitted with:**
  - SUB-D 9 pin connector to connect a **TSX CBY•** X-Bus cable,
  - a cable for connecting the SUB-D 9 pin connector to the processor card,
- **a daughterboard** fitted with two connectors that act as an interface between the processor card and the SUB-D 9-pin connector of the shield described above. This daughterboard is fitted instead of and in place of the line termination A/, fitted as standard on the processor card.

Note: The optional TSX PSI 2010 24 V power supply also enables you to perform this function.

Illustration

Shield and daughterboard:

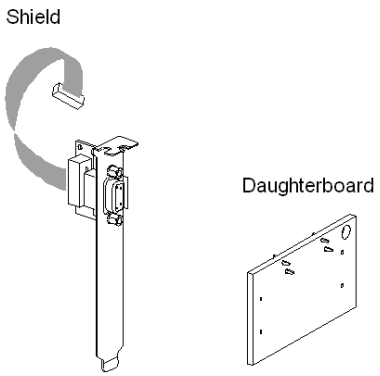

Installation procedure

Carry out the following steps:

Step	Action	Illustration
1	Remove the line termination A/ located on the processor.	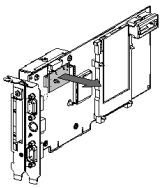
2	Install the daughterboard instead of the line termination A/.	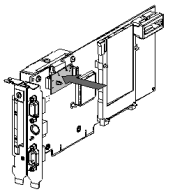
3	As the processor card is in position in the PC, fix the shield in the available slot, located immediately on the right of the processor card as indicated on the figure above.	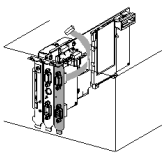
4	Connect the cable to the connector of the daughterboard installed in step 2.	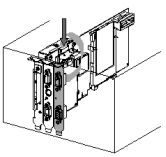

Example of topology

Illustration of an example topology of an Atrium station with the processor integrated within an X-Bus cable segment

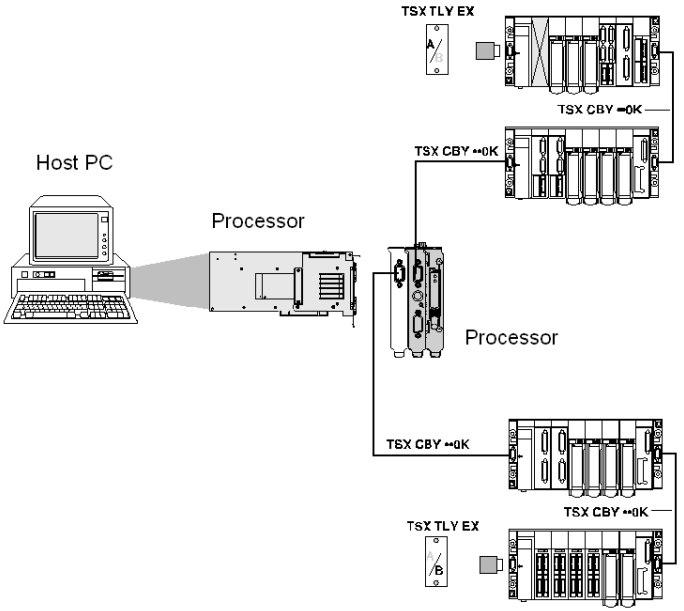

NOTE: In this case, since the processor is no longer integrated at the start of the line terminations **TSX TLY EX A/** and **/B** must be installed on each of the racks located at the end of the line.

How to install/remove the memory extension card on the Atrium processor

Principle

Carry out the following steps to install the memory card into the Atrium processor:

Step	Action
1	Place the PCMCIA card in its allocated slot.
2	Slide it in until it can go no further. **Note**: If the card is not inserted the right way around, it will greatly protrude from the cover. To check the card has been positioned the right way around, check its upper edge meets the limit of the cover and that it is properly attached in its connector.
3	Position the card in the PC with the power turned off.

⚠ CAUTION

MEMORY CARD DESTRUCTION

The memory extension card must be installed on the processor card with the power switched off and before the latter is installed in the PC.

Failure to follow these instructions can result in injury or equipment damage.

Illustration

Explanatory diagram:

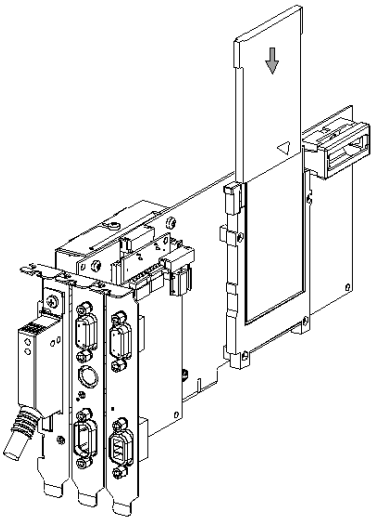

NOTE: If the program in the PCMCIA memory cartridge contains the **RUN AUTO** option, the processor will automatically restart in RUN mode after the cartridge is inserted and the PC is turned on.

Memory cards for Atrium processors

General

See *Standard Memory Cards for PLCs, page 101* and *Application\File and File Storage Type Memory Cards, page 104*.

How to install/remove communication cards on the Atrium processor

Principle

Carry out the following steps to install the communication card into the Atrium processor.

Step	Action	Description
1	Unscrew the screw in order to release the clip.	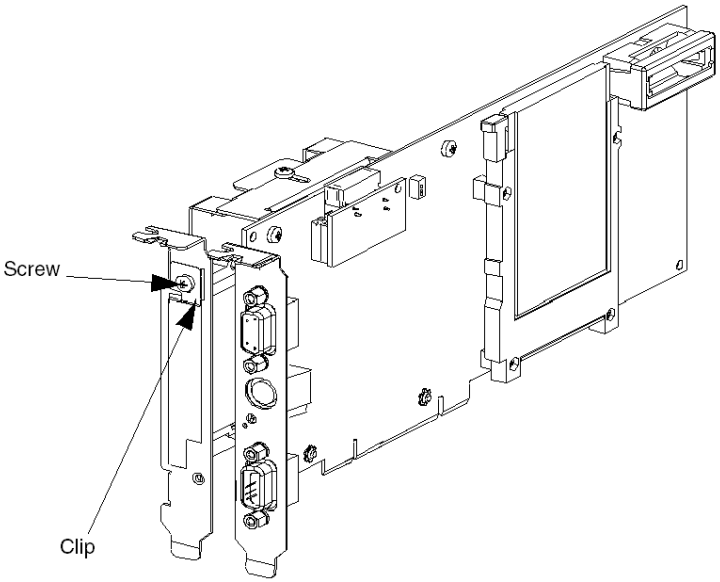

Step	Action	Description
2	Slide up the clip in order to permit the PCMCIA card to be inserted in the slot. **Note**: Be careful to choose the cover without wings for the PCMCIA card; the other covers prevent the card to be inserted.	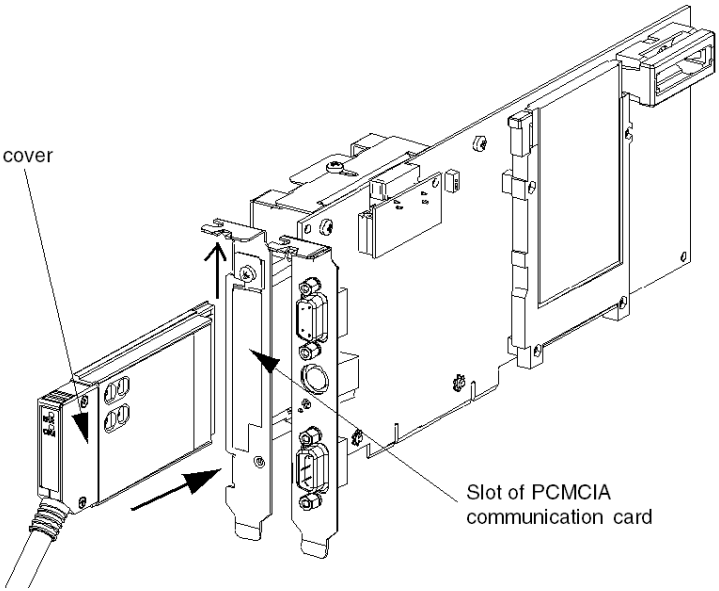

Step	Action	Description
3	Slide down the clip in order to block the PCMCIA card and fix it with the screw.	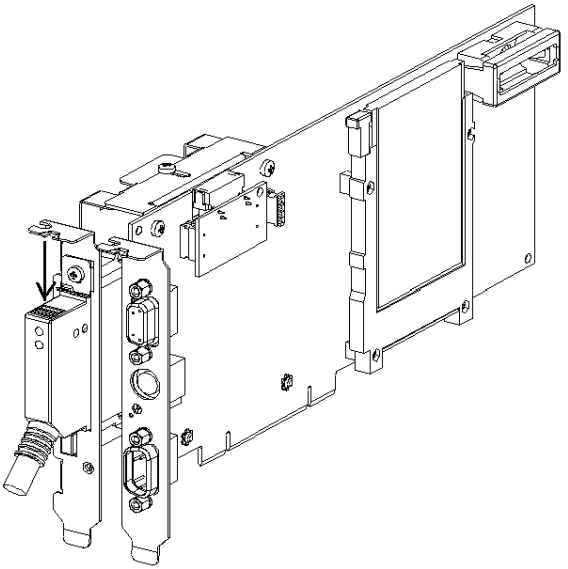

⚠ CAUTION

COMMUNICATION CARD DESTRUCTION

The communication cards must be installed on the processor card with the power switched off and before the latter is installed in the PC.

Failure to follow these instructions can result in injury or equipment damage.

Processing on insertion/extraction of a PCMCIA memory card on an Atrium PLC

General

⚠ WARNING

UNEXPECTED EQUIPMENT OPERATION

Do not insert or extract the PCMCIA memory card on an Atrium processor whilst switched on. These operations, though not destructive for the processor or any other device, cause the processor to behave unpredictably.

Failure to follow these instructions can result in death, serious injury, or equipment damage.

⚠ WARNING

UNEXPECTED BEHAVIOUR OF APPLICATION

Ensure that the right user application is contained in the memory card before inserting it into the PLC.

If the program contained in the PCMCIA memory card includes the RUN AUTO option, the processor will automatically restart in RUN mode after the card is inserted and the PC is switched on.

Failure to follow these instructions can result in death, serious injury, or equipment damage.

Precautions to be taken when replacing an Atrium processor

Important

⚠ WARNING

UNEXPECTED EQUIPMENT OPERATION

If the Atrium processor is being replaced by another processor which is not blank (the processor has already been programmed and contains an application), the power for all the PLC station's control units must be switched off.

Before restoring power to the control units, check that the processor contains the required application.

Failure to follow these instructions can result in death, serious injury, or equipment damage.

Chapter 30
Atrium processors: Diagnostics

Subject of this Chapter

This chapter deals with diagnostics for Atrium processors.

What Is in This Chapter?

This chapter contains the following topics:

Topic	Page
Description of Atrium Processor LEDs	232
Changing the Atrium RAM memory backup battery	234
What happens after you press the processor RESET button	237
How the Atrium processor behaves after an action on the PC	238
Finding errors via the processor status LEDs	239

Description of Atrium Processor LEDs

Labeling of the LEDs

Six LEDs (RUN, TER, BAT, I/O, FIP and ERR) found on the processor card enable fast diagnostics of the status of the PLC station.

LEDs on the TSX PCI 57 card:

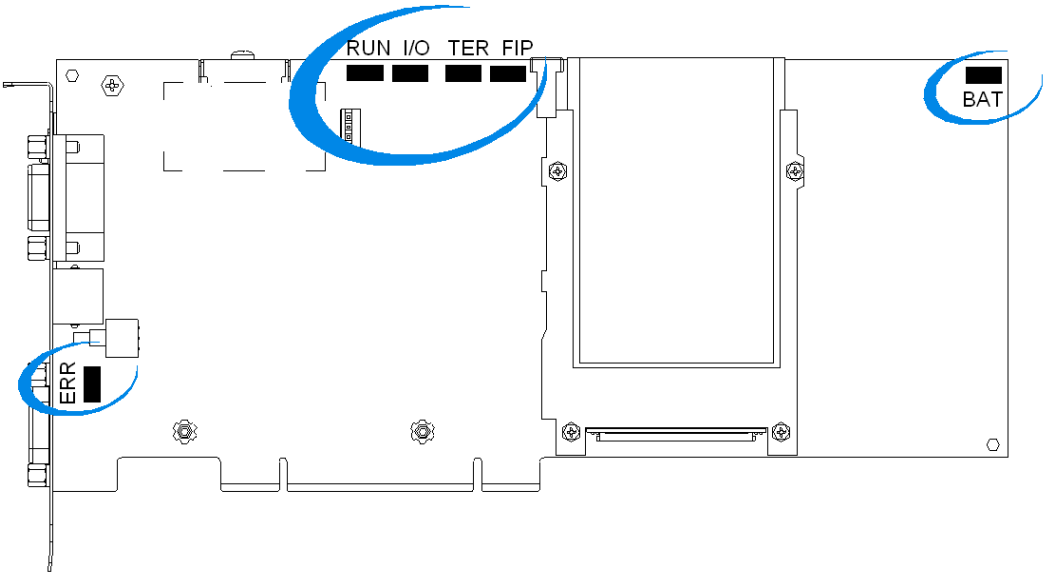

Due to the small amount of space available on the shield, only the ERR LED is visible when the PC housing the processor is closed.

For better user-friendliness, the state of the RUN, I/O, ERR and FIP LEDs is displayed via a utility in the task bar in Windows 2000 or Windows XP on the PC with the processor card. This functionality is only available when the host PC is running (PCIWAY driver installed)

Description

The following table describes the role of each LED:

Display LED	On ●	Flashing ⊗	Off ○
BAT (red)	● battery missing, ● battery flat, ● battery the wrong way round, ● wrong type of battery.	-	Running normally.
RUN (green)	PLC running normally, program executing.	PLC in STOP mode or blocked by software error.	● PLC not configured: application missing, invalid or incompatible, ● PLC error: processor or system error.
TER (yellow)	-	Terminal port link active. The rate of flashing is relative to the amount of traffic.	Link not active.
I/O (red)	Input/Output errors coming from a module, a channel or a configuration error.	X-Bus error.	Normal state, no internal error.
FIP (yellow)	-	Fipio bus link active. The rate of flashing is relative to the amount of traffic.	Link not active.
ERR (red)	Processor or system error.	● PLC not configured (application missing, invalid or incompatible), ● PLC blocked by a software error, ● Memory card battery error, ● X-Bus error.	Normal state, no internal error.

NOTE:
- An X-Bus error is indicated by simultaneous flashing of the ERR and I/O LEDs.
- The FIP LED is only present on the TSX PCI 57 354 processor.

Changing the Atrium RAM memory backup battery

At a Glance

This battery on the Atrium processor module ensures that the processor internal RAM memory and the real-time clock are saved in the event of a power outage. It is delivered in the same packaging as the processor and must be installed by the user.

NOTE: With an Atrium processor, there is no point in putting a battery into the rack power supply which usually houses the processor (rack with address 0).

Installing the battery for the first time

To install the battery, carry out the following:

Step	Action
1	Remove the cover by squeezing the sides.
2	Put the battery in its slot taking care to observe polarities.
3	Replace the cover which keeps the battery in its slot.

Changing the battery

The battery can be changed every year as a preventative measure or when the **BAT** LED is lit. However the LED is not visible when the PC is closed, but you have a %S8 system bit which can be used by the application program to generate an alarm to warn that the battery needs changing.

To change the battery, carry out the following:

Step	Action
1	Switch the PC off.
2	Disconnect the different cables linked to the processor.
3	Open the PC.
4	Take the card out of its slot.
5	Remove the cover.
6	Remove the defective battery from its slot.
7	Put in the new battery, observing the polarities.
8	Replace the cover.
9	Put the card back in its slot, close the PC, connect external components and switch on.

⚠ CAUTION

LOSS OF RAM DATA

Changing the battery should not exceed the stated limit for the PC being switched off. Exceeding this limit may cause data in RAM memory to be lost.

Failure to follow these instructions can result in injury or equipment damage.

Illustration

Installing the battery on the TSX PCI 57:

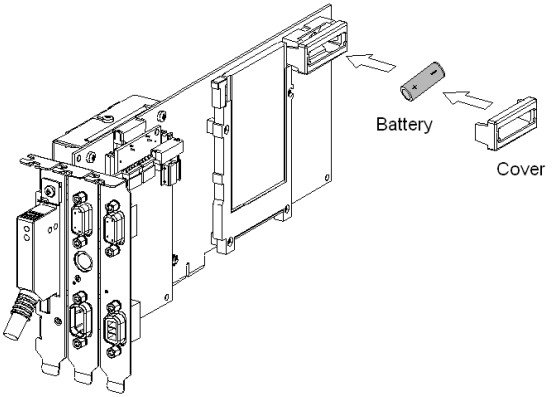

How often must the battery be changed?

Period of battery backup

The length of time during which the battery ensures backup of the processor's internal RAM memory and the real-time clock depends on two factors:

- the percentage of time for which the PLC is switched off and as a result the battery is being used,
- the ambient temperature when the PLC is switched off.

Summary table:

Ambient temperature when inoperative		≤ 30°C	40°C	50°C	60°C
Backup time	PLC off for 12 hours per day	5 years	3 years	2 years	1 year
	PLC off for 1 hour per day	5 years	5 years	4.5 years	4 years

Independent saving by the processor

The processors have their own offline independent save function to save the processor internal RAM memory and the real-time clock, which allows the removal of:

- the Atrium processor battery.

The backup time depends on the ambient temperature.

Assuming that the processor was switched on previously, the guaranteed time varies in the following way:

Ambient temperature when switching off	20°C	30°C	40°C	50°C
Backup time	2h	45mn	20mn	8mn

What happens after you press the processor RESET button

General

All processors have a RESET button on their front panel, which when pressed, causes a PLC cold start, in RUN or in STOP mode (1), in the application contained on the memory card (or in internal RAM).

RESET following a processor fault

As soon as a processor fault appears, the alarm relay on rack 0 (2) is deactivated (open contact) and the module outputs switch to fallback position or are maintained in the current state depending on the selection made at configuration. Pressing the RESET button causes the PLC, forced into STOP mode, to cold start.

(1) Start in RUN or in STOP mode is defined at configuration.

(2) With the processor, this relay is not controlled.

NOTE: When the RESET button is pressed, and during the PLC cold start, the terminal link is deactivated.

How the Atrium processor behaves after an action on the PC

General

The following table describes the different actions on the PC and what implications they have for the Atrium processor:

Action on the PC	Behavior of the Atrium processor
Accidental disconnection from the mains and reboot of the PC containing the Atrium	warm restart if the application environment has not changed (1).
Micro-outages on the network supplying the PC	As the Atrium processor does not have a filtering mechanism for micro-outages, every micro-outage not filtered by the PC's internal power supply causes a warm restart of the processor, if the application environment has not changed (1).
Restart software control: Restart	This action has no effect on the operating status of the Atrium processor (if the processor is in RUN mode, it remains in RUN etc.). It triggers neither the warm start nor the cold start of the processor.
Shut down software control: Shut down	The Atrium processor carries out a warm restart if the application context has not changed when the PC starts up. **Note:** if the 24 V power supply is present and connected, this control has no effect on the operating status of the Atrium processor (the PCI connection is lost however)

(1) if the optional 24 V power supply is present and connected to the mains, the disconnection of the PC from the mains does not effect the operating of the Atrium processor.

NOTE: A PC software blockage has no effect on the current state of the processor (identical behavior to a PC software RESET).

Finding errors via the processor status LEDs

General

See:

- *Finding errors using processor state LEDs, page 136*,
- *Non blocking errors, page 137*,
- *Blocking errors, page 139*,
- *Processor or system errors, page 140*.

Chapter 31
TSX PCI 57 204 processor

General characteristics of the TSX PCI 57 204 processors

TSX PCI 57 204 processor

The following table gives the general characteristics of the TSX PCI 57 204 processors.

Characteristics			TSX PCI 57 204
Maximum configuration	Maximum number of TSX RKY 12EX racks		8
	Maximum number of TSX RKY 4EX/6EX/8EX racks		16
	Maximum number of slots		111
Functions	Maximum number of channels	In-rack discrete I/O	1024
		In-rack analog I/O	80
		Application	24
	Maximum number of connections	Built-in Uni-Telway (terminal port)	1
		Network (ETHWAY, Fipway, Modbus Plus)	2
		Master Fipio (built-in)	-
		Third party field bus	1
		AS-i field bus	4
	Process control channels		10
	Process control loops		30
	Savable real-time clock		yes
Memory	Savable internal RAM		160K8
	PCMCIA memory card (maximum capacity)		768K8
Application structure	Master task		1
	Fast task		1
	Event processing (1 has priority)		64
Application code execution speed:	Internal RAM	100% Boolean	4.76 Kins/ms (1)
		65% Boolean + 35% digital	3.57 Kins/ms (1)
	PCMCIA card	100% Boolean	3.70 Kins/ms (1)
		65% Boolean + 35% digital	2.50 Kins/ms (1)

Characteristics		TSX PCI 57 204
Execution time	Basic Boolean instruction	0.19/0.21 µs (2)
	Basic digital instruction	0.25/0.42 µs (2)
	Floating point instruction	1.75/3.0 µs
System overhead	Master task	1 ms
	Fast task	0.30 ms

(1) Kins: 1024 instructions (list)

(2) The first value corresponds to the execution time when the application is in the processor's internal RAM, the second value corresponds to the execution time when the application is in a PCMCIA card.

Chapter 32
TSX PCI 57 354 Processor

General Characteristics of the TSX PCI 57 354 Processor

TSX PCI 57 354 Processor

The following table gives the general characteristics of the TSX PCI 57 354 processor.

Characteristics			TSX PCI 57 354
Maximum configuration	Maximum number of TSX RKY 12EX racks		8
	Maximum number of TSX RKY 4EX/6EX/8EX racks		16
	Maximum number of slots		111
Functions	Maximum number of channels	In-rack discrete I/O	1024
		In-rack analog I/O	128
		Application	32
	Maximum number of connections	Built-in Uni-Telway (terminal port)	1
		Network (ETHWAY, Fipway, Modbus Plus)	3
		Fipio master (built-in), number of devices	127
		Third party field bus	3
		AS-i field bus	8
	Process control channels		15
	Process control loop		45
	Savable real-time clock		yes
Memory	Savable internal RAM		224K8
	PCMCIA memory card (maximum capacity)		1792K8
Application structure	Master task		1
	Fast task		1
	Event processing (1 has priority)		64
Application code execution speed	Internal RAM	100% Boolean	6.67 Kins/ms (1)
		65% Boolean + 35% digital	4.76 Kins/ms (1)
	PCMCIA card	100% Boolean	4.55 Kins/ms (1)
		65% Boolean + 35% digital	3.13 Kins/ms (1)

Characteristics		TSX PCI 57 354
Execution time	Basic Boolean instruction	0.12/0.17 µs (2)
	Basic digital instruction	0.17/0.33 µs (2)
	Floating point instruction	1.75/3.30 µs (2)
System overhead	Master task	1 ms
	Fast task	0.35 ms

(1) Kins: 1024 instructions (list)

(2) The first value corresponds to the execution time when the application is in the processor's internal RAM, the second value corresponds to the execution time when the application is in a PCMCIA card.

Chapter 33
Atrium processors: general characteristics

Aim of this Chapter

This chapter introduces the characteristics of the devices used during the installation of an Atrium station.

What Is in This Chapter?

This chapter contains the following topics:

Topic	Page
Features of Atrium Processors	246
Electrical Characteristics of the Atrium Processors and the Devices Which Can Be Connected and Integrated.	247
Defining and counting application-specific channels	250
Processor performance	251

Features of Atrium Processors

Specifications

An Atrium processor comprises:

- a general-usage processor,
- a processor dedicated to command control.

The following table gives the general characteristics of the various processors:

Processor	Main processor	Main processor frequency (MHz)	Automation Processor	Automation processor frequency (MHz)
TPC X57 0244	INTEL or AMD 486	48	SONIX	48
TSX PCI57 204	INTEL or AMD 486	72	SONIX	48
TPC X57 204	INTEL or AMD 486	72	SONIX	48
TSX PCI57 354	INTEL or AMD 486	72	SONIX	48

Electrical Characteristics of the Atrium Processors and the Devices Which Can Be Connected and Integrated.

General Points

As the processors can be fitted with certain devices which do not have their own power supply, the consumption of these devices must be taken into account when establishing a global breakdown of power consumption.

- Devices without their own power supply which can be connected to the terminal port:
  - Adjustment terminal: **T FTX 117 ADJUST**,
  - TSX P ACC01 unit for connecting to the Uni-Telway bus.
- Devices without their own power supply which can be built into the processor:
  - PCMCIA memory cards,
  - PCMCIA communication cards TSX FPP 10/20,
  - PCMCIA communication card TSX SCP 111/112/114,
  - PCMCIA communication card TSX MBP 100.

Special Characteristics of the Atrium Processors

The processors have their own 5VDC power supply, generated from the 12VDC power supply of the host PC. For this reason the 12 VDC power supply of the host PC must have sufficient power to accept an Atrium processor.

Power Supply (Processors + PCMCIA Cards)

This table shows the power consumption on the host PC's 12 VDC supply:

Processor + PCMCIA memory card	Typical consumption	Maximum consumption
TSX PCI 57 204	625 mA	1250 mA
TSX PCI 57 354	760 mA	1520 mA

Power Dissipation (PCMCIA Cards + Processors)

This table states the dissipated power for **Atrium** processors:

Processor + PCMCIA memory card	Typical consumption	Maximum consumption
TSX PCI 57 204	7.5W	15 W
TSX PCI 57 354	9.1W	18.3 W

Power Consumption of Devices Which Can Be Connected and Integrated in the Processor

Power consumption:

Consumption of the host PC's 12 VDC supply		Typical	Maximum
Devices without their own power supply which can be connected to the terminal port (TER)	TFTX 117 ADJUST	144 mA	157 mA
	TSXPACC01	69 mA	116 mA
PCMCIA communication card which can be integrated in the processor	TSXFPP10	153 mA	167 mA
	TSXFPP20	153 mA	167 mA
	TSXSCP111	65 mA	139 mA
	TSXSCP112	56 mA	139 mA
	TSXSCP114	69 mA	139 mA
	TSXMBP100	102 mA	144 mA

Power Dissipation of Devices Which Can Be Connected and Integrated in the Processors

Dissipated power:

Power dissipation		Typical	Maximum
Devices without their own power supply which can be connected to the terminal port (TER)	TFTX 117 ADJUST	1.7 W	1.9 W
	TSXPACC01	0.8 W	1.4 W
PCMCIA communication card which can be integrated in the processor	TSXFPP10	1.8 W	2.0 W
	TSXFPP20	1.8 W	2.0W
	TSXSCP111	0.8 W	1.7 W
	TSXSCP112	0.7 W	1.7 W
	TSXSCP114	0.8 W	1.7 W
	TSXMBP100	1.2 W	1.7 W

Characteristics of the Optional 24 V Card

Table of characteristics:

Characteristic			Value
Primary	Voltage	Nominal	24 VDC
		Limit (including ripple)	19.2...30 VDC (possible up to 36V)
	Current	Nominal input I rms	1.1 A at 24 VDC
	Initial power-up at 25°C	Inrush I	100 A at 24 VDC
		I2t on locking	3 A2s
		t on locking	0.04 As
	Brownout time	24V	7ms
	Built-in protection	By time-delay fuse	2A
Secondary	Power	Total useful typical	4 W
	15 VDC output	Nominal voltage:	15.5 V
Insulation	Dielectric resistance	Primary/secondary	Non-insulated, internal 0V connected to PC's earth
Compliance with Standards			IEC 1131-2

Defining and counting application-specific channels

Summary table

Applications:

Application		Module/card	Application-specific channels	Number
Counting		TSXCTY2A	Yes	2
		TSXCTY2C	Yes	2
		TSXCTY4A	Yes	4
Movement control		TSXCAY21	Yes	2
		TSXCAY41	Yes	4
		TSXCAY22	Yes	2
		TSXCAY42	Yes	4
		TSXCAY33	Yes	3
Step by step control		TSXCFY11	Yes	1
		TSXCFY21	Yes	2
Weighing		TSXISPY101	Yes	1
Communication Serial link		TSXSCP11. in the processor	No	0(*)
		TSXSCP11. in the TSXSCY21.	Yes	1
		TSXSCP11. in the TSXSCY21.	Yes	1
		TSXSCY 21 (built-in channel)	Yes	1
	Modem	TSXMDM10	Yes	1
	Fipio agent	TSXFPP10 in the processor	No	0(*)
	Master Fipio	Built into the processor	No	0(*)

(*) Although these channels are application-specific, they should not be taken into account when calculating the maximum number of application-specific channels which can be supported by the processor.

NOTE: Only channels configured from programming software can be counted.

Processor performance

General

See *Processor performance, page 181*:

Part IV
TSX PSY supply modules

Subject of this Part

This part describes TSX PSY **...** supply modules and their implementation.

What Is in This Part?

This part contains the following chapters:

Chapter	Chapter Name	Page
34	TSX PSY… supply modules: introduction	255
35	TSX PSY … supply modules: installation	263
36	TSX PSY … supply modules: diagnostics	281
37	TSX PSY … supply modules : auxiliary functions	287
38	TSX PSY power supply modules: breakdown of power consumption and power	293
39	TSX PSY 2600 power supply module	303
40	TSX PSY 5500 power supply module	305
41	TSX PSY 8500 power supply module	307
42	TSX PSY 1610 power supply module	309
43	TSX PSY 3610 power supply module	311
44	TSX PSY 5520 power supply module	313

Chapter 34
TSX PSY… supply modules: introduction

Aim of this Chapter

The aim of this Chapter is to introduce the TSX PSY**…** supply modules .

What Is in This Chapter?

This chapter contains the following topics:

Topic	Page
General introduction	256
Supply modules: description	258
Catalog of TSX PSY... supply modules	260

General introduction

At a Glance

TSX PSY… supply modules are designed to supply each **TSX RKY…** rack and its modules. The supply module is chosen according to the distribution network (direct or alternating current) and the power required (standard or double format model).

There are several types of supply modules:

- **supply modules for an alternating current network**,
- **supply modules for a direct current network**.

Auxiliary functions of supply modules

Each supply module has auxiliary functions:

- a display panel,
- an alarm relay,
- a slot for a battery for saving the data in the processor's RAM memory,
- a recessed button which, when pressed, simulates a power-supply outage, and launches a warm restart of the application,
- a 24 VDC sensor supply (only on models supplied from an alternating current network).

Supply modules for an alternating current network

The following table displays the types of supply module according to their format:

Standard format model	Double format model	
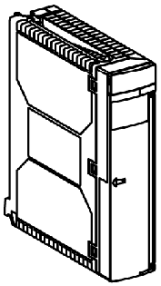 TSX PSY 2600 100...240 VCA	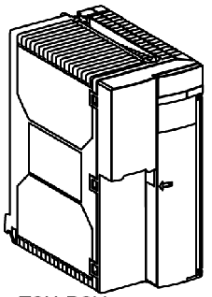 TSX PSY 5500 100...120 VCA	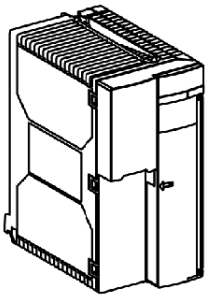 TSX PSY 8500 200...240 VCA

Supply modules for a direct current network

The following table displays the types of supply module according to their format:

Standard format model	Double format model	
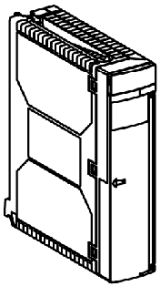 TSX PSY 1610 24 VCC non-insulated	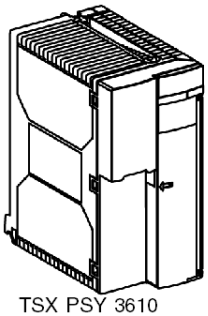 TSX PSY 3610 24 VCC non-insulated	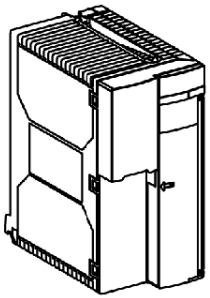 TSX PSY 5520 24...48 VCC insulated

Supply modules: description

At a Glance

The supply models take the form of:

- standard format modules, for TSX PSY 2600 and TSX PSY 1610 modules,
- double format modules for TSX PSY 5500/3610/5520/8500 modules.

Illustration

These illustrations label the different components of a standard supply module and a double format supply module:

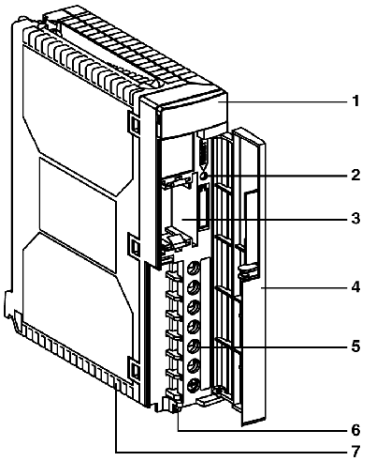

Standard format

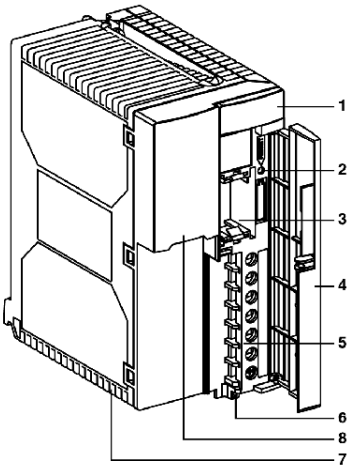

Double format

Description

This table describes the components of a supply module:

Number	Function
1	Display block containing: ● an **OK** LED (green), lit if the voltages are present and correct, ● a **BAT** LED (red), lit when the battery is worn out or missing, ● a 24V LED (green), lit when the voltage sensor is present. This LED is only present on alternating current supply modules TSX PSY 2600/5500/8500.
2	Recessed **RESET** button which, when pushed, triggers a warm restart of the application.
3	Slot for a battery which allows the processor's internal **RAM** memory to be saved.
4	Flap for protecting the front panel of the module.
5	Screw terminal block for linking up to: ● the supply network, ● the alarm relay contact, ● the sensor supply for alternating current supply modules TSX PSY 2600/5500/8500.
6	Hole for a cable-tightening clip to go through.
7	Fuse located under the module protecting: ● the 24VR voltage on the direct current supply module TSX PSY 3610, ● the primary voltage on the direct current supply module TSX PSY 1610, **Note:** on the TSX PSY 2600/5500/5520/8500 supply modules, the primary voltage protection fuse is inside the module and cannot be accessed.
8	110/220 voltage selector, only present on alternating current supply modules TSX PSY 5500/8500. On delivery, the selector is set to 220.

Catalog of TSX PSY... supply modules

Catalog of Supply Modules for AC Networks

The following table describes the main (maximum) characteristics of TSX PSY **...** 2600/5500/8500 supply modules.

Product references	TSX PSY 2600	TSX PSY 5500	TSX PSY 8500
	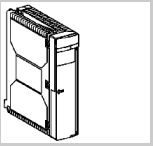	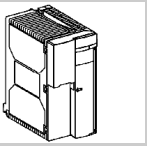	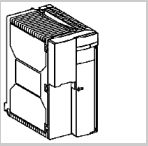
Input characteristics			
Nominal voltages	100...240 VCA	100...120 VCA / 200...240 VCA	100...120 VCA / 200...240 VCA
Thresholds	85...264 VCA	85...140 VCA / 190...264 VCA	85...140 VCA / 190...264 VCA
Frequency limit	47...63Hz	47...63Hz	47...63Hz
Accepted length of micro-power outages	less than or equal to 10 ms	less than or equal to 10 ms	less than or equal to 10 ms
Apparent power	50 VA	150 V AC	150 V AC
Nominal input current	0.5A to 100V 0.3A to 240V	1.7A to 100V 0.5A to 240V	1.7A to 100V 0.5A to 240V
Output characteristics			
Total power	26W	50W	80W
Output voltages	5V, 24 VR (1) 24 VS (2)	5V, 24 VR (1) 24 VS (2)	5V, 24 VS (2)
5V rated current	5A	7A	15A
24 VR rated current	0.6A	0.8A	not supplied
24 VS rated current	0.5A	0.8A	1.6A
Auxiliary functions			
Alarm relay	yes (1 contact closed, free from potential on terminal block)		
Display	yes, via LED on front panel		
Back-up battery	yes (status monitored via LED on front panel of module)		
Compliance with Standards	IEC 1131-2		

(1) 24V voltage used to supply the relays installed on the "relay outputs" modules.

(2) 24V voltage used to supply sensors.

Catalog of Supply Modules for DC Networks

The following table describes the main (maximum) characteristics of TSX PSY **...** 1610/3610/5520 supply modules.

Product references	TSX PSY 1610	TSX PSY 3610	TSX PSY 5520
	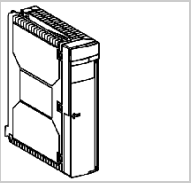	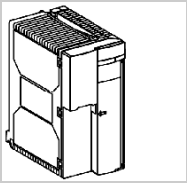	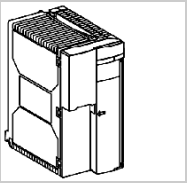
Input characteristics			
Nominal voltages	Non-isolated 24 VDC	Non-isolated 24 VDC	Isolated 24...48 VDC
Threshold values	19.2 to 30 VDC	19.2 to 30 VDC	19.2 to 60VDC
Accepted length of micro-power outages	less than or equal to 1 ms	less than or equal to 1 ms	less than or equal to 1 ms
Nominal input current	≤ 1.5A	≤ 2.7A	≤ 3A/24V 1.5A/48V
Output characteristics			
Total power	26W	50W	80W
Output voltages	5V, 24 VR (1)	5V, 24 VR (1)	5V, 24 VR (1)
5V rated current	5A	7A	7A
24 rated current	0.6A	0.8A	0.8A
Auxiliary functions			
Alarm relay	yes (1 contact closed, free from potential on terminal block)		
Display	yes, via LED on front panel		
Back-up battery	yes (status monitored via LED on front panel of module)		
Compliance with Standards	IEC 1131-2		

(1) 24V voltage used to supply the relays installed on the "relay outputs" modules.

Chapter 35
TSX PSY … supply modules: installation

Aim of this Chapter

This Chapter deals with the installation of TSX PSY … power supply modules.

What Is in This Chapter?

This chapter contains the following topics:

Topic	Page
Installation/mounting TSX PSY supply modules	264
Rules for connecting TSX PSY supply modules	265
Connecting alternating current power supply modules	267
Connecting direct current power supply modules from a floating 24 or 48 VDC direct current network	269
Connecting DC power supply modules from an AC network	271
Sensor and pre-actuator power supply servo control	275
Definition of protection devices at the start of a line	278

Installation/mounting TSX PSY supply modules

Mounting

Mounting of the TSX PSY power supply module is identical to the mounting of processor modules and, in general terms, the same as the mounting of other modules (see *How to mount processor modules, page 98*).

Installation

This table describes the principle for installing power supply modules:

Type of supply module	Description	Illustration
Standard format: TSX PSY 2600/1610	installed in the first slot in each TSX RKY rack and occupy the **PS** position.	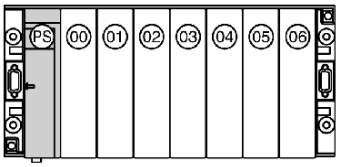
Double format: TSX PSY 3610/5500/5520/8500	installed in the first two slots in each TSX RKY rack and occupy the **PS** and **00** positions.	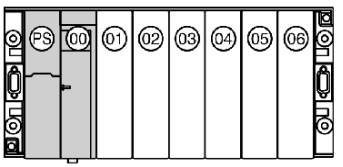

NOTE: Each supply module is provided with a locating device that only allows the module to be installed in the slot designated above.

NOTE: the TSX PSY 8500 supply module does not provide 24 VR voltage. Because of this, a rack fitted with this supply module will not be able to accommodate some modules, such as relay output and weighing modules

Rules for connecting TSX PSY supply modules

General points

The TSX PSY ••• power supply modules on each rack are equipped with a non-removable terminal block, provided with a cover, which is used to connect the power supply, the alarm relay, the protection ground and, for alternating current supplies, the supply of the 24 VDC sensors.

This screw terminal block is equipped with captive clamp screws which can connect a maximum of 2 wires with a cross-sectional area of 1.5 mm ^{2} (14 AWG) with wire end ferrules, or one wire with a cross-sectional area of 2.5 mm ^{2} (12 AWG) (maximum tightening torque on screw terminal: 0.8 N.m (0.6 lb-ft)).

The wires come out vertically towards the bottom. These wires can be kept in place with a cable-clip.

Illustration

This diagram shows the screw terminal block:

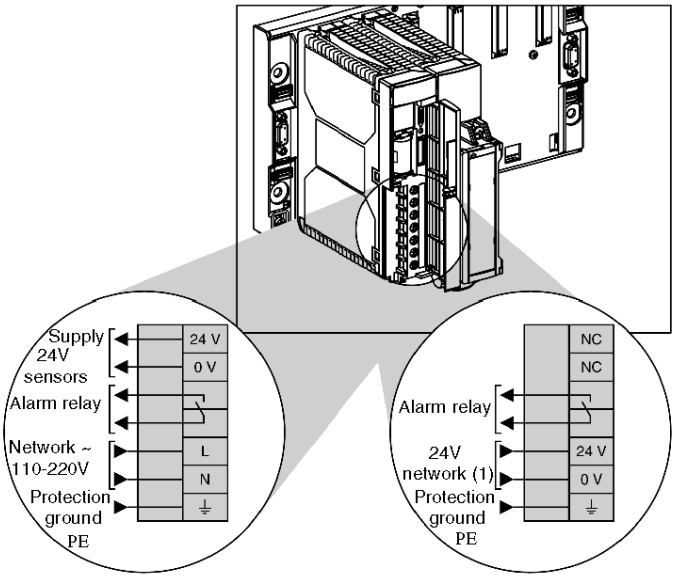

Alternating current supply
TSX PSY 2600/5500/8500

Direct current supply
TSX PSY 1610/3610/5520

(1) 24...48VAC for the TSX PSY 5520 supply module.

⚠ DANGER

ELECTRICK SHOCK - IMPROPER POWER SUPPLY VOLTAGE

For the power supply modules TSX PSY 5500/8500, position the voltage selector according to the voltage power used (110 or 220 VAC).

Failure to follow these instructions will result in death or serious injury.

Provide a protection device and switchgear upstream of the PLC station.

When selecting protection devices, the user should take into account the signaling currents which are defined in the characteristics tables for each supply module.

NOTE: As direct current supply modules TSX PSY 1610/2610/5520 have a strong signaling current, it is not advisable to use them on direct current networks which protect flood-back current limits.
When a power supply module is connected to a direct current network, it is mandatory to limit the length of the supply cable in order to help preventing transmission loss.

- TSX PSY 1610 supply module:
  - length limited to 30 meters (60 meters there and back) with copper wires and a 2.5 mm^2 (12 AWG) cross-section,
  - length limited to 20 meters (40 meters there and back) with copper wires and a 1.5 mm^2 (14 AWG) cross-section.
- TSX PSY 3610 and TSX PSY 5520 supply modules:
  - length limited to 15 meters (30 meters there and back) with copper wires and a 2.5 mm^2 (12 AWG) cross-section,
  - length limited to 10 meters (20 meters there and back) with copper wires and a 1.5 mm^2 (14 AWG) cross-section.

⚠ WARNING

DIRECT CURRENT POWER SUPPLY GROUNDING

The 0 V and physical ground are linked internally in the PLCs, in the network cabling accessories, and in some control consoles.

For applications which use a "floating" installation, measures need to be taken with connections. These depend on the method used for installation. In these cases, it is mandatory to use insulated direct current power supplies.

Failure to follow these instructions can result in death, serious injury, or equipment damage.

Connecting alternating current power supply modules

Connecting a single-rack PLC station

Illustration:

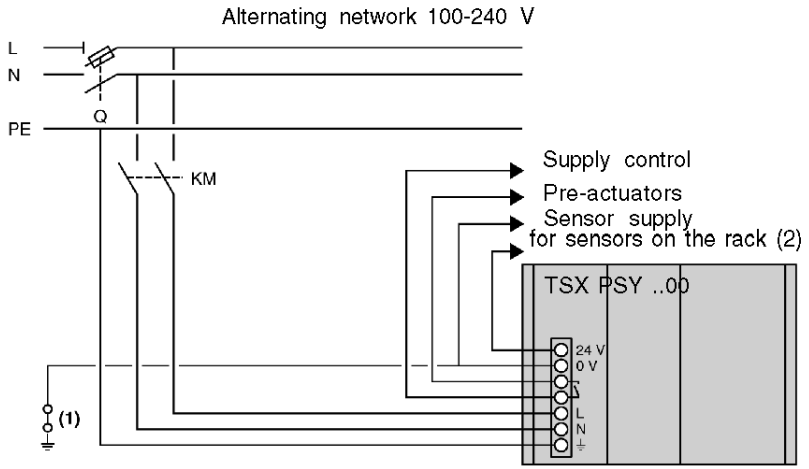

Q: general section switch,

KM: circuit contactor-breaker,

(1) insulating connector bar for finding grounding faults

(2) available current:

- 0.6 A with a TSX PSY 2600 *(see page 303)* power supply module,
- 0.8 A with a TSX PSY 5500 *(see page 305)* power supply module,
- 1.6 A with a TSX PSY 8500 *(see page 307)* power supply module,

NOTE: Protective fuses: alternating current power supply modules TSX PSY 2600/5500/8500 are fitted during manufacture with a protective fuse. This fuse, in series with the **L** input, is located inside the module and cannot be accessed.

Connecting a PLC station made up of several racks

Illustration:

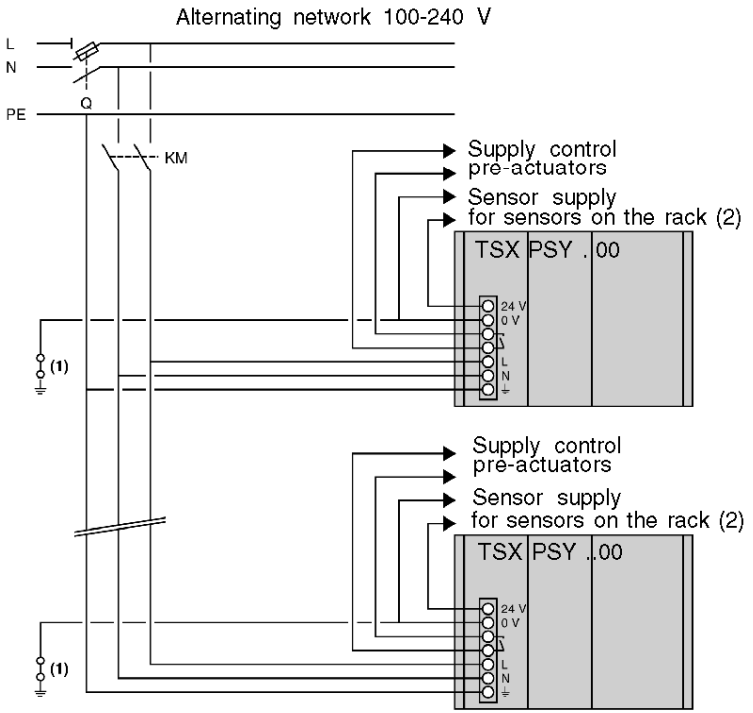

NOTE: If there are several PLC stations supplied by the same network, the principles of connection are identical.

Q: general section switch,

KM: circuit contactor-breaker,

(1) insulating connector bar for finding grounding faults

(2) available current:

- 0.6 A with a TSX PSY 2600 *(see page 303)* power supply module,
- 0.8 A with a TSX PSY 5500 *(see page 305)* power supply module,
- 1.6 A with a TSX PSY 8500 *(see page 307)* power supply module,

NOTE: Protective fuses: alternating current power supply modules TSX PSY 2600/5500/8500 are fitted during manufacture with a protective fuse. This fuse, in series with the **L** input, is located inside the module and cannot be accessed.

Connecting direct current power supply modules from a floating 24 or 48 VDC direct current network

Illustration

Diagram showing the principle:

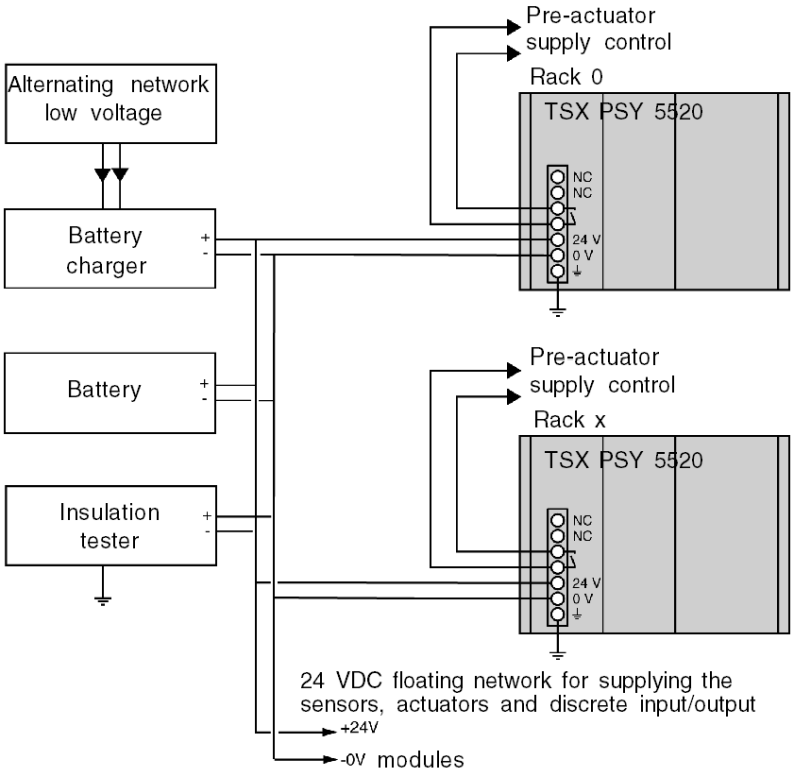

⚠ DANGER

ELECTRIC SHOCK - GROUNDING FOR FLOATING MOUNTING OR MARINEAPPLICATIONS

In the case of floating mounting (not linked to ground) used for specific applications and in particular in **Marine Applications**, an insulated **TSX PSY 5520 (24/48 VDC)** supply module must be selected.

Failure to follow these instructions will result in death or serious injury.

NOTE: A device can continually measure the level of insulation of the 24 VDC (or 48 VDC) in relation to the ground, and can give an alert when the level of insulation is abnormally low.
The input/output modules in the Premium range are insulated.

Connecting DC power supply modules from an AC network

Non-insulated power supply modules TSX PSY 1610/3610

Connecting a single-rack PLC station with a ground-referenced network:

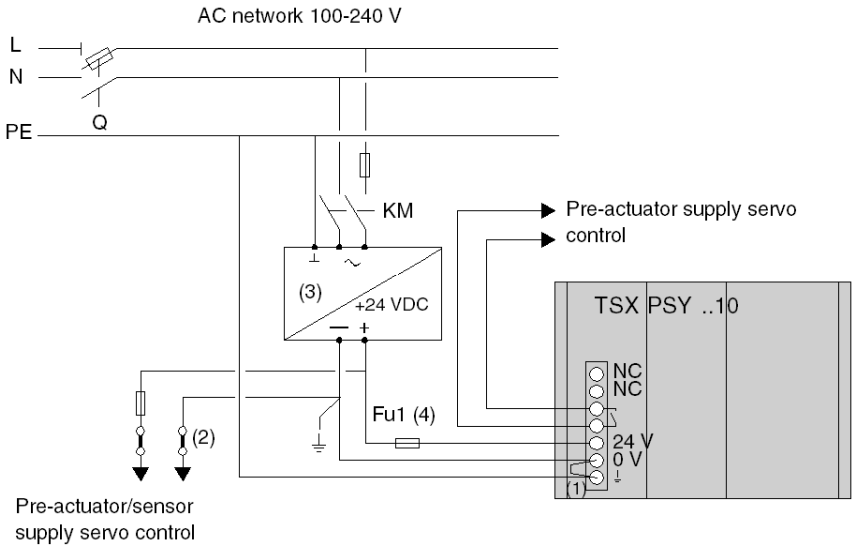

Q: general isolator,

KM: line contactor or circuit-breaker,

(1) : external shunt provided with the power supply module,

(2) : insulating connector bar for finding grounding faults. In this case, it is necessary to switch off the supply in order to disconnect the network from the ground,

(3) : optional use of a process power supply module *(see page 315)*,

(4) : protective fuse, (4 A, with time-delay) only necessary with the TSX PSY 3610 power supply module.

The TSX PSY 1610 power supply module is fitted during manufacture with a protective fuse located under the module and in series on the 24V input (3.5 A, 5x20 time-delay fuse).

Connecting a multi-rack PLC station with a ground-referenced network:

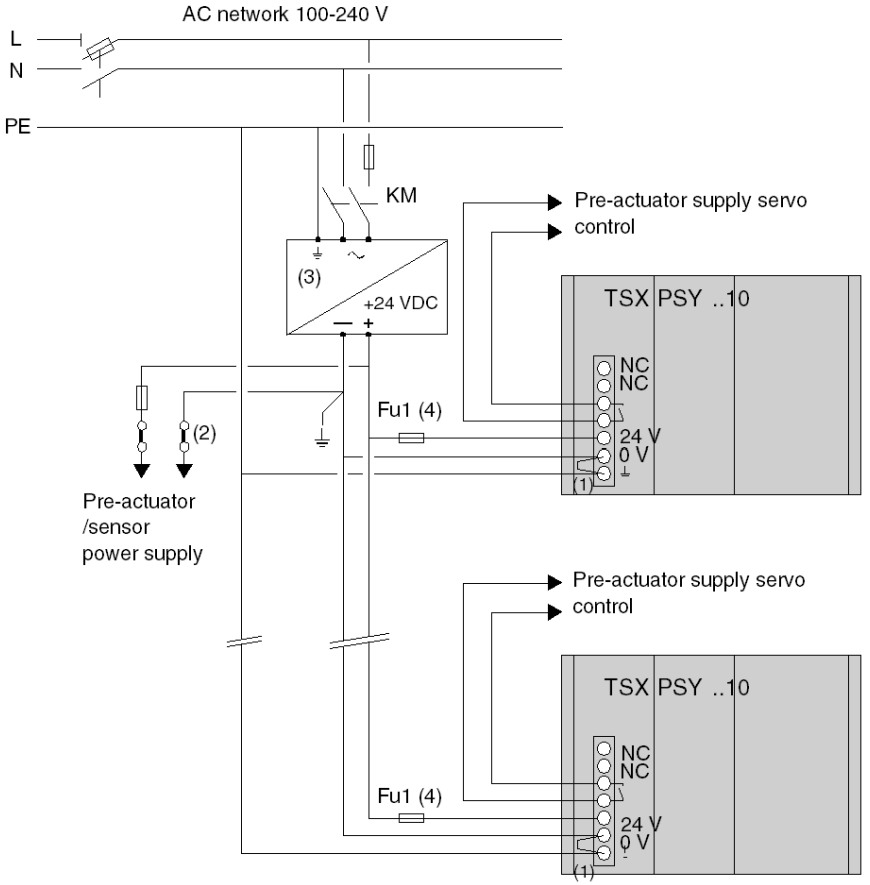

Q: general isolator,

KM: line contactor or circuit-breaker,

(1) : external shunt provided with the power supply module,

(2) : insulating connector bar for finding grounding faults. In this case, it is necessary to switch off the supply in order to disconnect the network from the ground,

(3) : optional use of a process power supply module,

(4) : protective fuse, (4 A, with time-delay) only necessary with the TSX PSY 3610 power supply module.

The TSX PSY 1610 power supply module is fitted during manufacture with a protective fuse located under the module and in series on the 24V input (3.5 A, 5x20 time-delay fuse).

NOTE: If there are several PLC stations supplied by the same network, the principles of connection are identical.

TSX PSY 5520 isolated power supply module

Connecting a single-rack PLC station with a ground-referenced network:

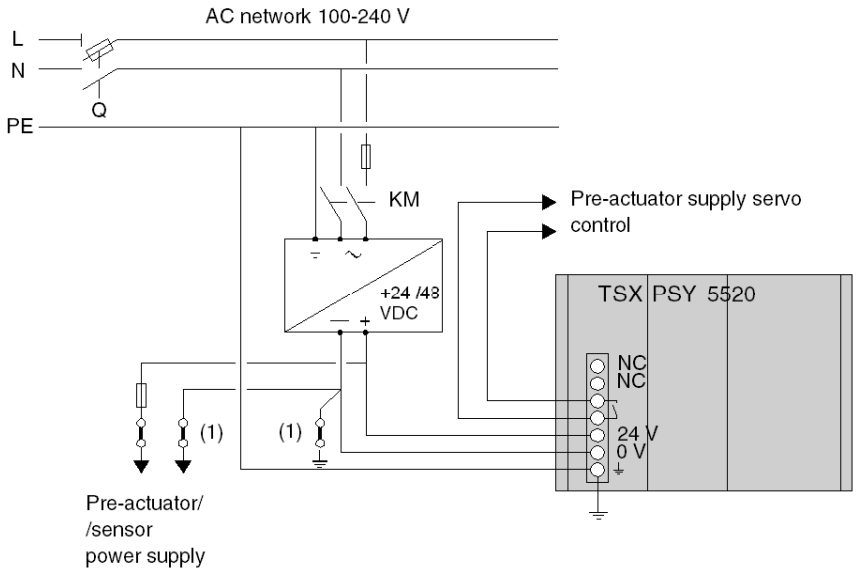

Q: general isolator,

KM: line contactor or circuit-breaker,

(1) : insulating connector bar for finding grounding faults,

(2) : optional use of a process power supply.

NOTE: Protective fuse: the TSX PSY 5520 power supply modules are fitted during manufacture with a protective fuse. This fuse, in series with the 24/48V input, is located inside the module and cannot be accessed.

Connecting a multi-rack PLC station with a ground-referenced network:

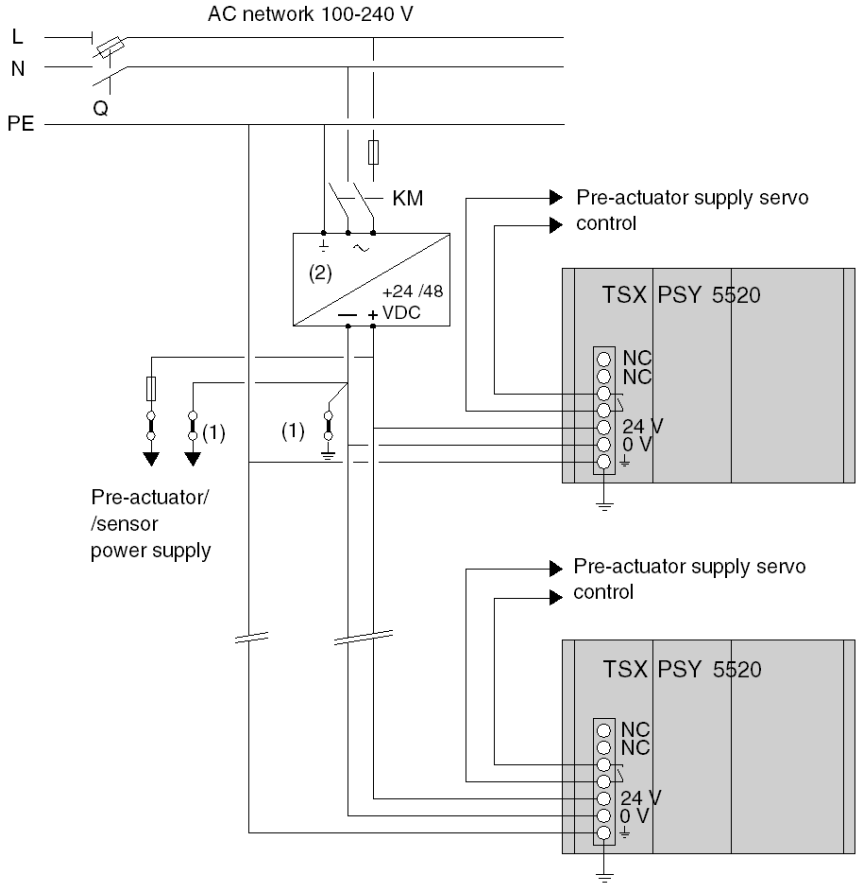

Q: general isolator,

KM: line contactor or circuit-breaker,

(1) : insulating connector bar for finding grounding faults,

(2) : optional use of a process power supply.

NOTE: Protective fuse: the TSX PSY 5520 power supply modules are fitted during manufacture with a protective fuse. This fuse, in series with the 24/48V input, is located inside the module and cannot be accessed.

NOTE: If there are several PLC stations supplied by the same network, the principles of connection are identical.

Sensor and pre-actuator power supply servo control

How to set up servo control

It is recommended that servo control of the different power supplies is set up in the following sequence:

Step	Action
1	Switch on the power supply to the PLC and the inputs (sensors), using the contactor KM (see diagram *(see page 271)*).
2	If the PLC is in RUN mode and running on AUTO, switch on the output power supply (pre-actuators), using the contactor KA. This is controlled by the alarm relay contact in each power supply.

Safety standards

Before restarting the installation following a stop (caused by a power outage or an emergency stop), safety standards require authorization to be given by the operator.

The MANU/AUTO switch makes it possible to force outputs from a terminal, when the PLC is in STOP mode.

Example 1

PLC station supplied by alternating current:

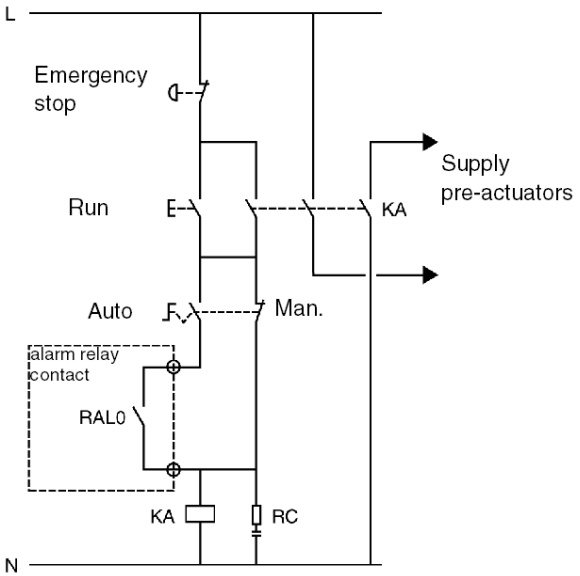

KA: contact controlled by alarm relay from supply module in AUTO run mode.

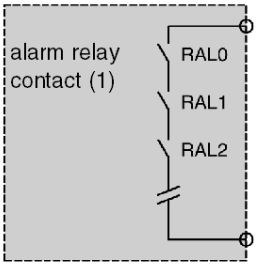

(1) When the PLC station is composed of several racks: set all the "alarm relay" contacts in series (RAL0, RAL1, RAL2, etc.).

Example 2

PLC station supplied by direct current:

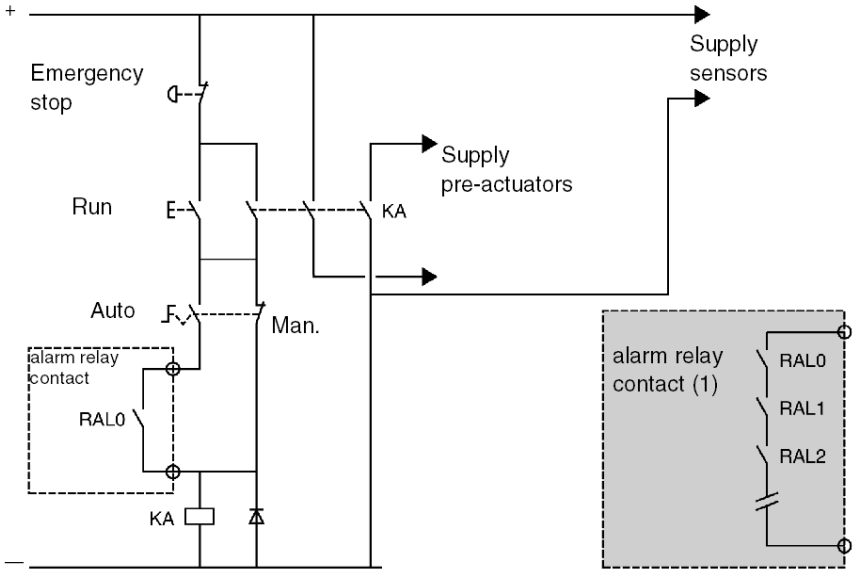

KA: contact controlled by alarm relay from supply module in AUTO run mode.

(1) When the PLC station is composed of several racks: set all the "alarm relay" contacts in series (RAL0, RAL1, RAL2, etc.).

Definition of protection devices at the start of a line

Introduction

You are advised to mount a protection device, such as circuit breaker or fuse, at the start of the line on the supply network.

The following information can be used to define the minimum amperage rating of the circuit breaker or fuse for a given power supply module.

Selecting a line circuit breaker

To select the amperage of the circuit breaker, the following three characteristics, which are given for each supply module, must be taken into account:

- the nominal input current: **I rms**,
- signaling current: **I**,
- the **It**.

The minimum amperage for the circuit breaker should be selected as follows:

- amperage of circuit breaker **IN > the supply I** rms,
- max. circuit breaker I > the supply signal **I**,
- circuit breaker It at point A on the curve > the supply**It**.

Illustration: characteristics provided by the circuit breaker manufacturer.

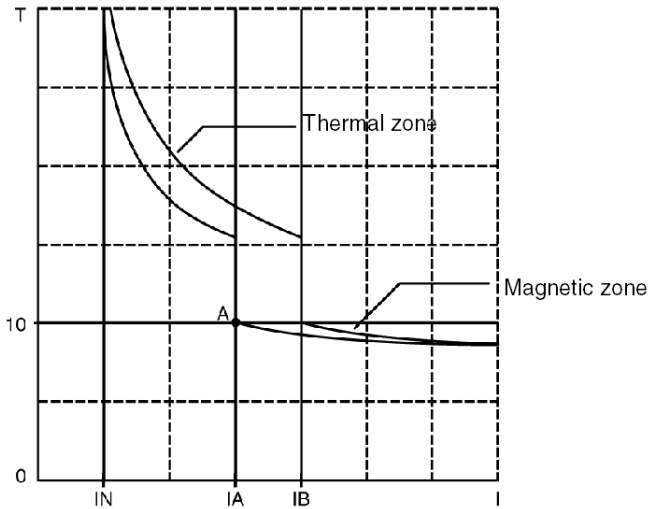

Selecting the line fuse

When selecting the amperage rating of the line fuse, the two following characteristics, which are given for each power supply, must be taken into account:

- the nominal input current: **I rms**,
- I^2t.

The minimum amperage rating for the fuse is selected as follows:

- fuse caliber **IN > 3 x the supply I rms**,
- I^2t of the fuse > 3 x I^2t of the power supply.

The characteristics of **I rms**, signal **I**, **It** and **I^2t** for each power supply module are:

TSX module		PSY 2600	PSY 5500	PSY 8500	PSY 1610	PSY 3610	PSY 5520
I rms	at 24VDC	-	-	-	1.5 A	2.7 A	3A
	at 48VDC	-	-	-	-	-	1.5 A
	at 100VAC	0.5 A	1.7 A	1.4 A	-	-	-
	at 24VAC	0.3 A	0.5 A	0.5 A	-	-	-
I signal(1)	at 24VDC	-	-	-	100 A	150 A	15 A
	at 48VDC	-	-	-	-	-	15 A
	at 100VAC	37 A	38 A	30 A	-	-	-
	at 24VAC	75 A	38 A	60 A	-	-	-
It	at 24VDC	-	-	-	0.1 As	0.3 As	0.25 As
	at 48VDC	-	-	-	-	-	15 As
	at 100VAC	0.034 As	0.11 As	0.15 As	-	-	-
	at 24VAC	0.067 As	0.11 As	0.15 As	-	-	-
I^2t	at 24VDC	-	-	-	6 A^2s	26 A^2s	2.2 A^2s
	at 48VDC	-	-	-	-	-	1.8 A^2s
	at 100VAC	0.63 A^2s	4 A^2s	15 A^2s	-	-	-
	at 24VAC	2.6 A^2s	2 A^2s	8 A^2s	-	-	-

(1) Values at initial power-up and at 25°C.

Chapter 36
TSX PSY … supply modules: diagnostics

Aim of this Chapter

This Chapter deals with the diagnostics of TSX PSY **…** supply modules .

What Is in This Chapter?

This chapter contains the following topics:

Topic	Page
Display on TSX PSY supply modules	282
Back-up battery on TSX PSY ... power supply modules	283
Power supply failure to rack other than rack 0	284
What happens after pressing the RESET button on a power supply module	285

Display on TSX PSY supply modules

Introduction

Each supply module has a display panel containing:

- three LEDs (OK, BAT, 24V) for the alternating current supply modules TSX PSY 2600/5500/8500,
- two LEDs (OK, BAT) for the direct current supply modules TSX PSY 1610/3610/5520.

Description

The following table describes the various LEDs and their functions:

Display LED	Description
OK LED (green)	• on when operating normally, • off when the output voltage is below the thresholds.
BAT LED (red)	• off when operating normally, • on if battery is missing, flat, the wrong way round or the wrong type.
24V LED (green)	• on when operating, • off if the sensor 24V voltage delivered by the supply is no longer present.
RESET push-button	Pressing this button activates a sequence of service signals identical to: • a power outage, when pressed, • powering up, when released. The application takes these actions (pressing and releasing) to mean a warm restart *(see page 189)*.

Sensor supply

The alternating current supply modules TSX PSY 2600/5500/8500 have a built-in power supply which delivers a voltage of 24VDC for supplying the sensors.

This sensor power supply can be accessed via the module’s screw connection terminal block.

⚠ CAUTION

UNEXPECTED EQUIPMENT OPERATION

Do not set the TSX PSY 2600/5500/8500 module in parallel with an external supply module.

Failure to follow these instructions can result in injury or equipment damage.

NOTE: The "24 VDC sensor supply module" output for the TSX PSY 8500 module is a VLSV-(very low safety voltage) type This ensures the user’s safety.

Back-up battery on TSX PSY ... power supply modules

At a Glance

Each power supply module has a slot for the installation of a battery which supplies the internal **RAM** memory of the processors in order to save the data when the PLC is switched off.

This battery is delivered in the same packaging as the power supply module. When inserting it, you must respect the polarities.

NOTE: If a Atrium processor which can be integrated into a PC is being used, the back-up battery is built into the processor and its characteristics are the same as those described below.

Data on the back-up battery

Battery characteristics: thyonile lithium chloride battery, 3.6V/0.8 Ah, 1/2AA size.

Spare part product reference: TSX PLP 01.

Period for which data is stored: the data storage time depends on two factors:

- the percentage of time for which the PLC is switched off and as a result the battery is being used,
- the ambient temperature when the PLC is switched off.

Table of the ambient temperatures when switched off:

Ambient temperature when inoperative		≤ 30°C	40°C	50°C	60°C
Backup time	PLC off for 12 hours per day	5 years	3 years	2 years	1 year
	PLC off for 1 hour per day	5 years	5 years	4.5 years	4 years

Monitoring the battery status: when the power is on, it monitors the status of the battery. If the battery is less than nominal, the user is informed visually by the **BAT** (red) LED which lights up. If this happens, the battery must be changed immediately. The %S68 system bit gives the status of the backup battery (0 = battery OK).

Changing the battery: the battery can be changed when the power supply module is on, or immediately after switching it off. In the latter case, the time for intervention is limited.

The backup time depends on the ambient temperature. Assuming that the processor was switched on previously, the typical backup time varies in the following way.

Ambient temperature when switching off	20°C	30°C	40°C	50°C
Backup time	2h	45mn	20mn	8mn

Power supply failure to rack other than rack 0

General

All the channels on this rack are seen as in error by the processor, but the other racks are not affected. The values of the inputs in error are no longer updated in the application memory and are reset to zero in a discrete input module, unless they have been forced, when they are maintained at the forcing value.

Limit of failure period

If the failure period is less than 10 ms for alternating current power supplies or less than 1 ms direct current power supplies, the failure is not detected by the program, which will run as normal.

What happens after pressing the RESET button on a power supply module

General

The power supply module of each rack has a RESET button on its front panel, which when pressed triggers an initialization sequence of the modules on the rack it is supplying.

When this action takes place in a power supply module in the rack supporting the TSX P57/TSX H57 processor (rack 0), it causes a warm restart.

Special case with the PCI 57 processor

In this case, the processor is not physically present on the rack at address 0, so pressing the RESET button on the rack power supply module does not cause the application to warm restart, nevertheless the modules present on the rack are reinitialized.

Chapter 37
TSX PSY … supply modules : auxiliary functions

Aim of this Chapter

This Chapter deals with the auxiliary functions of TSX PSY … supply modules .

What Is in This Chapter?

This chapter contains the following topics:

Topic	Page
Alarm relay on TSX PSY supply modules	288
Characteristics of the alarm relay contact	290

Alarm relay on TSX PSY supply modules

Introduction

The alarm relay located in each supply module has a potential free contact, which can be accessed on the module's screw connection terminal block.

Illustration:

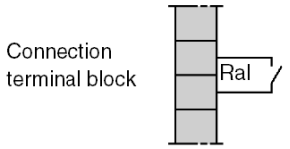

Alarm relay of the module situated on the rack supporting the processor (rack 0)

When operating normally, with the PLC in **RUN** mode, the alarm relay is activated and its contact is closed (state 1). Whenever the application is stopped, even partially, when a "blocking" error appears, when there are incorrect output voltages or power disappears, the relay falls back and its associated contact opens (state 0).

Illustration:

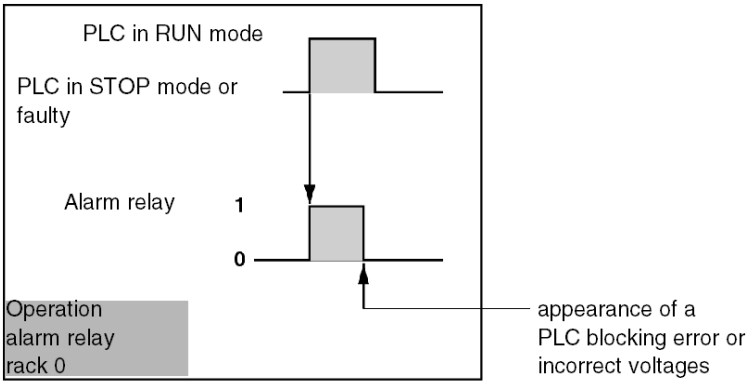

⚠ CAUTION
UNEXPECTED EQUIPMENT BEHAVIOR Do not use the supply module alarm relay when the Atrium processor is integrated into a PC (because it is not operating in this configuration). **Failure to follow these instructions can result in injury or equipment damage.**

⚠ CAUTION

UNEXPECTED APPLICATION BEHAVIOR.

In step by step mode or when using breakpoint,ensure that the behavior of the alarm relay does not influence the outputs state. Set bit %S9 to 1 in order to force the outputs to fallback mode.

Failure to follow these instructions can result in injury or equipment damage.

If this function is absolutely imperative for the proper operation of the installation, the alarm relay of the power supply module can be replaced by the use of an alarm relay output on the X Bus or the FIPIO bus. In order to achieve this, this output should be:

- a relay output,
- configured with fallback to 0 (default configuration),
- initialized at state 1 when the application program starts executing.

When configured in this way, the relay output will behave in the same way as the alarm relay controlled by a TSX P57/TSX H57 processor.

Alarm relay for modules on the other racks (1 to 7)

Once the module has been switched on and if the output voltages are correct, the alarm relay is activated and the contact is closed (state 1).

If the power disappears, or if the output voltages are incorrect, the relay falls back (state 0).

These modes of operation allow these contacts to be used in fail-safe external circuits, as, for example, the automatic control of pre-actuator supplies, or the transmission of information.

Characteristics of the alarm relay contact

Characteristics

Relay alarm contact.

Voltage limit when in use	Alternating current				19..0.264 V	
	Direct current (possible up to 34V for 1hr in every 24hrs)				10...30 V	
Thermal current	3 A					
Alternating current load	**Resistive load AC 12**	Voltage	~24V	~48V	~110V	~220V
		Power	50VAC (5)	50VAC (6) 110VAC (4)	110VAC (6) 220VAC (4)	220VAC (6)
	Inductive AC14 and AC15	Voltage	~24V	~48V	~110V	~220V
		Power	24VAC (4)	10VAC (10) 24VAC (8)	10VAC (11) 50VAC (7) 110VAC (2)	10VAC (11) 50VAC (9) 110VAC (6) 220VAC (1)
Direct current load	**Resistive DC12**	Voltage	24V (direct)			
		Power	24 W (6) 40 W (3)			
	Inductive load DC13 (L/R=60ms)	Voltage	24V (direct)			
		Power	10 W (8) 24 W (6)			
	Minimum switchable load		1mA/5V			
Response time	Activation	< 10 ms				
	Deactivation	< 10 ms				

Type of contact	Normally open		
Built-in protection	Against overloading and short circuits		None, a fast-blow fuse must be fitted
	Against inductive over-voltage in ~		None, compulsory installation – in parallel to the terminals of each pre-actuator - of a RC circuit or MOV (ZNO) peak limiter, appropriate to the voltage in use
	Against direct current inductive over-voltage		None, a discharge diode must be fitted to the terminals of each pre-actuator.
Insulation (test voltage)	Contact/ground	2000 V rms-50/60Hz-1mn (on modules TSX PSY 2600/5500/1610/3610/5520)	
		3000 V rms-50/60Hz-1mn (on module TSX PSY 8500)	
	Resistance of insulation	> 10 MΩ under 500 VDC	

(1) 0.1 x 7^6 operations (7) 1.5 x 10^6 operations

(2) 0.15 x 8^6 operations (8) 2 x 10^6 operations

(3) 0.3 x 9^6 operations (9) 3 x 10^6 operations

(4) 0.5 x 10^6 operations (10) 5 x 10^6 operations

(5) 0.7 x 10^6 operations (11) 10 x 10^6 operations

(6) 1 x 10^6 operations

Chapter 38
TSX PSY power supply modules: breakdown of power consumption and power

Aim of this Chapter

The aim of this Chapter is to provide a breakdown of power consumption and power for the selection of the power supply module.

What Is in This Chapter?

This chapter contains the following topics:

Topic	Page
Breakdown of power consumption for selection of the power supply module	294
Power consumption breakdown	296
Power consumption breakdown	297
Power consumption breakdown	298
Power Consumption Breakdown	299
Power consumption breakdown	300
Breakdown of power	301

Breakdown of power consumption for selection of the power supply module

General points

The power needed to supply a rack depends on the type of modules installed on it. It is therefore necessary to perform a consumption report in order to define the supply module to be mounted on the rack (standard or double format module).

Reminder of the outputs available with each power supply module

Summary table:

	Standard format		Double format			
	TSX PSY 1610	TSX PSY 2600	TSX PSY 3610	TSX PSY 5520	TSX PSY 5500	TSX PSY 8500
Total output (all outputs included)(1) **(4b)**	30 W (30 W)	26W (30 W)	50 W (55) W	50 W (55 W)	50 W (55 W)	77W at 60°C 85W at 55°C, 100W with a TSX FAN
Power available on 5 VDC output (1 b)	15 W	25 W	35 W	35 W	35 W	75 W
Power available on 24 VR output (2 b)	15 W	15 W	19 W	19 W	19 W	not supplied
Power available on 24VDC output (sensors supply on the front panel terminal block) **(3 b)**	not supplied	12 W	not supplied	not supplied	19 W	38 W

(1) The values in brackets correspond to the maximum values which can be supported for 1 minute every 10 minutes. These values should not be taken into account when calculating the breakdown of power consumption.

⚠ WARNING

UNEXPECTED EQUIPMENT BEHAVIOR

When selecting the power supply module, ensure that the available power on each output (5 VDC, 24 VR and 24 VDC), and the total available power, are superior to the consumption needs computed through the breakdown of power method.

Failure to follow these instructions can result in death, serious injury, or equipment damage.

NOTE: The TSX PSY 8500 supply module does not have a 24 VR output for supplying some modules at 24VDC. Therefore, the following provisions and preparations must be made for all racks which have this type of power supply:

- the relay output modules TSX DSY 08R . / 16R. and the weighing module TSX ISP Y 100 cannot be installed on these racks,
- the TSX ASY 800 analog output modules should be configured using an external power supply (maximum of 3 modules per rack).

Breakdown of power

Table of power breakdown:

Rack number:			
1	Power required at 5VDC output:	.....x10^{-3}Ax5V	=.....W
2	Power required at 24VR output:	.....x10^{-3}Ax24V	=.....W
3	Power required at 24VS output:	.....x10^{-3}Ax24V	=.....W
4	Total power required:		=.....W

Power consumption breakdown

Table 1

This table shows the typical power consumption of each module and can be used to calculate the power consumption per rack and on each output depending on the modules installed:

Module type	Product references	Consumption in mA (typical value) (1)		
		At 5VDC	At 24 VR	At 24VS (2)
Processor + PCMCIA memory card	TSX P57 0244/104/204	850		
	TSX P57 154/254	930		
	TSX P57 1634/2634	1650		
	TSX P57 304	1100		
	TSX P57 354	1180		
	TSX P57 3634	1900		
	TSX P57 454	1680		
	TSX P57 4634	1880		
	TSX P57 554	1680		
	TSX P57 5634	1880		
	TSX P57 6634	1880		
	TSX H57 24M	1880		
	TSX H57 44M	1880		
Discrete inputs	TSX DEY 08D2	55		80
	TSX DEY 16A2	80		
	TSX DEY 16A3	80		
	TSX DEY 16A4	80		
	TSX DEY 16A5	80		
	TSX DEY 16D2	80		135
	TSX DEY 16D3	80		135
	TSX DEY 16FK	250		75
	TSX DEY 32D2K	135		160
	TSX DEY 32D3K	140		275
	TSX DEY 64D2K	155		315

(1) Module consumption is given for 100% of inputs or outputs in state 1.

(2) If using a 24V (direct) external sensor supply, the consumption on this output should not be taken into account when selecting the power supply for the rack.

Power consumption breakdown

Table 2

This table shows the typical power consumption of each module and can be used to calculate the consumption per rack and on each output depending on the modules installed:

Module type	Product references	Consumption in mA (typical value) (1)		
		At 5VDC	At 24 VR	At 24VC (2)
Discrete outputs	TSX DSY 08R4D	55	80	
	TSX DSY 08R5	55	70	
	TSX DSY 08R5A	55	80	
	TSX DSY 08S5	125		
	TSX DSY 08T2	55		
	TSX DEY 08T22	55		
	TSX DEY 08T31	55		
	TSX DEY 16R5	80	135	
	TSX DEY 16S4	220		
	TSX DEY 16S5	220		
	TSX DEY 16T2	80		
	TSX DEY 16T3	80		
	TSX DSY 32T2K	140		
	TSX DSY 64T2K	155		
Discrete Inputs/Outputs	TSX DMY 28FK	300		75
	TSX DMY 28RFK	300		75
Emergency stop backup	TSX PAY 262	150		
	TSX PAY 282	150		
Remote X-Bus	TSX REY 200	500		

(1) Module consumption is given for 100% of inputs or outputs in state 1.

(2) If using a 24V (direct) external sensor supply, the consumption on this output should not be taken into account when selecting the power supply for the rack.

Power consumption breakdown

Table 3

This table shows the typical power consumption of each module and can be used to calculate the power consumption per rack and on each output depending on the modules installed:

Module type	Product references	Consumption in mA (typical value) (1)		
		At 5VDC	At 24 VR	At 24VS (2)
Analog	TSX AEY 414	660		
	TSX AEY 420	500		
	TSX AEY 800	270		
	TSX AEY 810	475		
	TSX AEY 1600	270		
	TSX AEY 1614	300		
	TSX AEY 410	990		
	TSX AEY 800 (3)	200	300	
Counting	TSX CTY 2A	280		30
	TSX CTY 2C	850		15
	TSX CTY 4A	330		36
Axis control	TSX CAY 21	1100		15
	TSX CAY 22	1100		15
	TSX CAY 41	1500		30
	TSX CAY 42	1500		30
	TSX CAY 33	1500		30
Step by step control	TSX CFY 11	510		50
	TSX CFY 21	650		100
Weighing	TSX ISPY 100 (3)	150	145	

(1) Module consumption is given for 100% of inputs or outputs in state 1.

(2) If using a 24V (direct) external sensor supply, the consumption on this output should not be taken into account when selecting the power supply for the rack.

(3) If using a 24VR (direct) external power supply, the consumption of power on the internal 24VR should not be taken into account when selecting the rack power supply.

Power Consumption Breakdown

Table 4

This table shows the typical power consumption of each module and can be used to calculate the power consumption per rack and on each output depending on the modules installed:

Module type	**Product references**	**Consumption in mA** (typical value) (1)		
		At 5VDC	**At 24 VR**	**At 24VS (2)**
Communication	TSX ETY 110 (3) (4)	800		
		1200		
	TSX ETY 120 (3) (4)	800		
		1200		
	TSX ETY 210 (3) (4)	800		
		1200		
	TSX IBY 100	500		
	TSX PBY 100	400		
	TSX SAY 100	110		
	TSX SCY 21601	350		
	TSX SCP 111	140		
	TSX SCP 112	120		
	TSX SCP 114	150		
	TSX FPP 10	330		
	TSX FPP 20	330		
	TSX JNP 112	120		
	TSX JNP 114	150		
	TSX MBP 100	220		
	TSX MDM 10	195		

(1) Module consumption is given for 100% of inputs or outputs in state 1,

(2) If using a 24V (direct) external sensor power supply, the consumption on this output should not be taken into account when selecting the power supply for the rack,

(3) Without remote power feed (RJ45),

(4) With remote power feed (AUI).

Power consumption breakdown

Table 5

This table shows the typical power consumption of each module and can be used to calculate the power consumption per rack and on each output depending on the modules installed:

Module type	**Product references**	**Consumption in mA** (typical value) (1)		
		At 5VDC	**At 24 VR**	**At 24VS (2)**
Other (devices without their own power supply which can be connected to the terminal port)	TSX P ACC01	150		
	T FTX 117	310		

(1) Module consumption is given for 100% of inputs or outputs in state 1,

(2) If using a 24V (direct) external sensor power supply, the consumption on this output should not be taken into account when selecting the power supply for the rack.

Breakdown of power

General

The breakdown of power for a rack will be established according to the breakdown of power consumption carried out from the tables defined in the breakdown of power consumption *(see page 294)*.

Power calculation table for a rack:

Rack number:			
1	Power required at 5V DC output:	(1)...x10^{-3}Ax5V	=.....W
2	Power required at 24 VR output:	(1)...x10^{-3}Ax5V	=.....W
3	Power required at 24 VS output:	(1)...x10^{-3}Ax5V	=.....W
4	Total power required:		=.....W

(1) This operand corresponds to the sum of the currents consumed by each rack module on the 5V DC output

(2) This operand corresponds to the sum of the currents consumed by each rack module on the 24 VR output

(3) This operand corresponds to the sum of the currents consumed by each rack module on the 24 VS output

⚠ WARNING

UNEXPECTED EQUIPMENT BEHAVIOR

When selecting the power supply module, ensure that the available power on each output (5 VDC, 24 VR and 24 VDC), and the total available power, are superior to the consumption needs computed through the breakdown of power method.

Failure to follow these instructions can result in death, serious injury, or equipment damage.

Reminder of the power available (on each total output)

Table of supply module power ratings:

	On 5V DC output	On 24 VR output	On 24 VS output	Total
TSX PSY 1610	15 W	15 W	-	30 W
TSX PSY 2600	25 W	15 W	12 W	26 W
TSX PSY 3610	35 W	19 W	-	50 W
TSX PSY 5520	35 W	19 W	-	50 W
TSX PSY 5500	35 W	19 W	19 W	50 W
TSX PSY 8500	75 W	-	38 W	77/85/100W (1)

(1) 77 W at 60°C, 85 W at 55°C, 100 W at 55°C if the rack is fitted with a ventilation module.

Chapter 39
TSX PSY 2600 power supply module

Characteristics of the TSX PSY 2600 power supply module

Characteristics

The TSX PSY 2600 module is a single format alternating current power supply module.

Reference	TSX PSY 2600		
	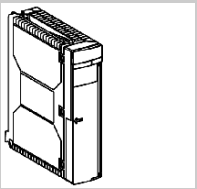		
Primary	Nominal voltage (V) ~		100...240
	Voltage limits (V) ~		85...264
	Nominal and limit frequencies		50-60/47-63Hz
	Apparent power		50 VA
	Nominal current consumption: Irms		≤ 0.5A to 100V ≤ 0.3A to 240V
	Initial power-up at 25°C (1)	I signal	≤ 37A to 100V ≤ 75A to 240V
		I^2t on locking	$0.63A^2s$ to 100V $2.6A^2s$ to 240V
		It on locking	0.034 As at 100V 0.067 As at 240V
	Accepted length of micro-power outages		≤10ms
	Integrated phase protection	via internal, non-accessible fuse	

Reference	TSX PSY 2600		
	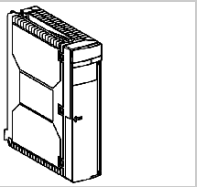		
Secondary	Total output		26W
	5VDC output	Nominal voltage:	5.1V
		Nominal current	5A
		Power (typical)	25W
	24VR output (24V relay) (2)	Nominal voltage:	24VDC
		Nominal current	0.6A
		Power (typical)	15W
	24VS output (24V sensor)	Nominal voltage:	24VDC
		Nominal current	0.5A
		Power (typical)	12W
	Protection of output from	overloading/short circuits/over-voltages	
Power dissipation			10W
Auxiliary functions			
Alarm relay	yes (1 contact closed, free from potential on terminal block)		
Display	yes, via LED on front panel		
Back-up battery	yes (status monitored via LED on front panel of module)		
Conformity to the norms	IEC 1131-2		
Insulation	Dielectric resistance (50/60Hz-1mn)	Primary/secondary	2000 Vrms
		Primary/ground	2000 Vrms
		24VDC output/ground	-
	Resistance of insulation	Primary/secondary	≥ 100 MΩ
		Primary/ground	≥ 100 MΩ

(1) These values should be taken into account when starting up several devices at the same time, or for dimensioning the protection systems.

(2) 24V direct current output for supplying relays of "relay output" modules.

Chapter 40
TSX PSY 5500 power supply module

Characteristics of the TSX PSY 5500 power supply module

Characteristics

The TSX PSY 5500 module is a double format alternating current power supply module.

Reference			
	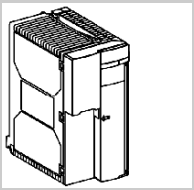		
Primary	Nominal voltage (V) ~		100..120/200..240
	Voltage limits (V) ~		85..140/190..264
	Nominal and limit frequencies		50-60/47-63Hz
	Apparent power		150 VA
	Nominal current consumption: Irms		≤ 1.7A to 100V ≤ 0.5A to 240V
	Initial power-up at 25°C (1)	I signal	≤ 38A to 100V ≤ 38A to 240V
		I^2t on locking	$4A^2s$ to 100V $2A^2s$ to 240V
		It on locking	0.11 As at 100V 0.11 As at 240V
	Accepted length of micro-power outages		≤10ms
	Integrated phase protection	via internal, non-accessible fuse	

Reference			
	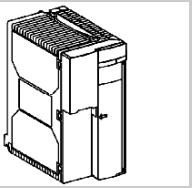		
Secondary	Total output		50W
	5VDC output	Nominal voltage:	5.1V
		Nominal current	7A
		Power (typical)	35W
	24VR output (24V relay) (2)	Nominal voltage:	24VCC
		Nominal current	0.8A
		Power (typical)	19W
	24VS output (24V sensor)	Nominal voltage:	24VCC
		Nominal current	0.8A
		Power (typical)	19W
	Protection of output from	overloading/short circuits/over-voltages	
Power dissipation			20W
Auxiliary functions			
Alarm relay	yes (1 contact closed, free from potential on terminal block)		
Display	yes, via LED on front panel		
Back-up battery	yes (status monitored via LED on front panel of module)		
Conformity to the norms	IEC 1131-2		
Insulation	Dielectric resistance (50/60Hz-1mn)	Primary/secondary	2000 Vrms
		Primary/ground	2000 Vrms
		24VDC output/ground	-
	Resistance of insulation	Primary/secondary	≥ 100 MΩ
		Primary/ground	≥ 100 MΩ

(1) These values should be taken into account when starting up several devices at the same time, or for dimensioning the protection systems.

(2) 24V direct current output for supplying relays of "relay output" modules.

Chapter 41
TSX PSY 8500 power supply module

Characteristics of the TSX PSY 8500 power supply module

Characteristics

The TSX PSY 8500 module is a double format alternating current power supply module.

Reference			
	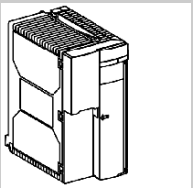		
Primary	Nominal voltage (V) ~		100..120/200..240
	Voltage limits (V) ~		85..140/170..264
	Nominal and limit frequencies		50-60/47-63Hz
	Apparent power		150 VA
	Nominal current consumption: Irms		≤ 1.4A to 100V ≤ 0.5A to 240V
	Initial power-up at 25°C (1)	I signal	≤ 30A to 100V ≤ 60A to 240V
		I^2t on locking	$15A^2s$ to 100V $8A^2s$ to 240V
		It on locking	0.15 As at 100V 0.15 As at 240V
	Accepted length of micro-power outages		≤10ms
	Integrated phase protection	via internal, non-accessible fuse	

Reference			
	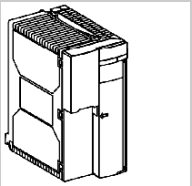		
Secondary	Total output		77/85/100W (2)
	5VDC output	Nominal voltage:	5.1V
		Nominal current	15A
		Power (typical)	75W
	24VR output (24V relay) (3)	Nominal voltage:	not supplied
		Nominal current	not supplied
		Power (typical)	not supplied
	24VS output (24V sensor)	Nominal voltage:	24VDC
		Nominal current	1.6A
		Power (typical)	38W
	Protection of output from	overloading/short circuits/over-voltages	
Power dissipation			20W
Auxiliary functions			
Alarm relay	yes (1 contact closed, free from potential on terminal block)		
Display	yes, via LED on front panel		
Back-up battery	yes (status monitored via LED on front panel of module)		
Conformity to the norms	IEC 1131-2		
Insulation	Dielectric resistance (50/60Hz-1mn)	Primary/secondary	3000 Vrms
		Primary/ground	3000 Vrms
		24VDC output/ground	500 Vrms
	Resistance of insulation	Primary/secondary	≥ 100 MΩ
		Primary/ground	≥ 100 MΩ

(1) These values should be taken into account when starting up several devices at the same time, or for dimensioning the protection systems.

(2) 77W at 60°C, 85W at 55°C, 100W at 55°C, if the rack is fitted with ventilation modules.

(3) 24V direct current output for supplying relays of "relay output" modules.

Chapter 42
TSX PSY 1610 power supply module

Characteristics of the TSX PSY 1610 power supply module

Characteristics

The TSX PSY 1610 module is a single format non-isolated direct current power supply module.

Reference	TSX PSY 1610		
	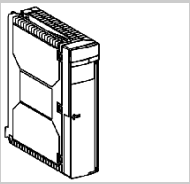		
Primary	Nominal voltage (not isolated)		24 VDC
	Voltage limits (including ripple) (1) (possible up to 34 V for 1 hour in every 24 hours)		19.2 to 30 Vdc
	Nominal input current: Irms at 24 Vdc		≤1.5 A
	Initial power-up at 25°C (2)	I signal	≤ 100A at 24 Vdc
		I^2t on locking	6 A^2s
		It on locking	0.1 As
	Accepted length of micro-power outages		≤1 ms
	Integrated input protection	via 5x20 time delay fuse, 3.5 A	

Reference	TSX PSY 1610		
	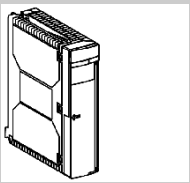		
Secondary	Total output (typical)		30 W
	5VDC output	Nominal voltage:	5 V
		Nominal current	3 A
		Power (typical)	15 W
	24VR output (24VDC relay) (3)	Nominal voltage:	U network – 0.6 V
		Nominal current	0.6 A
		Power (typical)	15 W
	Built-in output protection against (4)	Overloading	yes
		Short circuits	yes
		Over-voltage	yes
Power dissipation			10 W
Auxiliary functions			
Alarm relay	yes (1 contact closed, free from potential on terminal block)		
Display	yes, via LED on front panel		
Back-up battery	yes (status monitored via LED on front panel of module)		
Conformity to the norms			IEC1131-2

(1) With the supply of "relay output" modules, the limit range is reduced to 21.6... 26.4 V.

(2) These values should be taken into account when starting up several devices at the same time, and for dimensioning the protection systems.

(3) 24 Vdc output for supplying relays of "relay output" modules.

(4) The 24 VR output voltage, which cannot be accessed by the user, is protected by a fuse which is located under the module (5x20, 4 A, Medium type).

Chapter 43
TSX PSY 3610 power supply module

Characteristics of the TSX PSY 3610 power supply module

Characteristics

The TSX PSY 3610 module is a double format non-insulated direct current supply module.

Reference			
	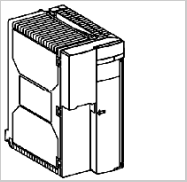		
Primary	Nominal voltage		24 Vdc
	Voltage limits (including ripple) (1) (possible up to 34 V for 1hour in every 24 hours)		19.2 to 30 Vdc
	Nominal input current: Irms at 24 VDC		≤2.7 A
	Initial power-up at 25°C (2)	I signal	≤ 150 A at 24 Vdc
		I^2t on locking	26 A^2s
		It on locking	0.3 As
	Accepted length of micro-power outages		≤1 ms
	Integrated input protection	no	

Reference			
	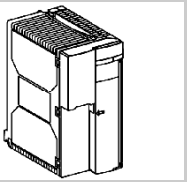		
Secondary	Total output (typical)		50 W
	5VDC output	Nominal voltage:	5.1 V
		Nominal current	7 A
		Power (typical)	35 W
	24 VR output (24 V relay) (3)	Nominal voltage:	U network – 0.6 V
		Nominal current	0.8 A
		Power (typical)	19 W
	Built-in output protection against (4)	Overloading	yes
		Short circuits	yes
		Over-voltage	yes
Power dissipation			15 W
Auxiliary functions			
Alarm relay	yes (1 contact closed, free from potential on terminal block)		
Display	yes, via LED on front panel		
Back-up battery	yes (status monitored via LED on front panel of module)		
Conformity to the norms			IEC1131-2

(1) With the supply of "relay output" modules, the limit range is reduced to 21.6...26.4 V.

(2) These values should be taken into account when starting up several devices at the same time, and for dimensioning the protection systems.

(3) 24 V direct current output for supplying relays of "relay output" modules.

(4) The 24 VR output voltage, which cannot be accessed by the user, is protected by a fuse which is located under the module (5x20, 4 A, Medium type).

Chapter 44
TSX PSY 5520 power supply module

Characteristics of the TSX PSY 5520 power supply module

Characteristics

The TSX PSY 5520 module is a double format insulated direct current power supply module.

Reference			
	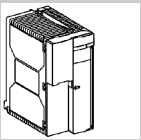		
Primary	Nominal voltage		24..0.48 Vdc
	Voltage limits (including ripple)		19.2 to 60 Vdc
	Nominal input current: Irms		≤ 3 A at 24 Vdc ≤ 1.5 A at 48 Vdc
	Initial power-up at 25°C (1)	I signal	≤ 15 A at 24 Vdc ≤ 15 A at 48 Vdc
		I^2t on locking	2.2 A^2s at 24 Vdc 1.8 A^2s at 48 Vdc
		It on locking	0.25 As at 24 Vdc 0.15 As at 48 Vdc
	Accepted length of micro-power outages		≤1 ms
	Built-in protection of + input	by internal, non-accessible fuse module	
Secondary	Total output (typical)		50 W
	5VDC output	Nominal voltage:	5.1 V
		Nominal current	7 A
		Power (typical)	35 W
	24 VR output (24 Vdc relay) (2)	Nominal voltage:	24 V
		Nominal current	0.8 A
		Power (typical)	19 W
	Built-in output protection against	Overloading	yes
		Short circuits	yes
		Over-voltage	yes

Reference			
	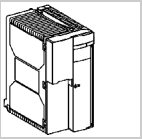		
Power dissipation			20 W
Auxiliary functions			
Alarm relay	yes (1 contact closed, free from potential on terminal block)		
Display	yes, via LED on front panel		
Back-up battery	yes (status monitored via LED on front panel of module)		
Conformity to the norms			IEC1131-2
Insulation	Dielectric resistance	primary/secondary primary/ground	2000 Vrms-50/60Hz-1mn 2000 Vrms-50/60Hz-1mn
	Resistance of insulation	primary/secondary primary/ground	≥ 10 MΩ ≥ 10 MΩ

(1) These values should be taken into account when starting up several devices at the same time, and for dimensioning the protection systems.

(2) 24 Vdc output for supplying the relays of the "relay output" modules.

Part V
Process power supplies

In This Chapter

The aim of this section is to describe the Process power supplies and their implementation.

What Is in This Part?

This part contains the following chapters:

Chapter	Chapter Name	Page
45	Process power supply modules: introduction	317
46	Process power supply modules: installation	329
47	Process supply modules: connections	339
48	Characteristics of the Process power supply modules	347

Chapter 45
Process power supply modules: introduction

Subject of this Chapter

The aim of this chapter is to provide an overview of Process power supply modules.

What Is in This Chapter?

This chapter contains the following topics:

Topic	Page
General Introduction to Process Power Supply Modules	318
Physical description of TBX SUP 10 supply block	319
Physical description of the TSX SUP 1011 supply module	320
Physical description of TSX 1021/1051 supply modules	321
Description of TSX SUP 1101 supply module	322
Physical description of the module mounting plate	323
Catalog of 24 V DC process power supplies	324
Process supply: auxiliary functions	326

General Introduction to Process Power Supply Modules

General

A wide range of power supply units and modules is offered to cater for the needs of users in the best possible way.

These are the TBX SUP 10 and TSX SUP 1..1 process power supply units and modules, designed to supply the peripherals of an automation system with 24 VDC, and controlled by PLCs (Micro and Premium). The peripherals consist of sensors, pre-actuators, coders, dialog terminals, controllers, LEDs, pushbuttons, cylinders, etc. This 24 V supply voltage can be provided from a 100/240 V, 50/60 Hz alternating current network.

The mounting method for these products has been carefully designed to comply with the specific center distances and mountings of Micro, Premium PLCs and TBX products.

All these products can be mounted:

- on an AM1-PA Telequick mounting grid,
- on an AM1-DP200/DE200 central DIN rail, except for the high-power supply modules TSX SUP 1101 and TSX A05.

Presentation Tables

This table presents the different Process power supply modules:

Process power supply				
Network voltage 100...240 VAC or 125 VDC		Network voltage 100...120/200...240 VAC		
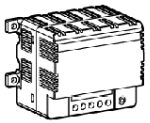 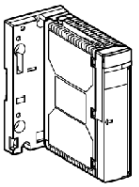		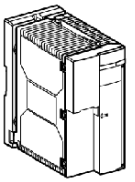	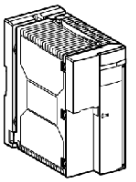	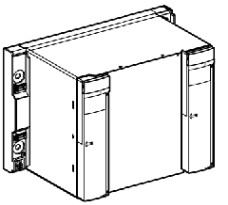
24 VDC 1A	24 VDC / 1A	24 VDC / 2A	24 VDC / 5A	24 VDC / 10A

Physical description of TBX SUP 10 supply block

Illustration

Diagram and numbers:

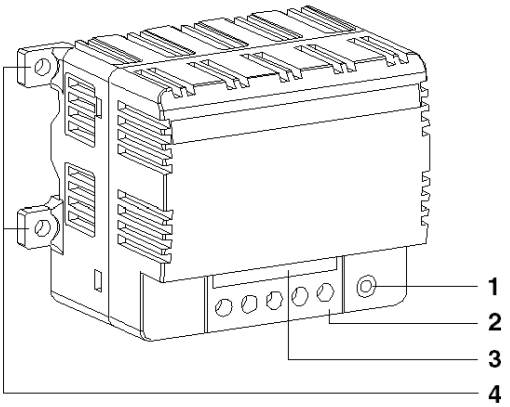

Number table

The following table shows the numbers and their corresponding descriptions from the diagram above:

Numbers	Description
1	LED showing power-up of module.
2	Screw terminal block for supply voltage wiring.
3	Identification label for the wire terminals.
4	Wings for fixing the module.

Physical description of the TSX SUP 1011 supply module

Illustration

Diagram and numbers:

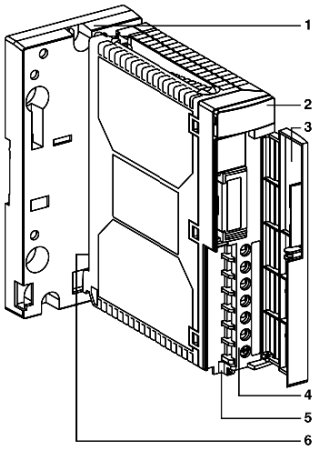

Number table

The following table shows the numbers and their corresponding descriptions from the diagram above:

Numbers	Description
1	Support board for fixing the supply module directly onto the AM1-DE200 / DP200 DIN mounting track or the AM1-PA Telequick perforated board.
2	Display block with: ● a 24 V LED (green): lit if the established internal and output voltages are correct, ● a LSH LED (orange) "power optimization mode": lit if the power supply is running in parallelization mode with power optimization.
3	Flap for protecting the terminal block.
4	Screw terminal block for connection: ● to the AC/DC supply network, ● to 24 VDC output.
5	Hole for the cable-tightening clip to go through.
6	"NOR/LSH" switch placed at the back of the module to control the power optimization system. ● NOR position: normal operation without power optimization (default position), ● LSH position: operation with power optimization with supply running in parallel. **Note:** Access to the switch requires the module to be removed from the support board.

Physical description of TSX 1021/1051 supply modules

Illustration

Diagram and numbers:

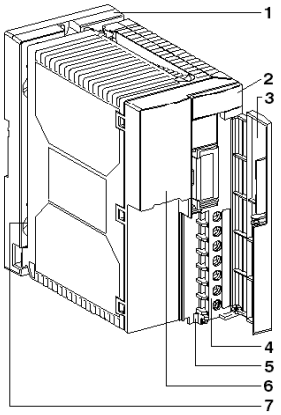

Number table

The following table shows the numbers and their corresponding descriptions from the diagram above:

Numbers	Description
1	Support board for fixing the supply module directly onto the AM1-DE200 / DP200 DIN mounting track or the AM1-PA Telequick perforated board.
2	Display block with: ● a 24 V LED (green): lit if the internal and output voltages are correct, ● a LSH LED (orange) only on TSX SUP 1021 "power optimization mode": lit if the power supply is running in parallelization mode with power optimization.
3	Flap for protecting the terminal block.
4	Screw terminal block for connection: ● to the AC/DC supply network, ● to 24 VDC output.
5	Hole for the cable-tightening clip to go through.
6	110/220 V voltage selector. On delivery, the selector is set at 220.
7	"NOR/LSH" switch placed at the back of the module to control the power optimization system. This switch is only present on the TSX SUP 1021 module. ● NOR position: normal operation without power optimization (default position), ● LSH position: operation with power optimization with supply running in parallel. **Note:** Access to the switch requires the module to be removed from the support board.

Description of TSX SUP 1101 supply module

Illustration

Diagram and item numbers:

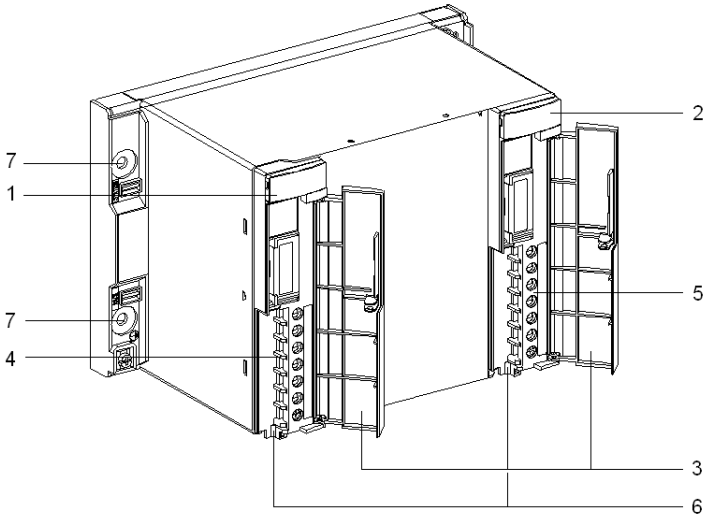

Number table

The following table provides descriptions for the items numbered in the above diagram:

Numbers	Description
1	Display panel featuring an ON LED (orange): lit if power supply on.
2	Display panel featuring a 24 V (green) LED, lit if the 24 V DC output voltage is correct.
3	Flap for protecting terminal blocks.
4	Screw terminal block for connection to the AC power supply network.
5	Screw terminal block for connecting the 24 V DC output voltage.
6	Holes for a cable-tightening clip to go through.
7	Four attaching holes to receive M6 screws.

Physical description of the module mounting plate

At a Glance

Each TSX SUP 10x1 power supply module is supplied pre-mounted on a support plate used to fix the module: either to a DIN AM1-DE200 or AM1-DP200 mounting rail, or to a Telequick AM1-PA mounting grid.

Each mounting grid can accommodate: either a single TSX SUP 1021 or TSX SUP 1051 module, or either one or two TSX SUP 1011 modules.

Illustration

Diagram and numbers:

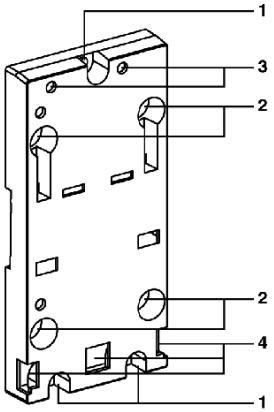

Number table

The following table provides descriptions for the items numbered in the above diagram:

Numbers	Description
1	Three 5.5 mm diameter holes for fixing the module support to an AM1-PA mounting grid or plate with a 140 mm center distance (mount center distance for TSX 37 PLCs).
2	Four 6.5 mm diameter holes for fixing the module support to an AM1-PA mounting grid or plate with a 88.9 mm center distance (mount center distance for TSX 57 PLCs).
3	Two M4 holes for attaching the TSX SUP 1011/1021/1051 power supply module(s).
4	Recesses to anchor the pins at the bottom and the rear of the module.

Catalog of 24 V DC process power supplies

Selection table

The following table gives the main characteristics of the 24 V DC process power supplies:

Product references	**TBX SUP 10**	**TSX SUP 1011**
	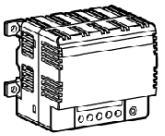	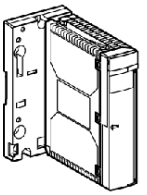
Input characteristics Nominal voltage	100...240 V AC or 125 V DC	
Thresholds	90..264VAC or 88..156VDC	85..264VAC or 105..150VDC
Limit frequency	47..63Hz	47..63Hz or 360..440Hz
Nominal input current	0.4A	0.4A
Output characteristics Useful power	24W	26W
Output voltage (DC)	24 VDC	
Nominal current	**1A**	**1A**
Auxiliary functions SELV safety (1)	No	Yes
Parallelization (2)	No	Yes with power optimization (3)
Redundancy (4)	No	Yes

Selection table (continued)

The following table gives the main characteristics of the 24 V DC process power supplies:

Product references	**TSX SUP 1021**	**TSX SUP 1051**	**TSX SUP 1101**
	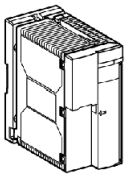	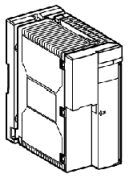	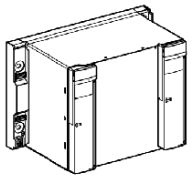
Input characteristics Nominal voltage	100...120 V AC or 200...240 V AC		
Thresholds	85..132VAC or 170..264VDC		
Limit frequency	47..63Hz or 360...440Hz		
Nominal input current	0.8A	2.4A	5A
Output characteristics Useful power	53W	120W	240W
Output voltage (DC)	24 VDC		
Nominal current	**2.2A**	**5A**	**10A**
Auxiliary functions SELV safety (1)	Yes		
Parallelization (2)	Yes with power optimization (3)		
Redundancy (4)	Yes	No	

(1) Build characteristics according to standards IEC 950, IEC 1131-2, guaranteeing user safety on the 24V output, in terms of insulation between primary and secondary, maximum overvoltages on the output wires, and ground circuit protection.

(2) Possibility of connecting 2 power supply outputs of the same type in parallel, in order to provide an output current greater than the maximum permitted with a single supply.

(3) For 2 modules supplying a total current of 100%, each module provides 50% of the total current. This improves the product service life.

(4) Connection of 2 power supply outputs of the same type in parallel, in order to provide an output current less than the maximum permitted with a single supply, but ensuring continuity of the output voltage even if one of the two modules becomes faulty.

Process supply: auxiliary functions

Parallelization mode with power optimization

The aim of parallelization is to use **two modules with the same product reference** in order to provide an output current which is greater than the maximum allowed by a single supply. The total current is the sum of the currents provided by all the supplies put together.

Power optimization is a system within the supply which is designed to distribute currents equally between parallel supplies. The resulting advantage is that the life of products is significantly extended, linked with distributed power consumption.

Dedicated supply features:

TSX SUP 1011/1021 supply	Power optimization mode is obtained by positioning the NOR/LSH switch at the rear of the modules onto LSH. To access the switch, the support board must be removed. When the orange LED (LSH) is lit, the mode is in operation. The current provided by two parallel supplies is limited to: ● 2A with 2 TSX SUP 1011 suppliers, ● 4A with 2 TSX SUP 1021 suppliers. Using this mode means output voltage can vary slightly: 24V + or - 5% instead 24 V + or - 3% in normal mode. When sharing loads, the power imbalance can reach a maximum of 25%. A specific connection *(see page 340)* is required for these types of modules.
TSX SUP 1051/1101 supply	Power optimization mode does not require a switch on these supply modules. A specific connection must be made for the TSX SUP 1051 *(see page 342)* module and the TSX SUP 1101 *(see page 344)* module. The maximum current provided by two parallel supplies is limited to: ● 10A with 2 TSX SUP 1051 suppliers, ● 20A with 2 TSX SUP 1101 suppliers. Using this mode will lead to no loss of output voltage: When sharing loads, the power imbalance can reach a maximum of 15%.

Redundancy on TSX SUP 1011/1021 power supplies

Principle:

To provide the currents required for the application, even in the event of loss of one of the power supplies.

To do this, the two suppliers are run in parallel by setting up the necessary connections (see *Connection of TSX SUP 1011/1021 power supplies, page 340*).

The suppliers are configured in power optimization mode.

Example: provide 1A with redundancy from 2 TSX SUP 1011 suppliers.

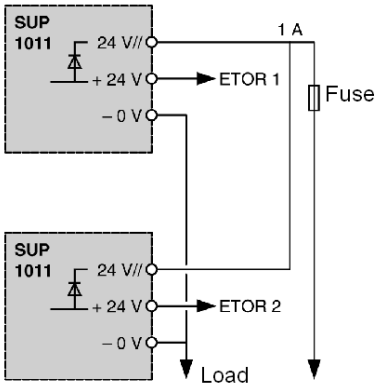

Discrete inputs 1 and 2 on the PLC indicate the loss of one or other of the power supplies.

NOTE: TSX SUP 1051 and 1101 suppliers are not equipped with a serial diode, which is required for the redundancy function.

Chapter 46
Process power supply modules: installation

Subject of this Chapter

This chapter covers the installation of Process power supply modules.

What Is in This Chapter?

This chapter contains the following topics:

Topic	Page
Dimensions/mounting of Process power supplies	330
TBX SUP 10 dimensions/mounting/connections	333
Dimensions/mounting of TSX SUP 1101 power supplies	335
Summary of mounting methods	337

Dimensions/mounting of Process power supplies

Dimensions

Illustration:

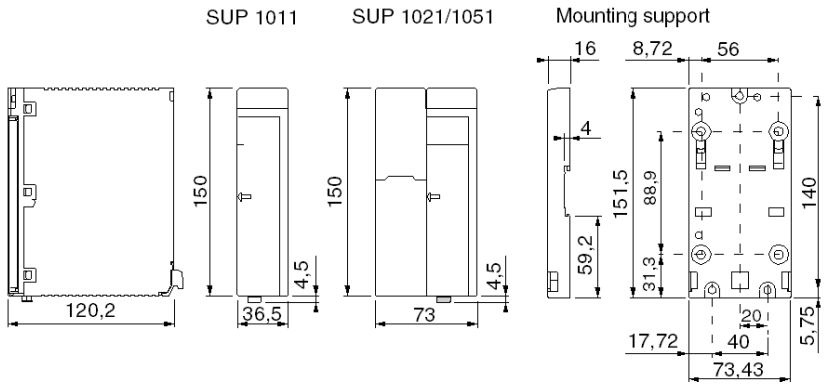

Dimensions in millimeters

Mounting on a AM1-DE200 or AM1-DP200 rail or a AM1-PA grid

Each power supply module is supplied pre-mounted on a support suitable for this type of installation.

Illustration:

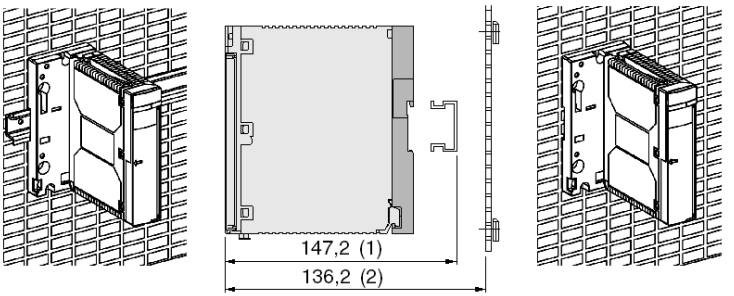

(1) 147.2 mm (AM1-DE200
139.7 mm (AM1-DP200)

(2) 136.7 mm (AM1-PA)

Mounting on a AM1-D.... rail

Carry out the following steps:

Steps	Action
1	Check that the module is mounted on the support.
2	Install the module + support assembly on the rail.

Mounting on a AM1-PA grid

Carry out the following steps:

Step	Action
1	Remove the module from its support.
2	Mount the support on the AM1-PA grid.
3	Mount the module on the support.

Mounting the module on the support

Each power supply module comes equipped with a support that enables it to be directly mounted on a DIN rail. This support can accommodate 1 or 2 TSX SUP 1011 power supply modules or 1 TSX SUP 1021/1051 module.

Carry out the following steps:

Step	Action
1	Anchor the pins on the module in the holes located at the bottom of the support.
2	Swivel the module to bring it into contact with the support.
3	Tighten the screw provided at the top of the module to fix it to the support.

Illustration:

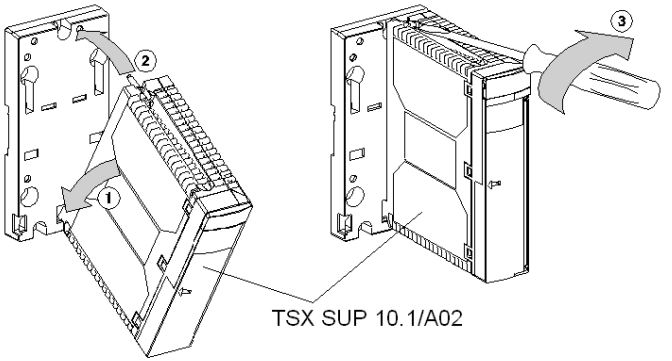

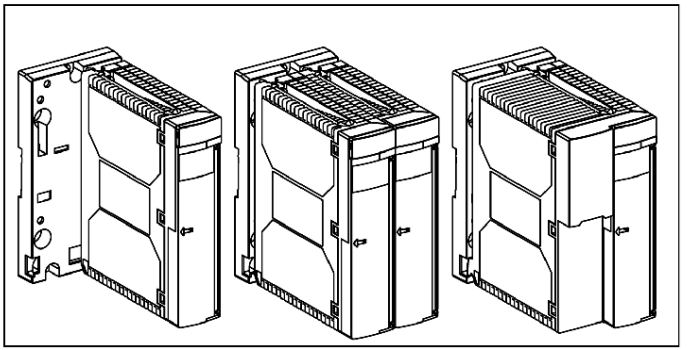

1 module	2 modules	1 module
TSX SUP 1011	TSX SUP 1011	TSX SUP 1021/1051

Mounting on a TSX RKY... rack

TSX SUP 1011/1021/1051 power supply modules can be installed in any position on the TSX RKY.. rack except for the PS position reserved for the rack power supply module. In this case, the support is not used and must be removed.

These modules are mounted in exactly the same way as the processor modules.

See *How to mount processor modules, page 98*.

NOTE: The TSX PSY... rack power supply module must be present in the PS position in order to power the rack modules.

TBX SUP 10 dimensions/mounting/connections

Dimensions/mounting

Illustration:

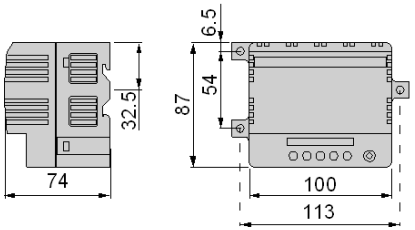

The TSX SUP 10 power supply module must be mounted vertically to optimize the natural convection of air inside the module.

It may be mounted on Telequick AM1-PA grid, plate or rail

Connections

Illustration:

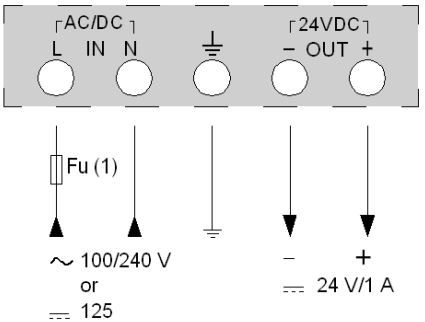

(1) External phase protection fuse: 1A time-delayed 250 V if power supply alone.

NOTE: Primary: if the module is powered with 100/240V alternating current, then phase and neutral must be wired correctly. If, however, the module power supply is 125 V DC, polarities need not be respected.
Secondary: the 0 V potential - terminal must be connected to ground at the power supply module output.

⚠ DANGER

ELECTRIC SHOCK

Connect the module's grounding terminal to the protective ground, using a green/yellow wire.

Failure to follow these instructions will result in death or serious injury.

Dimensions/mounting of TSX SUP 1101 power supplies

At a Glance

TSX SUP 1101 power supply modules may be mounted on a panel, an AM1-PA grid or a DIN rail.

Mounting on a panel

Plan of screw-holes (dimensions in mm):

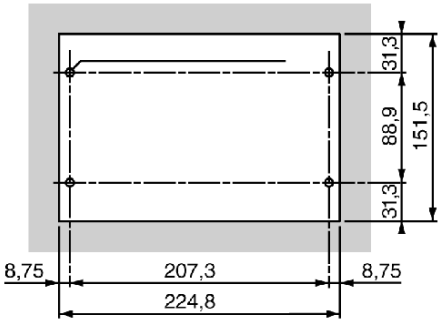

(1) The diameter of the fixing holes must be suitable for M6 screws.

Mounting on an AM1-PA Telequick mounting grid

Fix the supply module using M6x25 screws + washers and AF1-EA6 clips nuts (dimensions in millimeters):

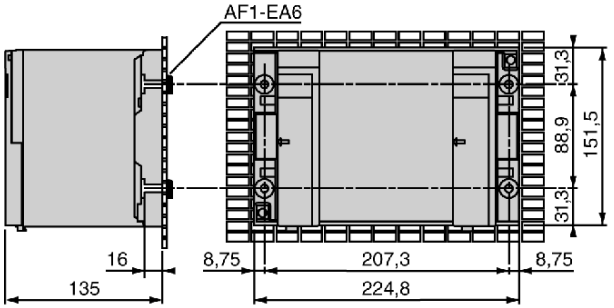

Mounting on 35 mm wide DIN mounting rail

Fix the supply module with four M6x25 screws + washers and AF1-CF56 1/4 turn sliding nuts (dimensions in millimeters):

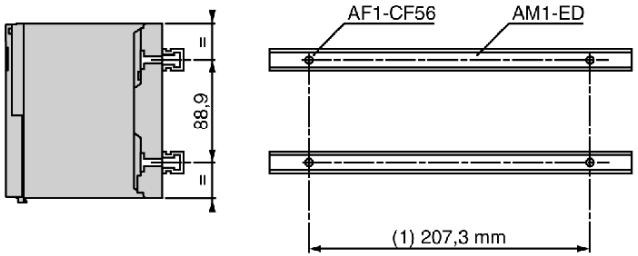

Summary of mounting methods

Summary table of mounting methods

The table below lists the various possible mounting methods available with the Process power supply modules:

Power supply reference	TSX SUP 10	TSX SUP 1011	TSX SUP 1021	TSX SUP 1051	TSX SUP 1101
AM1-PA Telequick mounting grid	X	X	X	X	X
AM1-DE200/DP200 central DIN rail	X	X	X	X	
AM1-ED DIN rail, center distance 140 mm (TSX 37 PLC)		X	X	X	
AM1-ED DIN rail, center distance 88,9 mm (TSX 57 PLC)		X	X	X	X
TSX 57 TSX RKY.. rack		X	X	X	

Chapter 47
Process supply modules: connections

Aim of this Chapter

This Chapter deals with the connection of Process supply modules.

What Is in This Chapter?

This chapter contains the following topics:

Topic	Page
Connection of TSX SUP 1011/1021 power supplies	340
Connection of TSX SUP 1051 power supplies	342
Connection of TSX SUP 1101 power supplies	344

Connection of TSX SUP 1011/1021 power supplies

Illustration

Connection diagram:

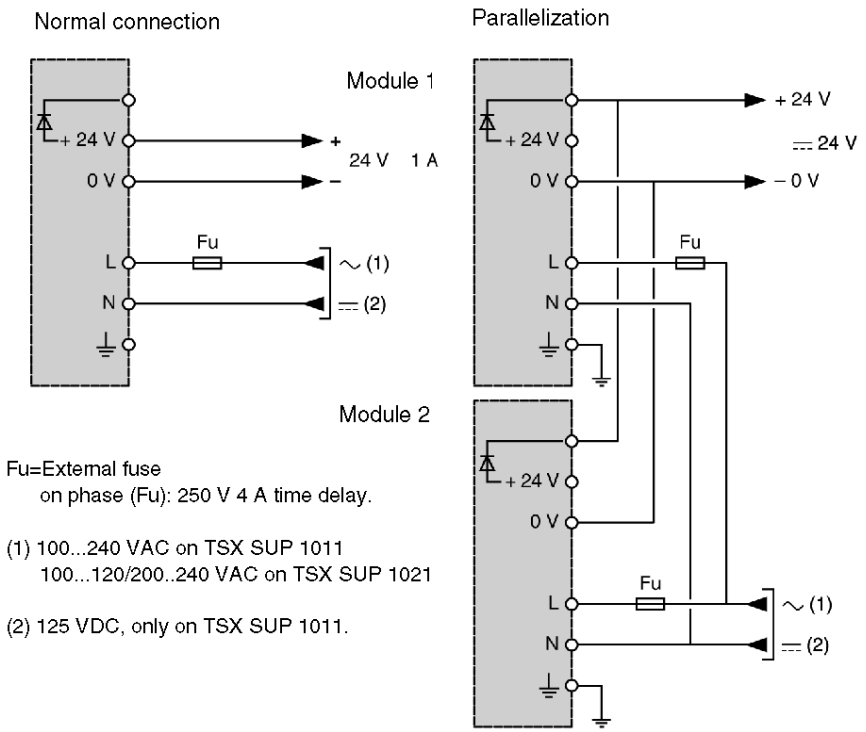

Connection rules

Primary:if the module is supplied with a 100/240 VAC power supply, it is necessary to observe wiring requirements for the phase and neutral when connecting the module. However, if the module is powered by a 125 VDC supply, it is not necessary to respect the polarities.

- an operating voltage ≥ 600 VAC with a cross-section of 1.5 mm^2 (14 AWG) for connection to the mains,

⚠ DANGER

ELECTRIC SHOCK

Connect the module grounding terminal to the protective ground, using a green/yellow wire.

Failure to follow these instructions will result in death or serious injury.

The power supply terminal is protected by a flap which allows access to the wiring terminals. The wires come vertically out of the power supply at its base. These wires can be kept in place with a cable-clip.

Secondary: to comply with isolation requirements (EN 60950) for a 24 V SELV isolated voltage, the following wiring is used:

- an operating voltage ≥ 300 VAC with a cross-section of 2.5 mm^2 (12 AWG) for the 24 V outputs and the ground.

Connection of TSX SUP 1051 power supplies

Illustration

Connection diagram:

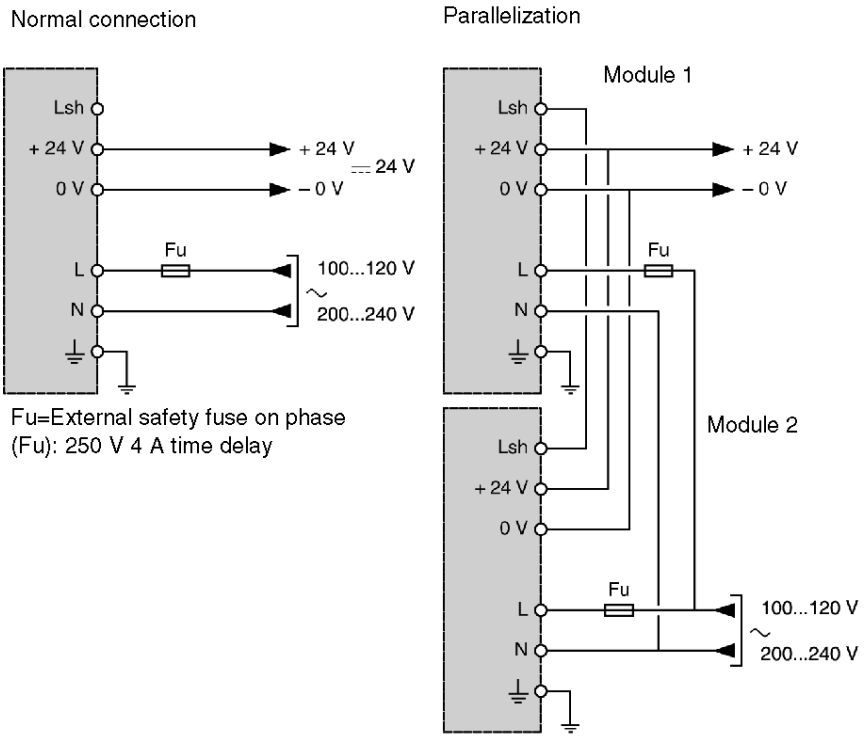

Connection rules

Primary: observe the rules concerning phase and neutral when wiring.

- an operating voltage ≥ 600 VAC with a cross-section of 1.5 mm^2 (14 AWG) for connection to the mains,

⚠ DANGER

ELECTRIC SHOCK

Connect the module grounding terminal to the protective ground, using a green/yellow wire.

Failure to follow these instructions will result in death or serious injury.

The power supply terminal is protected by a flap which allows access to the wiring terminals. The wires come vertically out of the power supply at its base. These wires can be kept in place with a cable-clip.

Secondary: to comply with isolation requirements (EN 60950) for a 24 V SELV isolated voltage, the following wiring is used:

- an operating voltage ≥ 300 VAC with a cross-section of 2.5 mm^2 (12 AWG) for the 24 V outputs and the ground.

Connection of TSX SUP 1101 power supplies

Illustration 1

Normal connection diagram:

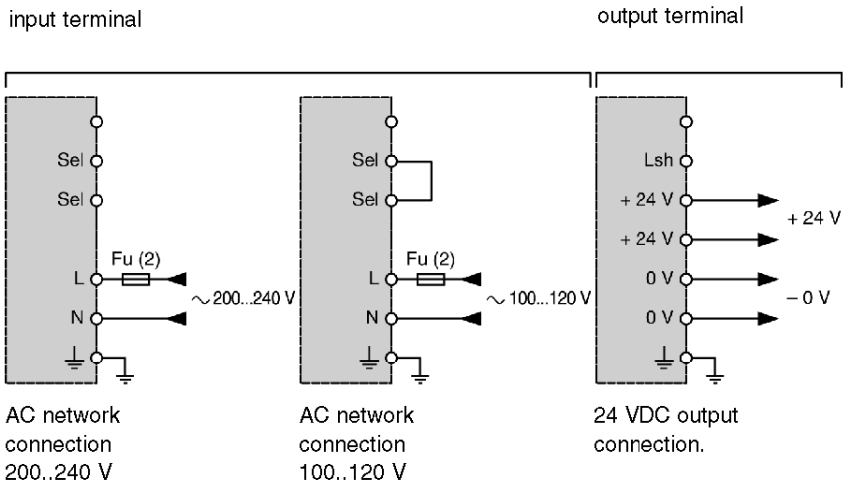

Illustration 2

Parallel connection diagram (parallelization):

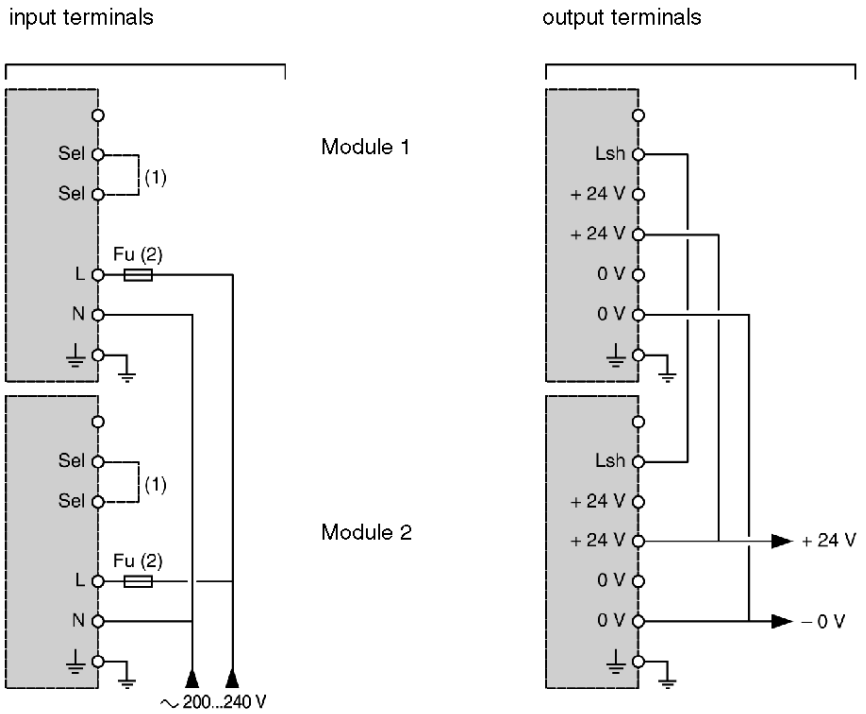

(1) Connection for a 100...120 VAC power supply.

(2) External fuse on phase (Fu): 250 V 6.3 A time delay.

Connection rules

Primary: Observe the rules concerning phase and neutral when wiring.

- an operating voltage ≥ 600 VAC with a cross-section of 1.5 mm^2 (14 AWG) or 2.5 mm^2 (12 AWG) for connection to the mains,

⚠ DANGER

ELECTRIC SHOCK

Connect the module grounding terminal to the protective ground, using a green/yellow wire.

Failure to follow these instructions will result in death or serious injury.

The power supply terminal is protected by a flap which allows access to the wiring terminals. The wires come vertically out of the power supply at its base. These wires can be kept in place with a cable-clip.

Secondary: To comply with isolation requirements (EN 60950) for a 24 V SELV isolated voltage, the following wiring is used:

- an operating voltage ≥ 300 VAC with a cross-section of 2.5 mm^2 (12 AWG) for the 24 V outputs and the ground.
- Wire the two 24 V terminals in parallel, or distribute the load over the two 24 V outputs when the total current to be supplied is greater than 5 A.

Chapter 48
Characteristics of the Process power supply modules

Subject of this Chapter

This chapter presents the different electrical characteristics of the Process power supply modules in tabular form.

What Is in This Chapter?

This chapter contains the following topics:

Topic	Page
Electrical characteristics of process supply modules: TBX SUP 10 and TSX SUP 1011	348
Electrical characteristics of process supply modules: TSX SUP 1021/1051/1101	350
Environmental characteristics	352

Electrical characteristics of process supply modules: TBX SUP 10 and TSX SUP 1011

Table of Characteristics

The following table describes the electrical characteristics of supply modules: TBX SUP 10 and TSX SUP 1011:

Process supply			TBX SUP 10 24V/1A	TSX SUP 1011 24V/1A
			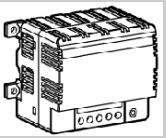	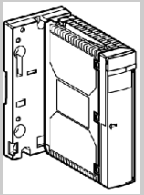
Primary				
Nominal input voltage		V	alternating 100240 direct 125	alternating 100240 direct 125
Input limit voltage		V	alternating 90264 direct 88156	alternating 85264 direct 105156
Network frequency		Hz	47...63	47...63/360...440
Nominal input current (U=100V)		On	0.4	0.4
Maximum call current (1)	to 100 V	On	3	37
	to 240 V	On	30	75
Maximum It on trigger (1)	to 100 V	As	0.03	0.034
	to 240 V	As	0.07	0.067
Maximum I^2t on trigger (1)	to 100 V	A^2s	2	0.63
	to 240 V	A^2s	2	2.6
Power factor			0.6	0.6
Harmonic (3)			10% (Phi=0°and 180°)	10% (Phi=0°and 180°)
Full load efficiency		%	>75	>75

Process supply			TBX SUP 10 24V/1A	TSX SUP 1011 24V/1A
			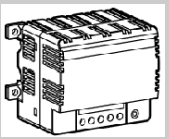	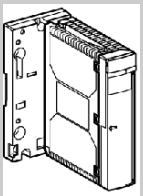
Secondary				
Output (2)		W	24	26(30)
Nominal output current (2)		On	1	1.1
Output voltage/accuracy at 25°C		V	24+/-5%	24+/-3%
Residual ripple (peak to peak) Maximum HF noise (peak to peak)		mV mV	240 240	150 240
Accepted length of micro-power outages (3)		ms	≤10 in AC ≤1 in DC	≤10 in AC ≤1 in DC
Protection against	Short circuits and overloads		continuous automatic reset	fallback to 0 and automatic reset after fault has disappeared
	Over-voltages	V	cuts off at U>36	cuts off at U>36
Parallelization			no	yes with power optimization
Serialization			no	yes
Power dissipation			8	18

(1) Values on initial power-up at 25°C. These elements are to be taken into account on start-up for the dimensioning of protection devices.

(2) Output power and current for an ambient temperature of 60°C. Input value in ( ) = output in a ventilated cabinet or within a temperature range of 0+40°C.

(3) A nominal voltage for a repetition period of 1Hz.

Electrical characteristics of process supply modules: TSX SUP 1021/1051/1101

Table of Characteristics

The following table describes the electrical characteristics of supply modules: TSX SUP 1021/1051/1101:

Process supply			TSX SUP 1021 24V/2A	TSX SUP 1051 24V/5A	TSX SUP 1101 24V/10A
			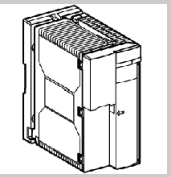	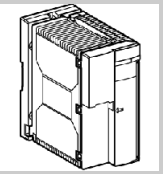	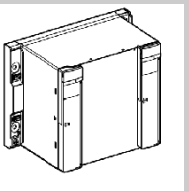
Primary					
Nominal input voltage		V	alternating 100..0.120/200..0.240		
Input limit voltage		V	alternating 85...132/170...264		
Network frequency		Hz	47...63/360...440		
Nominal input current (U=100V)		On	0.8	2.4	5
Maximum call current (1)	to 100 V	On	<30	51	75
	to 240 V	On	<30	51	51
Maximum It on trigger (1)	to 100 V	As	0.06	0.17	0.17
	to 240 V	As	0.03	0.17	0.17
Maximum I^2t on trigger (1)	to 100 V	A^2s	4	8.6	8.5
	to 240 V	A^2s	4	8.6	8.5
Power factor			0.6	0.52	0.5
Harmonic 3			10% (ϕ=0° and 180°)		
Full load efficiency		%	>75	>80	

Process supply			TSX SUP 1021 24V/2A	TSX SUP 1051 24V/5A	TSX SUP 1101 24V/10A
			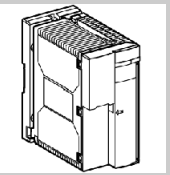	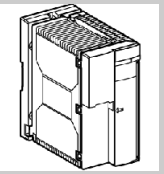	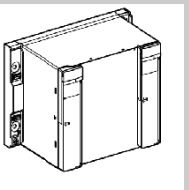
Secondary					
Output (2)		W	53(60)	120	240
Nominal output current (2)		On	2.2	5	10
Output voltage (0°C-60°c) V			24+/-3%		24+/-1%
Residual ripple (peak to peak)		mV	150	200	
Maximum HF noise (peak to peak) mV		mV	240		
Accepted length of micro-power outages (3)		ms	<=10		
Start-up time on resisting load		s	<1		
Protection against	Short circuits and overloads		fallback to 0 and automatic reset after fault has disappeared	current limit	
	Over-voltages	V	cuts off at U>36	cuts off at U>32	
Parallelization			yes with power optimization		
Serialization			yes		
Power dissipation			18	30	60

(1) Values on initial power-up at 25°C. These elements are to be taken into account on start-up for the dimensioning of protection devices.

(2) Output power and current for an ambient temperature of 60°C. Input value in ( ) = output in a ventilated cabinet or within a temperature range of 0+40°C.

(3) A nominal voltage for a repetition period of 1Hz.

Environmental characteristics

Table of characteristics

The following table gives the electrical characteristics of the power supplies: TBX SUP 10 and TSX SUP 10x:

Process power supply modules/units		TBX SUP 10	TBX SUP 1011/1021 TSX SUP 1051/1101
Connection to screw terminal blocks max. capacity per terminal	 mm^2	1 terminal per output 1 x 2.5	1011/1021/1051/A02:1 output terminal 1101 : terminals/output 2x1.5 with end or 1x2.5
Temperature: Storage Operation	 °C °C	-25 to +70 +5 to +55	-25 to +70 0 to +60 (TSX SUP 1011/1021/1051/1101
Relative humidity	%	5-95	
Cooling	%	By natural convection	
User safety		-	TBTS (EN 60950 and IEC1131-2)
Dielectric resistance: Primary/secondary Primary/ground Secondary/ground	 V rms V rms V rms	50/60Hz-1 mm 1500 1500 500	 3500 2200 500
Insulation resistance Primary/secondary Primary/ground	 Mega Ohms Mega Ohms	 >=100 >=100	
Leakage Current		I<=3.5 mA (EN 60950)	
Electrostatic discharge immunities		6 kV contact/8 kV air (IEC 1000-4-2 compliant)	
Fast electric transient		2 kV (series mode and common mode on input and output)	
Electromagnetic field influence		10 V/m, 80MHz to 1 GHz	
Rejected electromagnetic disturbances		(compliant with FCC 15-A and EN 55022 class A) Test conditions: nominal U and I, resistive load, cable: 1 meter horizontal, 0.8 meter vertical	

Process power supply modules/units		TBX SUP 10	TBX SUP 1011/1021 TSX SUP 1051/1101
Shock wave		Input: 4kV MC, 2kV MS Outputs: 2kV MF, 0.5 kV MS (IEC 1000-4-5 compliant)	
Vibration (1)		1 mm 3 Hz to 13.2 Hz 1g 57 Hz to 150 Hz (IEC 68-2-6 compliant, FC test)	
Level of protection		IP 20.5	IP 20.5, terminal block IP 21.5
MTBF at 40°C Service life at 50°C	H	100 000	
	H	30,000 (at nominal voltage and at 80% of nominal power)	

(1) compliant with IEC 68-2-6, FC test with grid- or plate-mounted module or unit.

Part VI
TSX RKY.. standard and extendable racks

Subject of this Part

This part concerns **TSX RKY.. standard and extendable racks**

What Is in This Part?

This part contains the following chapters:

Chapter	Chapter Name	Page
49	Introduction to TSX RKY .. standard/extendable racks.	357
50	TSX RKY.. standard and extendable racks : installation/mounting	367
51	TSX RKY.. standard and extendable racks: functions	375
52	TSX RKY Racks: accessories	391
53	X-Bus extension module	405
54	Ventilation module	423

Chapter 49
Introduction to TSX RKY .. standard/extendable racks.

Aim of this Chapter

This Chapter deals with:

- general points regarding TSX RKY racks,
- the physical description of these racks.

What Is in This Chapter?

This chapter contains the following topics:

Topic	Page
Standard and extendable TSX RKY racks	358
Standard rack: description	362
Extendable rack: description	364

Standard and extendable TSX RKY racks

General points

TSX RKY racks form the base unit of Premium PLCs.

These racks serve the following functions:

- **Mechanical function:**
  they are used to mount a set of modules for a PLC station (i.e. supply modules, processors, discrete/analog input/output modules, application-specific modules). They can be mounted in cabinets, machine frames or on panels.
- **Electrical function:**
  the racks have a built-in bus, called bus X, which distributes:
  - the required supply for each module on the same rack,
  - service signals and data for the whole PLC station when this is made up of several racks.

NOTE: two families of racks are offered in several modularities (4, 6, 8 and 12 positions):

- **standard racks**,
- **extendable racks**.

Standard racks

They are used to make up a PLC station which is limited to a single rack.

This table presents the different **standard racks**:

Designation	Illustration
TSX RKY 6	6-position rack 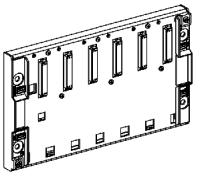
TSX RKY 8	8-position rack 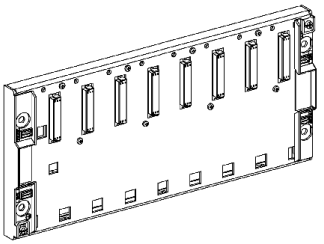
TSX RKY 12	12-position rack 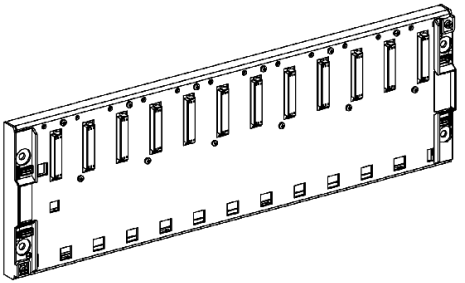

Extendable racks

They are used to make up a PLC station which can have:

- a maximum of 8 **TSX RKY 12 EX** racks,
- a maximum of 16 **TSX RKY 4EX/6EX/8EX** racks.

These racks are distributed on a bus called bus X, whose maximum length is limited to 100 meters.

A bus extension cable assures rack-to-rack bus continuity.

For applications which require a greater distance, a bus X extension module allows the extension of two bus X segments from the rack which is supporting the processor to a maximum distance of 250 meters.

This table presents the different **extendable racks**:

Designation	Illustration
TSX RKY 4EX	4-position rack 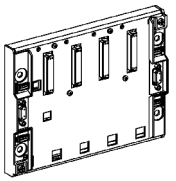
TSX RKY 6EX	6-position rack 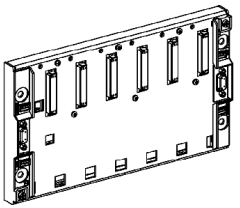

Designation	Illustration
TSX RKY 8EX	8-position rack 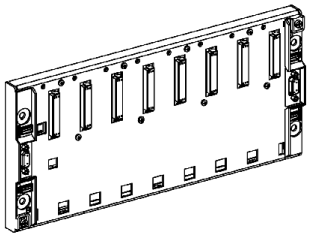
TSX RKY 12EX	12-position rack 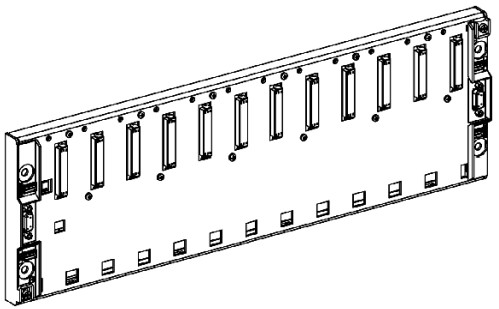

Standard rack: description

At a Glance

They are used to make up a PLC station which is limited to a single rack.

Illustration

Standard rack

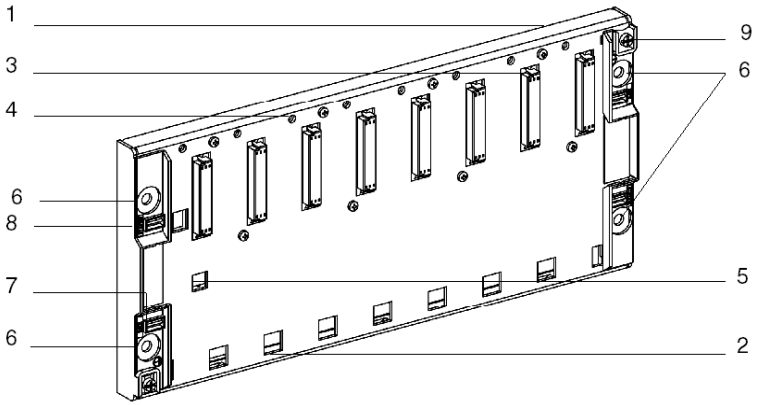

Description

The following table describes the different elements of a standard rack.

Number	Description
1	Metal sheet which: ● supports the bus X electronic card, and protects against **EMI** and **ESD** interference. ● supports the modules, ● maintains the rack's physical rigidity.
2	Holes to be used as anchor-points for module pins.
3	Female 48-pin 1/2 DIN connectors for connecting each module to the rack. When racks are delivered, these connectors are protected by covers, which must be removed before modules are installed. The connector on the farthest left marked PS is always dedicated to the rack supply module. The other connectors marked 00 to **..** are for receiving all the other module types.
4	Screw-holes for the module-mounting screws.
5	Guide-hole to assist in mounting the supply module. As supply modules have a projecting part on the back, this module cannot be mounted in any other position.
6	Holes for mounting the rack onto a support. These holes can take M6 screws.
7	Slot to hold the label for the rack address.
8	Slot to hold the label for the station network address.
9	Ground terminals for grounding the rack.

Extendable rack: description

At a Glance

They are used to form a PLC station which can be made up of several racks.

Illustration

Extendable rack

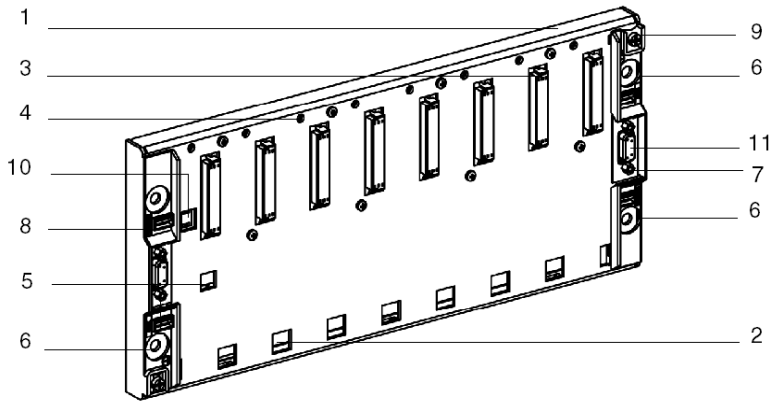

Description

The following table describes the different elements of an extendable rack.

Number	Description
1	Metal sheet which: ● supports the bus X electronic card, and protects against **EMI** and **ESD** interference. ● supports the modules, ● maintains the rack's physical rigidity.
2	Holes to be used as anchor-points for module pins.
3	Female 48-pin 1/2 DIN connectors for connecting each module to the rack. When racks are delivered, these connectors are protected by covers, which must be removed before modules are installed. The connector on the farthest left marked PS is always dedicated to the rack supply module. The other connectors marked 00 to **..** are for receiving all the other module types.
4	Screw-holes for the module-mounting screws.
5	Guide-hole to assist in mounting the supply module. As supply modules have a projecting part on the back, this module cannot be mounted in any other position.
6	Holes for mounting the rack onto a support. These holes can take M6 screws.
7	Slot to hold the label for the rack address.
8	Slot to hold the label for the station network address.
9	Ground terminals for grounding the rack.
10	Microswitch for coding the rack address (extendable racks only).
11	Female 9-pin SUBD connectors for extending the bus X to another rack (extendable rack only).

Chapter 50
TSX RKY.. standard and extendable racks : installation/mounting

Aim of this Chapter

This chapter deals with:

- rack installation,
- mounting these racks.

What Is in This Chapter?

This chapter contains the following topics:

Topic	Page
Installing Racks	368
mounting and fixing racks	371
Connection of the ground to a TSX RKY rack	373

Installing Racks

Introduction

When mounting **TSX RKY ••** racks, certain installation rules must to be followed.

Rack Installation Rules: Description

- **1** As the different modules (e.g. supply, processors, discrete I/O, etc.) are cooled by natural convection, it is **compulsory** in order to facilitate ventilation *(see page 423)* **to install the different racks horizontally and vertically**.
- **2** If several racks are installed in the same cabinet, you are advised to comply with the following advice on layout:
  - leave at least 150 mm between two racks placed on top of each other, to allow room for cable troughs and help air circulation.
  - you are advised to install the devices which generate heat (eg transformers, process supply, power contacts, etc.) above the racks,
  - leave at least 100 mm on each side of a rack to allow room for cabling and to help air circulation.

NOTE: If the hardware, other than the metal electrical cabinet, is installed in an area with emissions limits between 30 MHz and 1GHz (as per EN 55022), you are advised to use racks TSXRKY 8EX or TSXRKY6EX instead of TSXRKY8 and TSXRKY6.

Illustration

The following illustration shows the rules for installation

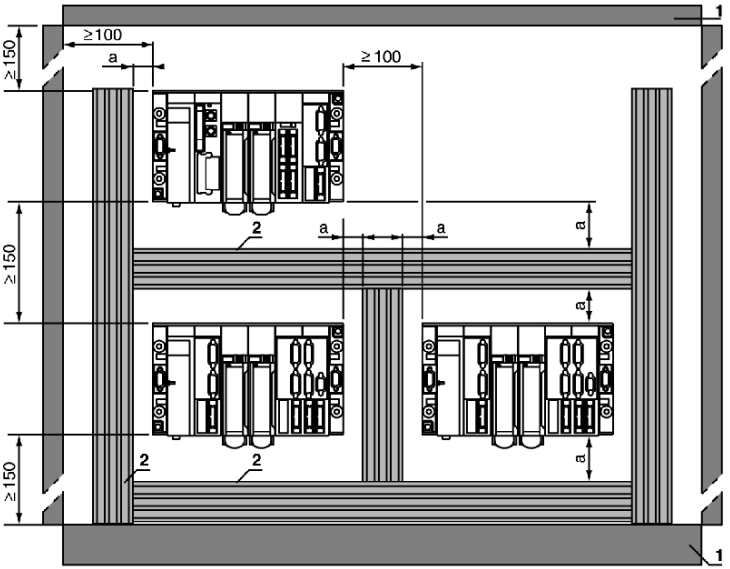

a Greater than or equal to **50 mm**.

1 Installation or casing.

2 Trough or cable tray.

Overall Rack Dimensions: Illustrations

The following illustrations show the overall dimensions of **TSX RKY ••** racks.

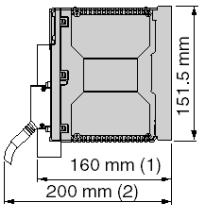

TSX RKY 4EX

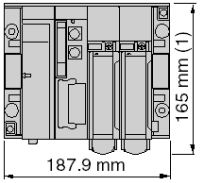

TSX RKY 6/6EX

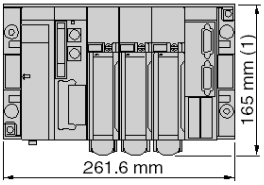

TSX RKY 8/8EX

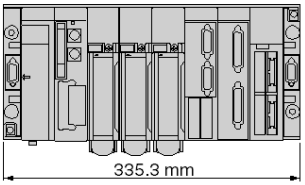

TSX RKY 12/12EX

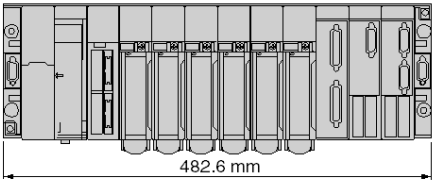

(**1**) With screw terminal block modules.

(**2**) Maximum depth for all types of modules and their associated connectors.

mounting and fixing racks

Introduction

TSX RKY•• and **TSX RKY••EX** racks can be mounted:

- on a 35 mm wide DIN mounting rail using M6x25 screws,
- on a Telequick mounting grid or on a panel.

The rules for installation *(see page 368)* are to be always followed, whatever the type of mounting.

Mounting on 35 mm wide DIN mounting rail

Fixing with four M6x25 screws + washers and AF1-CF56 ¼ turn sliding nuts.

Diagram illustrating the mounting

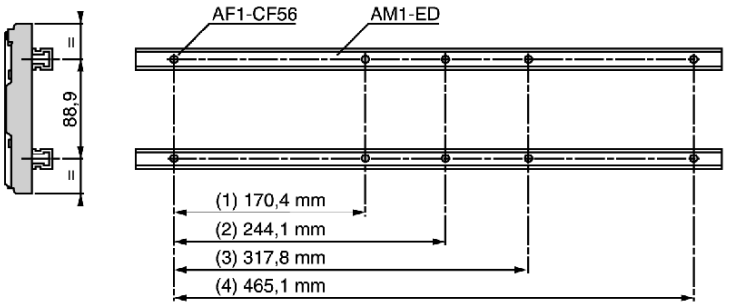

(**1**) TSX RKY 4EX

(**2**) TSX RKY6 and TSX RKY 6EX

(**3**) TSX RKY8 and TSX RKY 8EX

(**4**) TSX RKY 12 and TSX RKY 12EX

Mounting on a panel

Plan of screw-holes (dimensions in mm):

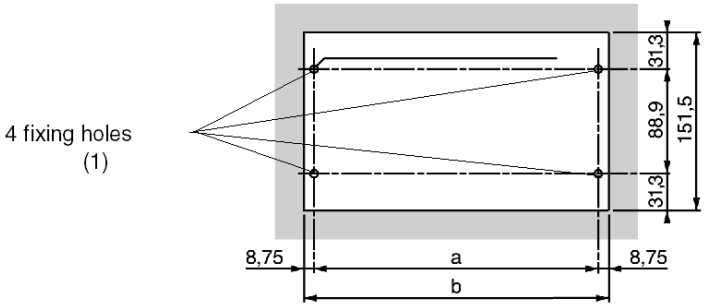

(1) the diameter of the fixing holes must be sufficient to take M6 screws.

(**1**) The diameter of the fixing holes must be such as to allow M6 screws.

a and **b** see table.

Mounting on an AM1-PA Telequick mounting grid

Fix the rack using four M6x25 screws + washers and AF1-EA6 clips nuts.

Plan of screw-holes (dimensions in mm):

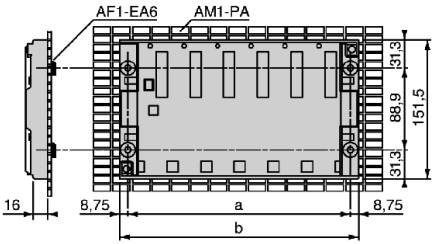

the following table presents mounting characteristics according to the different **TSX RKY** racks:

Racks	a	b	Depth
TSX RKY 4EX	170.4 mm	187.9 mm	16 mm
TSX RKY 6/6EX	244.1 mm	261.6 mm	16 mm
TSX RKY 8/8EX	317.8 mm	335.3 mm	16 mm
TSX RKY 12/12EX	465.1 mm	482.6 mm	16 mm

NOTE: Maximum tightening torque for fixing screws: 2.0.N.m.(1.6 Lb.-ft.)

Connection of the ground to a TSX RKY rack

Grounding racks

Functional grounding of the racks is provided by the back, which is made of metal.

This means that the PLCs will be guaranteed to conform to environmental norms; assuming, however, that the racks are fixed to a metal support that is correctly connected to ground. The different racks which can make up a TSX P57/TSX H57 PLC station must be mounted either on the same support or on different supports, as long as the latter are correctly interlinked.

⚠ DANGER

ELECTRIC SHOCK - IMPROPER GROUNDING

- Each rack's grounding terminal must be linked to the protective ground.
- Use a green/yellow wire with a minimum section of 2.5 mm (12 AWG) and with the shortest length possible.
- Maximum torque on the ground connection screw: 2.0 N.m (1.5 lb-ft).
- Install to confrom to all local and national codes.

Failure to follow these instructions will result in death or serious injury.

Illustration:

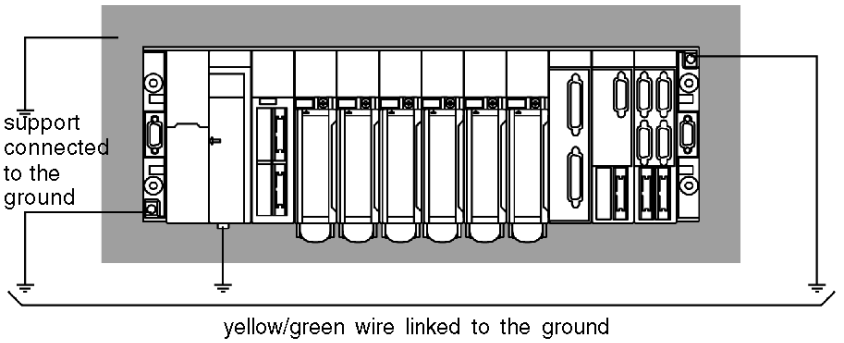

NOTE: The PLC's internal 0V is linked to the ground connection. The ground connection itself being linked to ground.

Chapter 51
TSX RKY.. standard and extendable racks: functions

Aim of this Chapter

This chapter describes the different functions of the **TSX RKY..** standard and extendable racks.

What Is in This Chapter?

This chapter contains the following topics:

Topic	Page
Building a PLC Station with Premium Processor	376
Building a PLC Station with an Atrium Processor	379
PLC station rack addressing	382
Principle of addressing two racks at the same address	384
Module addresses	385
Installation of the power supply units, processors and other modules	387

Building a PLC Station with Premium Processor

Introduction

It is possible to build a PLC station with a TSX P57/TSX H57 processor using:

- Standard racks *(see page 359)*: TSX RKY 6/8/12,
- Extendable racks *(see page 360)*: TSX RKY 4EX/6EX/8EX/12EX.

Building Using Standard Racks

Standard racks can be used to build a TSX P57/TSX H57 PLC station limited to a single rack.

In both versions, alternating configuration **TSX P57 CA 0244** and direct configuration **TSX P57 CD 0244**, the rack delivered in this configuration is a standard TSX RKY 6 rack.

Building Using Extendable Racks: TSX RKY 4EX/6EX/8EX/12EX

Extendable racks can be used to build a PLC station that contains a maximum of:

Station	Number of racks
For a TSX 57 0244 station	• 1 TSX RKY 12EX rack, • 1 TSX RKY 4EX/6EX/8EX rack.
For a TSX 57-104\1634\154 station	• 2 TSX RKY 12EX racks, • 4 TSX RKY 4EX/6EX/8EX racks.
For a TSX 57-204\254\2634\2834\304\354\3634\454\4634\554\5634\6634 and a TSX H57 24M/44M station	• 8 TSX RKY 12EX racks, • 16 TSX RKY 4EX/6EX/8EX racks.

Diagram

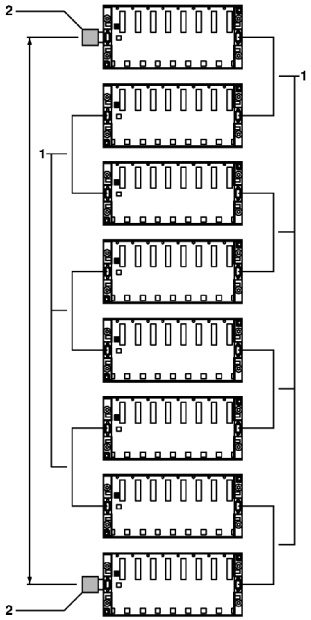

- **(1)** The same station can contain 4, 6, 8 and 12 position racks that are interconnected by X-Bus extension cables *(see page 392)* (labeled 1).
- **(2)** The X-Bus must have a line termination *(see page 396)* (labeled 2) fitted at each end.

NOTE: The cumulative length of all the TSX CBY..0K cables used in a PLC station must never exceed 100 meters. For applications which require a distance of more than 100 meters between racks, an extension module allows the remoting of two X-Bus segments from the rack supporting the processor, to a maximum distance of 250 meters, each X-Bus segment having a maximum distance of 100 meters.

X-Bus Extension Cable

Racks are connected by means of TSX CBY..0K X-Bus extension cables which are connected to the 9-pin SUB D connectors situated to the right and the left of each extendable rack.

NOTE: If an X-Bus cable or termination line is disconnected or interrupted then some racks will show a fault. Having correctly reconnected the racks, it is necessary to switch off and then switch on all the racks.

NOTE: As the idea of in and out does not exist on 9-pin SUB D connectors, a cable can enter or leave using either the right or left-hand connector.

Line Termination

The two extendable racks situated at the ends of the chain **must always** be fitted with a TSX TL YEX line termination on the unused 9-pin SUB D connectors, labeled **A/** and **/B**.

Building a PLC Station with an Atrium Processor

Introduction

It is possible to build a PLC station with an Atrium processor using extendable racks: TSX RKY 4EX/6EX/8EX/12EX.

Building Using Extendable Racks

Extendable racks can be used to build a PLC station that contains a maximum of:

Station	Number of racks
For a TSX PCI 57 204 station	● 8 TSX RKY 12EX racks, ● 16 TSX RKY 4EX/6EX/8EX racks.
For a TSX PCI 57 354 station	● 8 TSX RKY 12EX racks, ● 16 TSX RKY 4EX/6EX/8EX racks.

Diagram:

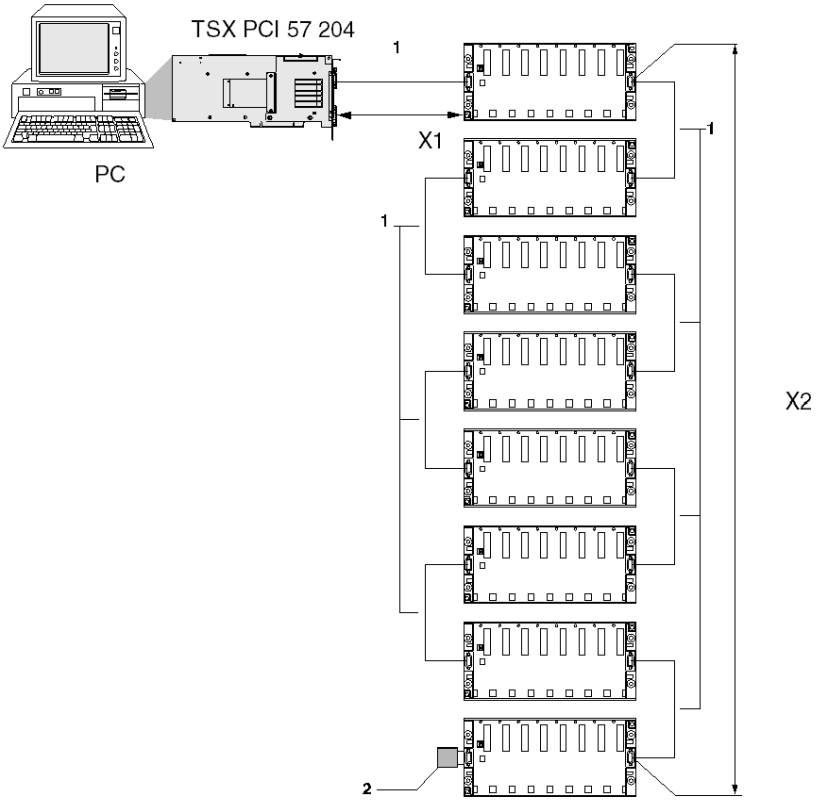

- **(1)** The same station can contain 4, 6, 8 and 12 position racks that are interconnected by X-Bus extension cables *(see page 392)* (labeled 1).
- **(2)** The X-Bus must have a line termination *(see page 396)* (labeled 2) fitted at each end.

NOTE: The cumulative length (X1+X2) of all the TSX CBY..0K cables used in a PLC station must never exceed 100 meters. For applications which require a distance of more than 100 meters between racks, an extension module allows the extension of two X-Bus segments from the rack which is supporting the Atrium processor virtually, to a maximum distance of 250 meters, each X-Bus segment having a maximum distance of 100 meters.

X-Bus Extension Cable

Racks are connected by means of TSX CBY••0K X-Bus extension cables which are connected to the 9-pin SUB D connectors situated on the right and left of each extendable rack and at the top of the front panel of the processor.

NOTE: If an X-Bus cable or termination line is disconnected or interrupted then some racks will show a fault. Having correctly reconnected the racks, it is necessary to switch off and then switch on all the racks.

NOTE: As the idea of in and out does not exist on 9-pin SUB D connectors, a cable can enter or leave using either the right or left-hand connector.

Line Termination

At manufacture, the equivalent of the line terminator **/A** is built into the processor and, due to this, the processor forms a termination of the X-Bus. The extendable rack situated at the ends of the chain **must always** be fitted with a TSX TLY line termination on the unused 9-pin SUB D connector, labeled **B/**.

Remark Concerning Atrium Processor

By default, the Atrium processor is equipped to be mounted as the start of the X-Bus, and thus, the line termination /A is built into it in the form of a removable daughterboard.

If an application requires the integration of the processor within an X-Bus cable segment, a mechanical kit is supplied with the processor to satisfy this requirement.

This mechanical kit is in the form of:

- A daughterboard which is mounted in place of the line termination A/,
- A shield equipped with a 9-pin SUB D connector for connecting an X-Bus TSX CBY••0K cable and a cable for connection to the daughterboard.

PLC station rack addressing

At a Glance

Two cases can occur for PLC station rack addressing:

- PLC station built from a standard rack *(see page 359)*,
- PLC station built from extendable racks *(see page 360)*.

Station built from a standard rack

The station is always limited to a single rack, thus the rack address is implicit and has a value of 0 (no microswitches).

Station built from extendable racks

For each station rack an address must be assigned. This address is coded using 4 microswitches found on the rack.

Microswitches 1 to 3 are used to code the address of the rack on the X-Bus (0 to 7), microswitch 4 is used to code two racks (4, 6 or 8 positions) on the same address. This latter functionality is managed by the programming software.

Diagram showing the microswitch

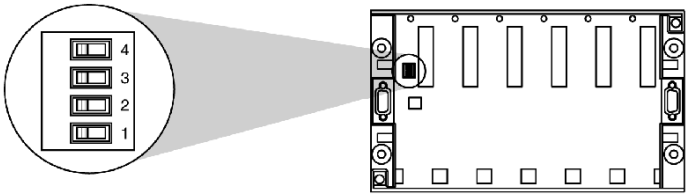

Table of rack addresses

Rack addresses		0	1	2	3	4	5	6	7
Position of the micro-switches	4								
	3								
	2								
	1								
		ON OFF	ON OFF	ON OFF	ON OFF	ON OFF	ON OFF	ON OFF	ON OFF

NOTE: On delivery, microswitches 1, 2 and 3 are in the ON position (address 0).

Assigning addresses to different racks

Address 0: this address is always assigned to the rack which supports:

- the TSX P57/TSX H57 processor physically,
- the TSX PCI 57 processor virtually.

This rack can be located in any position in the chain.

Addresses 1 to 7: they can be assigned in any order to all the other extendable racks in the station.

NOTE: the rack address coding must be done before mounting the power supply module.

NOTE: If two or more racks are positioned at the same address (other than address 0), then the racks concerned as well as all their modules show a fault. After fixing the addresses, it is necessary to switch off and then switch on the racks concerned.

This note only applies to racks with references **TSX RKY..EX**

If two or more racks are at address 0, the rack supporting the processor does not show a fault.

Principle of addressing two racks at the same address

Illustration

The following diagram shows the principle of addressing two racks at the same address.

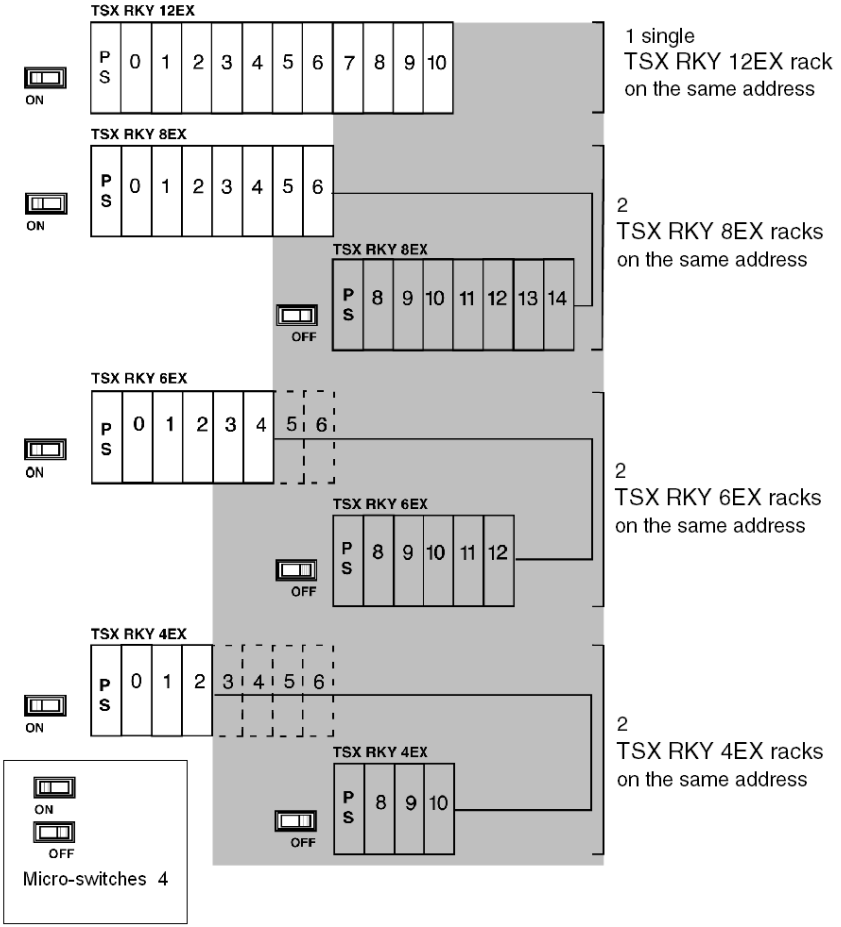

NOTE:

- TSX RKY 12EX racks cannot have a second rack at the same address.
- TSX RKY 8EX/6EX/4EX racks can be intermixed.
- Two TSX RKY 8EX/6EX/4EX racks at the same address will not necessarily be linked one after the other. The order of physical distribution is not important.

Module addresses

At a Glance

For all standard and extendable racks, the module address is geographical and will depend upon the position of the module on the rack. The address of each position is indicated under each connector - the connector with address PS is always dedicated to the rack power supply.

Several addressing cases are possible:

- module addressing on standard racks *(see page 359)*,
- module addressing on extendable racks *(see page 360)*.

Module addressing on standard racks

- for a TSX RKY 6: use addresses 00 to 04,
- for a TSX RKY 8: use addresses 00 to 06,
- for a TSX RKY 12: use addresses 00 to 10.

Module addressing on extendable racks

The address of a module will depend upon the position of microswitch 4:

- microswitch 4 in the ON position, the modules will have addresses (00 to x), according to the rack type,
- microswitch 4 in the OFF position, the modules will have addresses (08 to y), according to the rack type. This functionality is only managed by the programming software.

The following table shows the addresses in relation to the position of microswitch 4:

Position of microswitch 4	ON	OFF
TSX RKY 4EX racks	00 to 02	08 to 10
TSX RKY 6EX racks	00 to 04	08 to 12
TSX RKY 8EX racks	00 to 06	08 to 14
TSX RKY 12EX racks	00 to 10	unusable

Illustration

Diagram showing the module addresses on rack TSX RKY 8EX

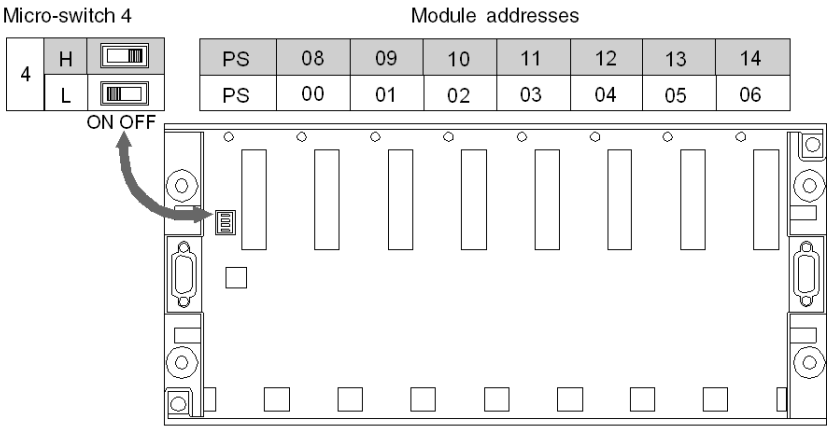

NOTE: the grayed-out addresses are only accessible from the programming software

Installation of the power supply units, processors and other modules

Installation on standard or extendable rack at address 0 with the Premium processor

The rack address 0 has to receive a power supply module and the processor module. As Premium PLCs have two types of power supply (standard and double format), the position of the processor will depend on the type of power supply used.

Using a standard format power supply module

- the power supply module automatically occupies position PS,
- the single format processor module is installed in position 00 (preferential position) or in position 01, in this first case the position 00 is not available.

Illustrative diagram:

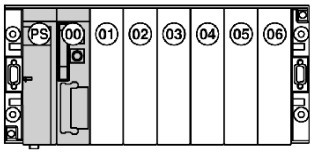

- the double format processor module is installed in positions 00 and 01 (preferential positions) or in positions 01 and 02, in this last case, the position 00 is not available,
- the other modules are installed from position 01, 02 or 03 according to the installation of the processor.

Illustrative diagram

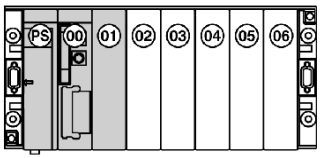

Using a double format power supply module:

- the power supply module automatically occupies position PS,
- the single format processor module must be installed in position 01.

Illustrative diagram:

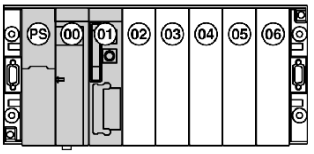

- the double format processor module is installed in positions 01 and 02,
- the other modules are installed from position 02 or 03 according to the type of processor.

Illustrative diagram:

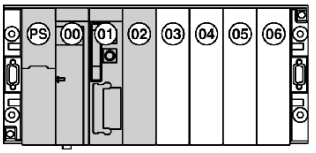

Installation on standard or extendable rack at address 0 with the Atrium processor

The Atrium processor built-into the PC virtually occupies one position on the rack at address 0; this virtual position must be unoccupied. As Premium PLCs have two types of power supply (standard and double format), the unoccupied position of the processor will depend on the type of power supply used.

Using a standard format power supply module

- the power supply module automatically occupies position PS,
- position 00, the virtual slot for the processor, must be unoccupied,
- the other modules are installed starting at position 01.

Illustrative Diagram:

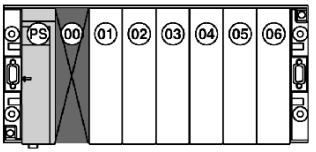

Using a double format power supply module:

- the power supply module automatically occupies positions PS and 00,
- position 01, the virtual slot for the processor, must be unoccupied,
- the other modules are installed starting from position 02.

Illustrative diagram:

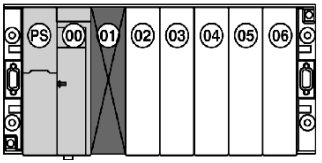

Installation on extendable rack at address 1 to 7 regardless of the type of processor

Each rack must have either a standard format or double format power supply module.

Using a standard format power supply module

- the power supply module automatically occupies position PS,
- the other modules are installed starting at position 00.

Illustrative diagram:

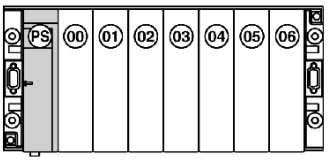

Using a double format power supply module:

- the power supply module automatically occupies position PS,
- the other modules are installed starting at position 01.

Illustrative diagram:

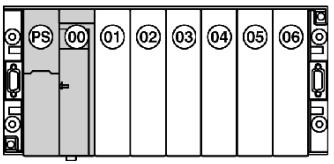

Chapter 52
TSX RKY Racks: accessories

Aim of this Chapter

The aim of this chapter is to show the different accessories which go with **TSX RKY..** racks..

What Is in This Chapter?

This chapter contains the following topics:

Topic	Page
TSX CBY..0K X-Bus extension cable	392
TSX CBY 1000 bus X extension cable	394
Line terminator TSX TLYEX	396
Positioning of line terminators on a station using a Premium processor	397
Positioning of line termination on a station using an Atrium processor	398
TSX RKA 02 protective cover for unoccupied positions	399
Labeling	400
Compatibility with the Installed Base	402

TSX CBY..0K X-Bus extension cable

At a Glance

These cables of predetermined length are used to chain **TSX RKY..EX** extendable racks and to transport the different X-Bus signals.

When an Atrium processor is used, they can also be used to connect the PC's built-in processor and the first rack in the station.

They are equipped at each end with male 9-pin SUB D connectors, which connect to the female 9-pin SUB D connector on the extendable rack or the Atrium processor.

Station with TSX processor which can be integrated in the rack

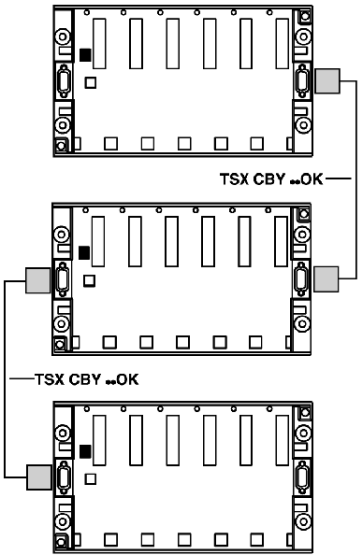

Station with Atrium processor which can be integrated in a PC

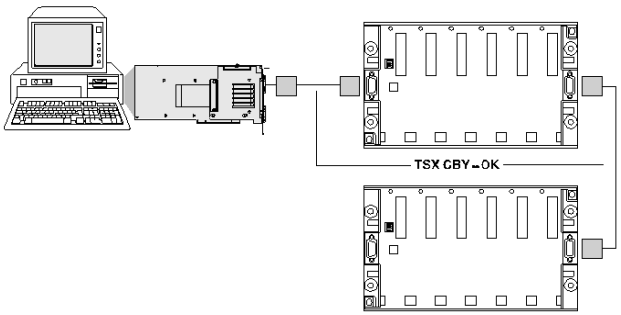

Important:

The cumulative length of all the cables used in a PLC station is limited to 100 meters.

⚠ CAUTION
EQUIPMENT DAMAGE Switch off all station's elements (racks, PC, etc...) before insertion or extraction of a TSX CBY0K cable. **Failure to follow these instructions can result in injury or equipment damage.**

Different cable types available

To suit different users, several cable lengths are available.

Summary table of different cable types

Product reference	Lengths
TSX CBY 010K (II ≥ 02)	1 meter
TSX CBY 030K (II ≥ 02)	3 meters
TSX CBY 050K (II ≥ 02)	5 meters
TSX CBY 120K (II ≥ 02)	12 meters
TSX CBY 180K (II ≥ 02)	18 meters
TSX CBY 280K (II ≥ 02)	28 meters
TSX CBY 380K (II ≥ 02)	38 meters
TSX CBY 500K (II ≥ 02)	50 meters
TSX CBY 720K (II ≥ 02)	72 meters
TSX CBY 1000K (II ≥ 02)	100 meters

TSX CBY 1000 bus X extension cable

At a Glance

For bus X lengths less than 100 meters but different from those available as cables with connectors, **always** use a **TSX CBY 1000** cable.

This cable must have TSX CBY K9 connectors fitted at both ends by the user. The assembly procedure is described in the instructions supplied with the cable and the connectors.

For implementation of these cables the following elements are required:

- 1 TSX CBY 1000 cable,
- 1 set of two TSX CBY K9 9-pin connectors,
- 1 TSX CBY ACC10 kit.

1 TSX CBY 1000 cable,

This cable must include one 100-meter reel of cable and two testers to check the cable once the various connections have been made.

Illustration:

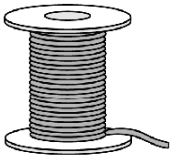

Reel

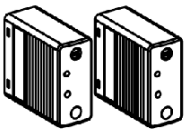

Testers

1 set of two TSX CBY K9 9-pin connectors

For each connector this set must include:

- 1 connector body,
- 1 set of contacts,
- 1 internal screening cap,
- 1 external screening cap,
- 1 ferrule,
- 1 plastic cover with 2 fixing screws.

Illustration:

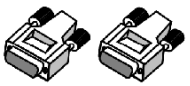

1 TSX CBY ACC10 kit

This kit includes:

- 2 crimping tools,
- a contact extractor to be used in case of errors.

Illustration:

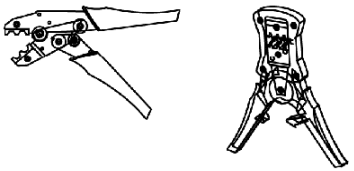

Crimping tools

Line terminator TSX TLYEX

Introduction

When extendable racks *(see page 375)* are used, the bus X must be fitted with a line terminator at each end.

At a Glance

A line terminator is made up of a 9-pin SUB D connector and a cover containing the adaptation components. It is mounted on the 9-pin SUB D 9 connector belonging to the extendable rack at the end of the line.

Illustration:

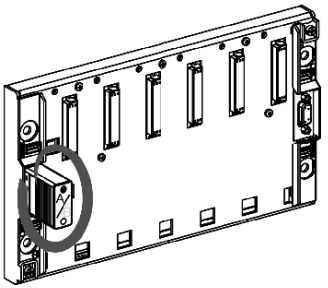

TSX TLYEX line terminations are sold in twos and marked **A/** and **/B**. The bus must be fitted with a terminator **A/** at one end and a terminator **/B** at the other end in no predefined *(see page 397)* order.

⚠ CAUTION
EQUIPMENT DAMAGE
Switch off all station's elements racks before insertion or extraction of a line terminator.
Failure to follow these instructions can result in injury or equipment damage.

Positioning of line terminators on a station using a Premium processor

Positioning on a PLC station containing several TSX RKY..EX extendable racks

Diagram showing the principle:

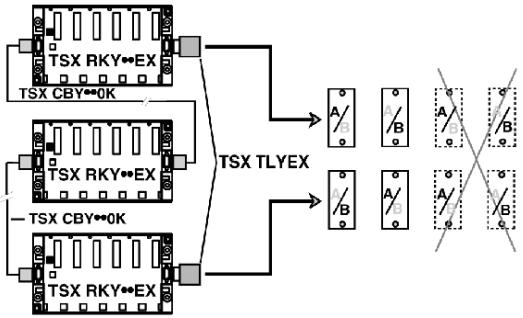

Positioning on a PLC station containing a single TSX RKY..EX extendable rack

Diagram showing the principle:

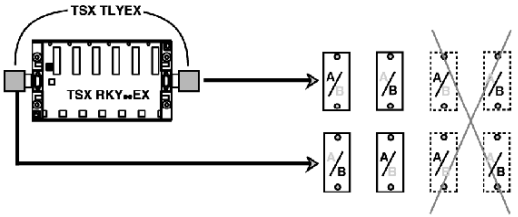

NOTE: When a single extendable rack is used, a line terminator must always be mounted on each of the rack's 9-pin SUB D connectors.

Positioning of line termination on a station using an Atrium processor

At a Glance

At manufacture, the equivalent of the line terminator **/A** is built into the processor and, due to this, the processor forms a termination of the X-Bus. The extendable rack located at the end of the chain therefore must always have a **TSX TLY EX** line terminator labeled **/B** fitted on its unused 9-pin SUB D connector.

Principle diagram:

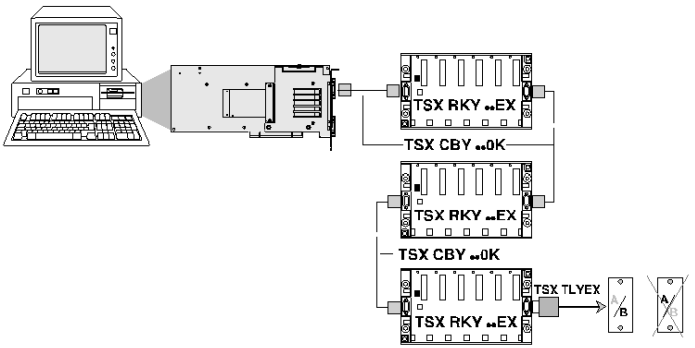

Special case.

When no devices are connected to the X Bus, the **TSX TLYEX** line terminator /B must be installed on the X Bus connector of the **Atrium** processor.

Illustration:

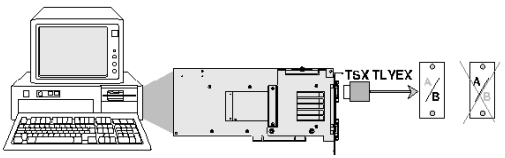

TSX RKA 02 protective cover for unoccupied positions

At a Glance

If a position on a rack is unoccupied, it is advisable to mount a **TSX RKA 02** cover designed for this in this position.

This cover is mounted and fixed on the rack like a module with a reduced depth.

TSX RKA 02 covers are sold in indivisible quantities of five.

Illustration

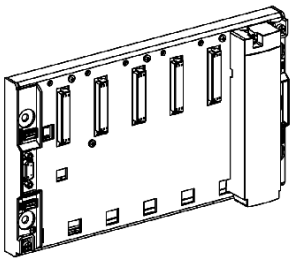

Labeling

Labeling of module positions on the rack

When the module is in place on the rack, it masks the address of the position, which is printed on the rack.

Due to this and in order to be able to identify the module's position quickly, each rack is delivered with a page of sticky labels which allow you to label the position of each module.

This sticky label is stuck on the upper part of the module when it is in place on the rack.

Illustration: example of processor module labeling

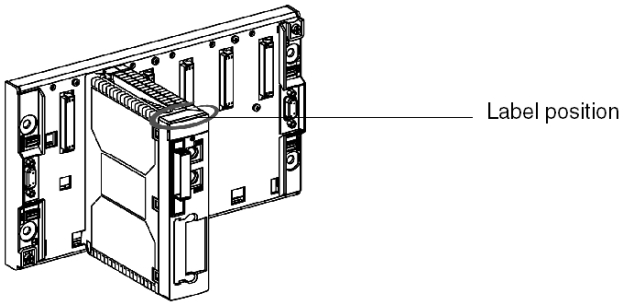

Page of labels:

PS	00	01	020	03	04	05	06
07	08	09	10	11	12	13	14

Rack labeling

Each rack is delivered with a set of snap out labels so that for each rack you can label:

- the address of the rack in the station,
- the network address of the station when the station is connected to a communication network.

Therefore each rack has two slots where these addresses can be placed.

Illustration:

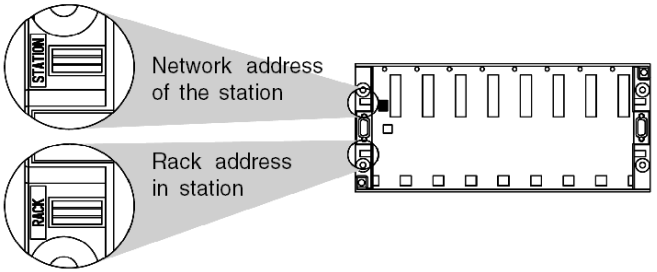

Compatibility with the Installed Base

Summary Table

This table shows the compatibility with the installed base in relation to old and new references:

			Configuration already in place with			
			Previous references			New references
			TSX RKY..E TSX CBY..OK (•• 01) TSX TLY (•• 01)	TSX RKY..E TSX CBY..OK (•• 01) TSX TLY A+B (•• 03)	TSX RKY..E TSX CBY..OK (•• 02) TSX CBY 1000 TSX TLY A+B (•• 03)	TSX RKY..EX TSX CBY..OK (•• 02) TSX CBY 1000 TSX TLYEX A/+/B
Development of the configuration	Previous references	2 terminators TSX TLY (•• 01)	YES	NO (1)	NO (1)	NO (3)
		TSX CBY..OK cables (•• 01)	YES	YES	NO (2)	NO (4)
		Terminators TSX TLY A+B (•• 03)	YES	YES	YES	NO (3)
		TSX RKY..E rack(s)	YES	YES	YES	NO (5)
	New references	TSX CBY..OK (•• 02) or CBY 1000 cable(s)	YES	YES	YES	YES
		TSX RKY..EX rack(s)	NO (6)	YES	YES	YES
		Terminators TSX TLYEX A/+/B	YES	YES	YES	YES

Details of incompatibilities:

1. Operation correct but incorrect detection of bus X break. Behavior of outputs not guaranteed for bus break.
2. Correct operation for 50 instead of 100 meters. Correct detection of bus X break.
3. Incorrect bus adaptation, no guarantee of operation. The TLY and TLY A/B adapt the signals in relation to 0V (wire in the bus X cable). The TLY EX A/B adapt the signals in relation to the shielding.
4. Incorrect detection of duplicate address.
5. Operation correct but no detection of duplicate address.
6. Incorrect bus adaptation. TLY EX plugs required for correct operation when a TSXRKY..EX. is used in the configuration.

NOTE: In a PLC station, the TSX TLY line terminator torque must be of the same index.
•• corresponds to the product version.

Chapter 53
X-Bus extension module

Aim of this Chapter

The aim of this Chapter is to introduce the X-Bus extension module and its installation.

What Is in This Chapter?

This chapter contains the following topics:

Topic	Page
Bus X extension module: introduction	406
Rack Extender Module: physical description	408
X-Bus extension module: installation	409
Bus X extension module: configuration	412
Bus X extension module: maximum distances according to module type	413
Bus X extension modules: connections	417
X-Bus extension module: diagnostics	419
Topology of a PLC station with extension module	420
Managing a power supply module fitted with an bus X extension module	422

Bus X extension module: introduction

General

The Premium PLC bus X makes it possible to connect 8 racks with 12 positions (TSX RKY 12EX) or 16 racks with 4, 6 or 8 positions (TSX RKY 4EX/6EX/8EX), distributed along a maximum length of 100 meters.

If applications require greater distances between racks, the bus X extension module (TSX REY 200) makes it possible to greatly increase this distance whilst maintaining the characteristics and performance which are inherent in a PLC station which is only made up of a single bus X segment without extension module.

The system consists of:

- **an bus X extension module** (TSX REY 200) called "Master" located on the rack with address 0 (rack supporting the processor) and on the main bus X segment. This module has two channels which allow the two bus X segments to be extended up to a maximum distance of 250 meters,
- **one or two TSX REY 200 modules** called "Slave", each located on a rack on the extended bus segments,
- each of the slave modules is connected to the master module by a **TSX CBRY 2500** cable fitted with TSX CBRY K5 connectors.

Example of topology

Illustration:

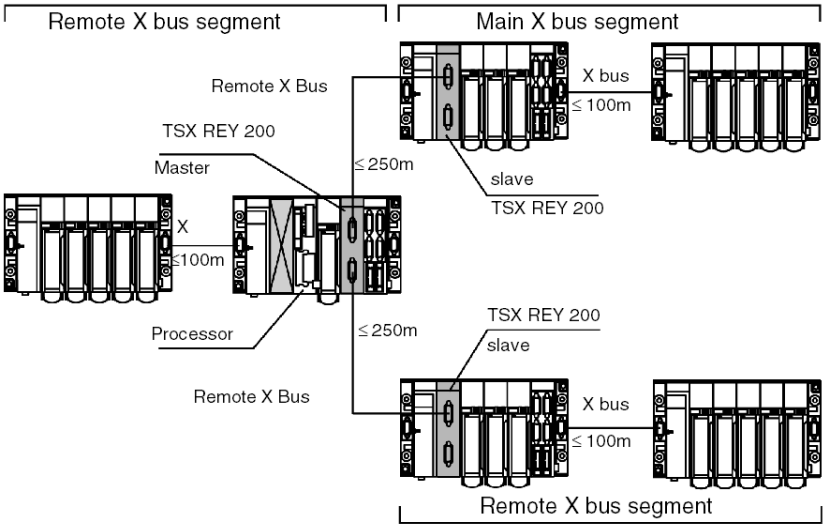

Module consumption

Consumption on 5VDC power supply: 500 mA

Dissipated power: 2.5 W.

Rack Extender Module: physical description

Illustration

Descriptive diagram:

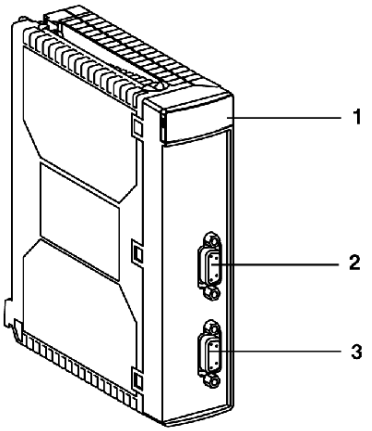

Table of labels

Description table according to number:

Label	Description
1	Display block made up of 6 LEDs: ● **RUN** LED: indicates the operating status of the module, ● **ERR** LED: indicates an error within the module, ● **I/O** LED: indicates an error external to the module, ● **MST** LED: indicates the status of the master or slave function of the module, ● **CH0** LED: indicates the operating status of channel 0, ● **CH1** LED: indicates the operating status of channel 1,
2	Connector for linking channel 0 of the module.
3	Connector for linking channel 1 of the module.

X-Bus extension module: installation

Introduction

Several different cases may arise when installing an X-Bus extension module:

- installation of a master module on the Premium station,
- installation of a master module on the Atrium station,
- installation of a slave module.

Installation of a Master Module on the Premium Station

The master module must be installed:

- on the rack which supports the processor (rack with address 00), this rack being located on the main X-Bus segment,
- in a free position in this rack.

The table below indicates the various scenarios according to the format of the power supply and the processor:

Scenario	Illustration
Rack with address 0 with single format power supply and processor: ● power supply in position PS, ● processor must be in position 01, ● TSX REY 200 module in one of the available positions in the rack (position 00 is forbidden).	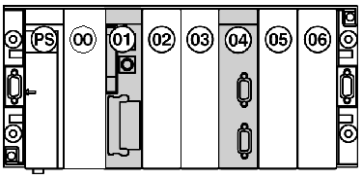
Rack with address 0 with double format power supply module and single format processor: ● power supply in positions PS and 00, ● processor must be in position 01, ● TSX REY 200 module in one of the available positions in the rack.	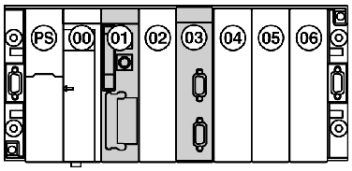

Scenario	Illustration
Address rack 0 with single format power supply module and double format processor: ● power supply in position PS, ● processor must be in positions 01 and 02, ● TSX REY 200 module in one of the available positions in the rack (position 00 is forbidden).	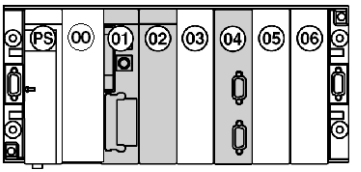
Rack with address 0 with double format power supply module and processor: ● power supply in positions PS and 00, ● processor must be in positions 01 and 02, ● TSX REY 200 module in one of the available positions in the rack.	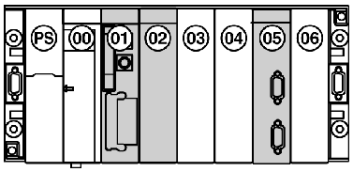

Installation of a Master Module on the Atrium Station,

As with a Premium station, the master module must be installed:

- on the rack which supports the processor virtually (rack with address 0), this rack being located on the main X-Bus segment,
- in any position on this rack apart from the position dedicated to the power supply module and that which is virtually occupied by the processor (possibility of using slot 00 for a single format power supply).

Constraint:

The virtual position of the processor (unoccupied position) must always be position 01.

The table below indicates the various scenarios according to the format of the power supply and the processor:

Scenario	Illustration
Rack with address 0 with single format power supply: ● power supply in position PS, ● virtual position of the processor must be position 01 (position always unoccupied), ● TSX REY 200 module in one of the available positions in the rack (position 00 is forbidden).	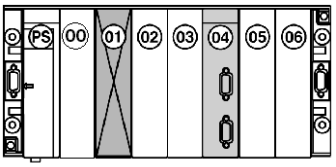
Rack with address 0 with double format power supply module: ● power supply in position PS, ● virtual position of the processor must be position 01 (position always unoccupied), ● TSX REY 200 module in one of the available positions in the rack.	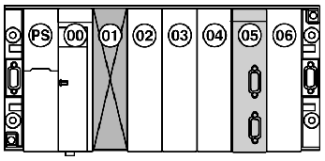

Installation of a Slave Module

The slave module can be installed on one of the racks of the bus extension segment and in any position on this rack apart from the one which is dedicated to the power supply module.

The table below indicates the various scenarios according to the format of the power supply and the processor:

Scenario	Illustration
Rack with single format power supply: ● power supply in position PS, ● TSX REY 200 module in one of the available positions in the rack (position 00 is forbidden).	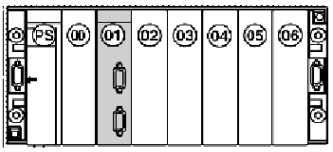
Rack with double format power supply: ● power supply in positions PS and 00, ● TSX REY 200 module in one of the available positions in the rack.	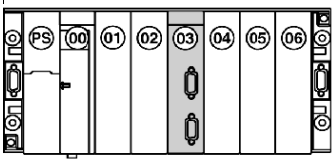

Bus X extension module: configuration

General points

The configuration of the module as a master or slave is automatic:

- if the module is installed on the rack with address 0, it will automatically be declared as master,
- if the module is installed on a rack with an address other than 0, it will automatically be declared as slave.

NOTE: If 2 racks are declared at address 0, the master module **must** be located on the rack supporting the "low" module addresses, as indicated in the figure below.
"Low" module addresses:

- addresses 0 to 6 on TSX RKY 8EX,
- addresses 0 to 4 on TSX RKY 6EX,
- addresses 0 to 2 on rack TSX RKY 4EX,

Illustration

Example: 2 TSX RKY 8EX racks at address 0.

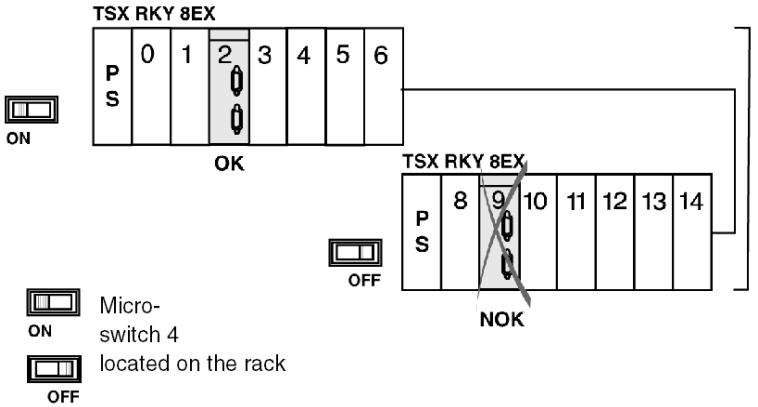

NOTE: If two racks are declared at address 0, the rack supporting the "high" address modules cannot receive a slave extension module.
"High" address modules:

- addresses 8 to 14 on rack TSX RKY 8EX,
- addresses 8 to 12 on rack TSX RKY 6EX,
- addresses 8 to 10 on rack TSX RKY 4EX.

Bus X extension module: maximum distances according to module type

General points

The figure below summarizes the maximum distances authorized for the different bus X segments and bus X extensions:

- for each bus X segment (X1, X2 or X3): maximum length 100 meters,
- for each bus X extension (XD1 or XD2): maximum length 250 meters,

Illustration:

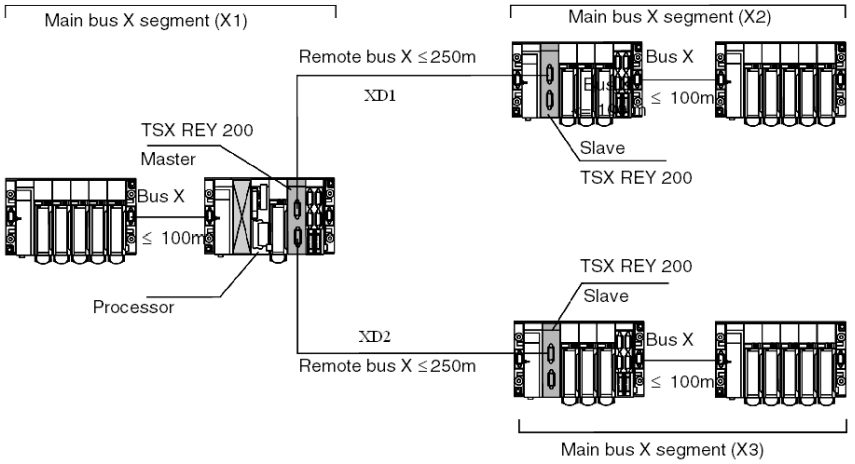

Taking this into account, the maximum distance possible between the processor and the remote modules is 350 meters.

This distance of 350 meters is only possible for single discrete input/output modules. The following illustrations indicate the restrictions in relation to module type.

NOTE: Extension is prohibited for communication modules TSX SCY •••/TSX ETY•••/TSX IBY •••/TSX PBY •••. These modules must be located on the main segment of the bus X1

Safety and single discrete I/O modules

Illustration:

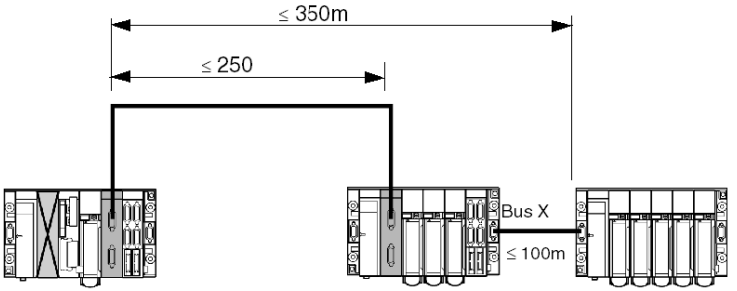

Single discrete I/O modules:
TSX DEY.../TSX DSY...
and TSX PAY… safety modules
Exception: TSX DEY 16FK

Mixed discrete I/O, analog, application-specific and bus sensor/actuator modules

Illustration:

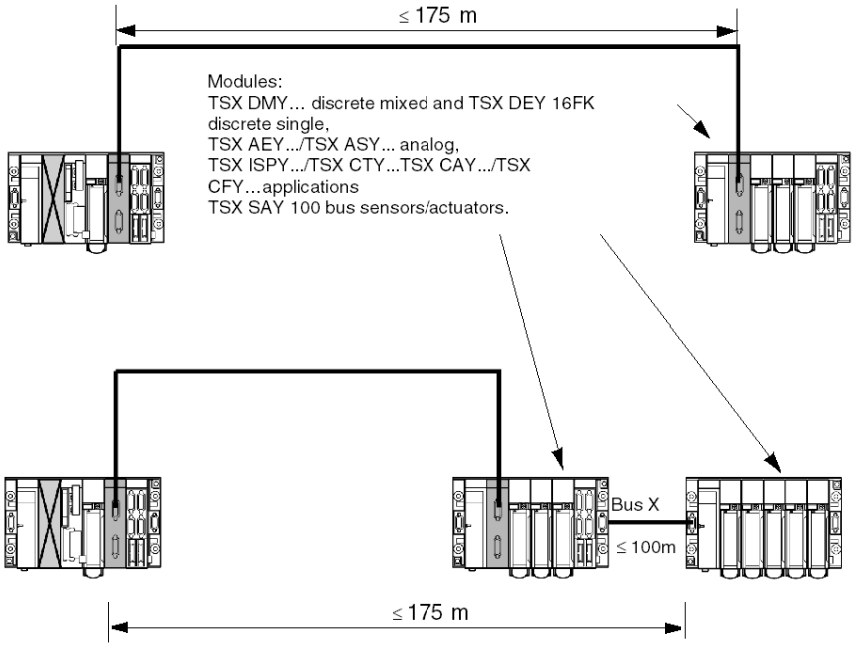

NOTE: for the following modules:

- TSX DEY 16 FK with PV index≥ 06,
- TSX DMY 28FK / 28RFK,
- TSX AEY 810/1614,
- TSX ASY 410 with PV index ≥ 11,
- TSX ASY 800,
- TSX CTY 2C
- TSX CAY 22/42/33,

maximum distance authorized (extension cable and bus X cable length): 225 meters.

Communication modules

⚠ CAUTION

UNEXPECTED APPLICATION BEHAVIOR

The following modules must be located on the main bus X segment.

- TSX SCY... communication
- TSX ETY... network
- TSX IBY... /TSX PBY field bus

Do not locate them on bus X extensions

Failure to follow these instructions can result in injury or equipment damage.

Illustration:

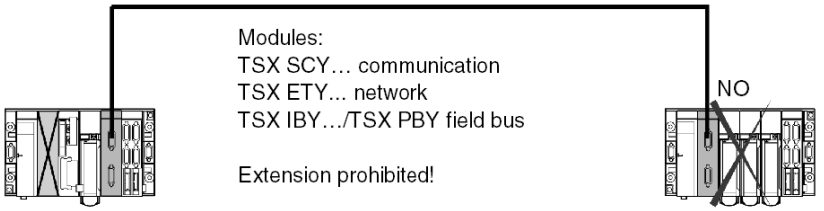

Bus X extension modules: connections

General points

To extend the bus X, you **must** use:

- the kit TSX CBRY 2500 made up of a reel of cable, 250 meters in length,
- the set of connectors TSX CBRY K5.

You must fit the cable with connectors at both ends. The procedure for mounting the connectors on the cable is described in the instructions supplied with the set of connectors TSX CBRT K5.

Connecting accessories

Installing an bus X extension requires, therefore, the following elements:

1 TSX CBRY 2500 kit including 1 cable, 250 meters long, supplied on a reel.	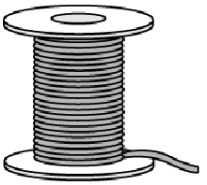
1 set of 5 connectors TSX CBRY K5, which allows you to fit 2 extension cables, leaving you with one connector as a spare.	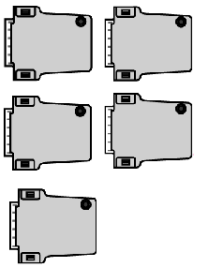

Connecting principles

Illustration:

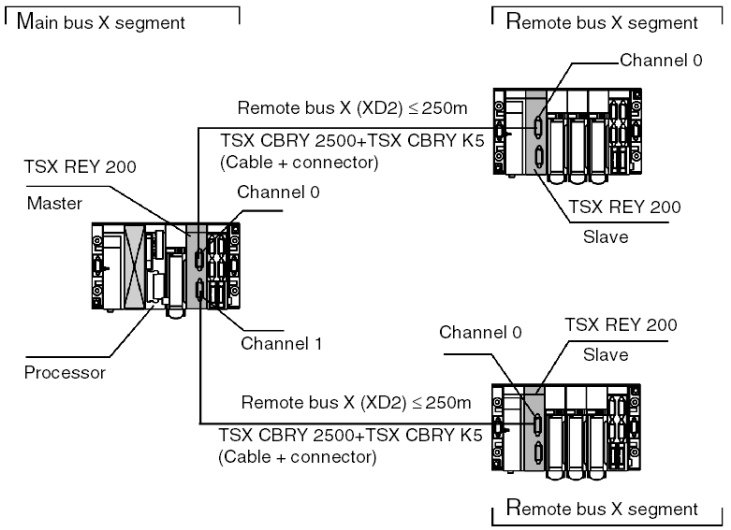

NOTE: Each bus X segment must have a A/ and B/ line terminator *(see page 396)* at each end.

X-Bus extension module: diagnostics

By indicator LEDs

The TSX REY 200 module display panel, located on the front panel of the module, is used for diagnostics on the extension system.

Illustration: display panel *(see page 408)*

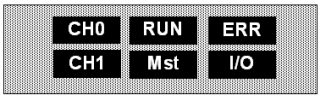

Module functioning as master (positioned on the rack with address 00)

Diagnostics table:

LED status						Module status	Comments
ERR	RUN	Mst	I/O	CH0	CH1		
F	i	i	i	i	i	Fault	No communication with the processor
Off	On	On	Off	On	Off	OK	Channel 0 active Channel 1 inactive
Off	On	On	Off	Off	On	OK	Channel 0 inactive Channel 1 active
Off	On	On	Off	On	On	OK	Channel 0 active Channel 1 active
Off	On	On	On	Off	Off	Fault	Channel 0 inactive Channel 1 inactive
Legend							
On: lit; Off: extinguished; F: flashing; i: Indeterminate							

Module functioning as slave (positioned on a rack with address other than 00)

Diagnostics table:

LED status						Module status	Comments
ERR	RUN	Mst	I/O	CH0	CH1		
F	i	i	i	i	i	Fault	No communication with the processors
Off	On	Off	Off	On	Off	OK	Channel 0 active
Off	On	Off	On	Off	Off	Fault	Channel 0 inactive
Legend							
On: lit; Off: extinguished; F: flashing; i: Indeterminate							

Topology of a PLC station with extension module

Premium station

Illustration:

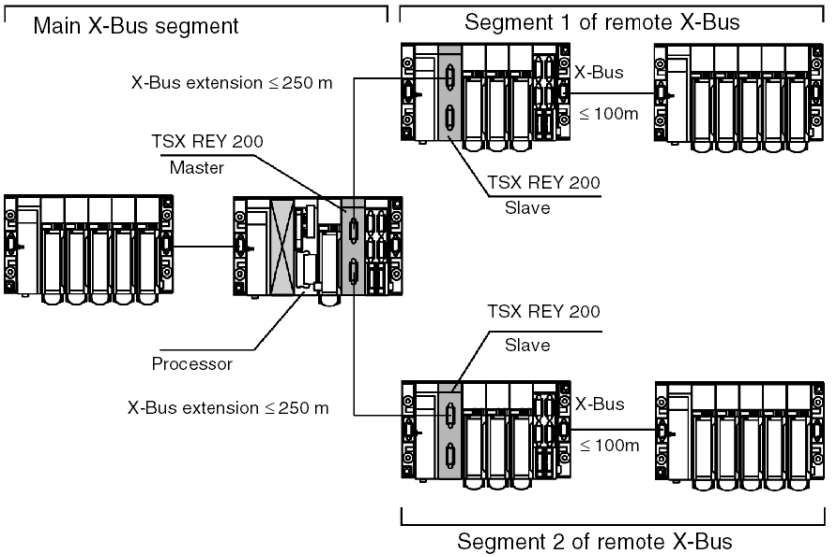

Maximum station capacity:

- With TSX P57 104\154 processors:
  - 2 TSX RKY 12 EX racks,
  - 4 TSX RKY 4EX/6EX/8EX racks.
- With TSX P57 204\254\304\354\454\554\5634\6634 and TSX H57 24M/44M processors:
  - 8 TSX RKY 12 EX racks,
  - 16 TSX RKY 4EX/6EX/8EX racks.

Atrium station

Illustration:

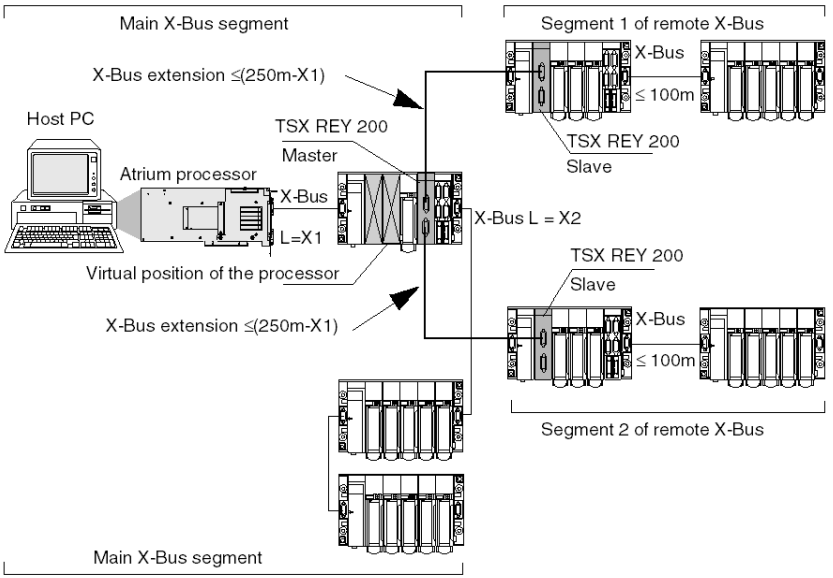

Maximum station capacity:

- With TSX PCI 57 204 processors:
  - 2 TSX RKY 12 EX racks,
  - 4 TSX RKY 4EX/6EX/8EX racks.
- With TSX PCI 57 354 processors:
  - 8 TSX RKY 12 EX racks,
  - 16 TSX RKY 4EX/6EX/8EX racks.

NOTE: In every case, the length of X-Bus extension segments is defined in relation to the location of the processor. This maximum distance is 250 meters. In the special case of the Atrium processor, when it is located in the PC, the extension distance of the X-Bus segments in relation to the rack with address 0, is equal to 250 meters minus the distance (X1) between the processor and rack with address 0. Main X-Bus segment = (X1+X2) ≤ 100 meters.

Managing a power supply module fitted with an bus X extension module

General

⚠ CAUTION

UNEXPECTED APPLICATION BEHAVIOR

If a bus X extension module (TSX REY 200) is used in an installation, then do connect, power and set to function all the racks configured in the application before managing the software application.

Failure to follow these instructions can result in injury or equipment damage.

NOTE: All use of an bux X extension module (TSX REY 200) in an installation makes management of the installation or the machine subject to all the racks configured in the application being present.
In order to do this, an application check must be carried out to make sure that all the application racks are present by testing the bit %MWxy MOD 2 X6 (explicit exchanges) on at least one module on each rack. This test allows the racks to be cleared of all incorrect declarations in the rack addressing and, in particular, if two racks bear the same address by mistake.
This test only comes into play after the installation has completely restarted (switched on, installation modified, processor RESET, configuration changed).

Chapter 54
Ventilation module

Aim of this Chapter

This Chapter deals with the ventilation module and its installation.

What Is in This Chapter?

This chapter contains the following topics:

Topic	Page
Ventilation module: general introduction	424
Ventilation module: physical description	426
Ventilation module: catalog	427
Ventilation module: dimensions	428
Ventilation module: mounting	429
Rules for installing racks fitted with ventilation modules	431
Ventilation Module: Connections	432
Ventilation module: characteristics	434

Ventilation module: general introduction

At a Glance

The ventilation modules which are installed above the TSX P57/TSX H57 PLC station racks force air convection in order to make uniform the ambient temperature inside the casing and thus eliminate the various hot spots which may exist.

NOTE: A temperature probe built into each module informs the user when the ambient temperature has reached its maximum value.

ventilation module:

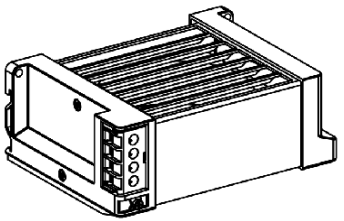

Use of ventilation modules

The use of these modules is recommended in the following cases:

- **Ambient temperature in the 25°C...60°C range:** the life of the various components of the Premium PLC is increased (MTBF increased by 25%).
- **Ambient temperature in the 60°C...0.70°C range:** the ambient temperature being limited to 60°C without ventilation, forced ventilation makes it possible to lower the temperature inside the modules by 10°C, which brings the internal temperature of the modules back to the equivalent of 60°C at ambient temperature.

Different module types

Three ventilation modules are available, adapted to the main supply networks: ventilation module with 24 VDC, 110 VAC or 220 VAC power supply.

According to the rack modularity (4, 6, 8 or 12 positions), 1, 2 or 3 ventilation modules are to be fitted above each rack:

- 12-position racks TSX RKY 12/12EX: 3 ventilation modules,
- 8-position racks TSX RKY 8/8EX: 2 ventilation modules,
- 4 and 6-position racks TSX RKY 4EX/6/6EX: 1 ventilation module.

Illustration:

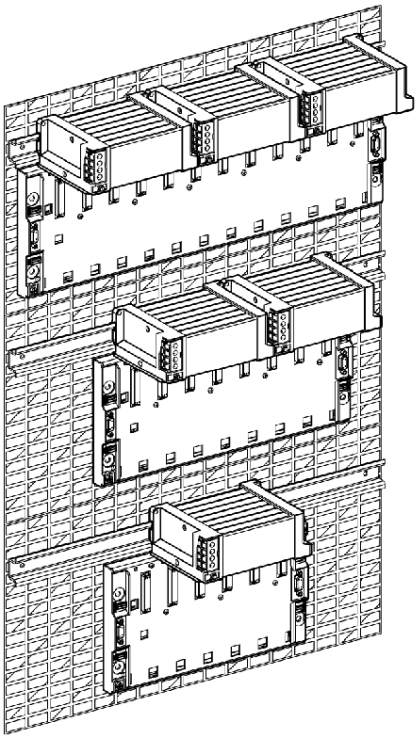

TSX RKY 12/12EX

TSX RKY 8/8EX

TSX RKY 4EX/6/6EX

Ventilation module: physical description

Illustration

Descriptive diagram:

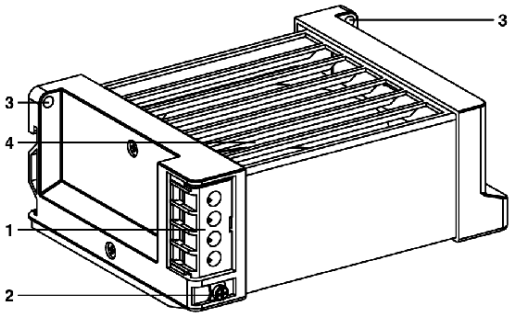

Table of labels

This table gives you descriptions according to the labels:

Label	Description
1	Terminal block for connecting: ● the module power supply, ● the supply for the temperature probe and the associated LED or pre-actuator. Each terminal can receive one 1.5 mm^2 (14 AWG) wire without a wire end ferrule, or two 1 mm^2 (16 AWG) wires with wire end ferrules.
2	Terminal for connecting the module to the ground.
3	Holes for fixing the module (M4 x 12 screws). If these modules are used with Premium PLCs, the ventilation modules must be fixed on an AM1-ED ... 35 x 15 mounting rail .
4	Louvered slats which send air to the front.

Ventilation module: catalog

Catalog

This table shows the different types of ventilation modules:

Product references	TSX FAN D2 P	TSX FAN A4 P	TSX FAN A5 P
	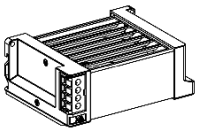	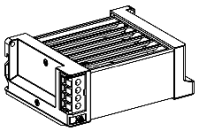	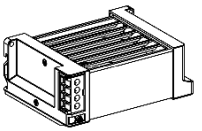
Power supply voltage	24 VDC	110 VAC	220 VAC
Temperature probe	Yes (temperature detection. 80°C +/- 5°C), opens on alarm		
No. of modules per rack	• 1 module on 4 and 6-position racks (TSX RKY 4EX/6/6EX), • 2 modules on 8-position racks (TSX RKY 8/8EX), • 3 modules on 12-position racks (TSX RKY 12/12EX).		

Ventilation module: dimensions

Ventilation module alone

Illustrative diagram (dimensions in millimeters):

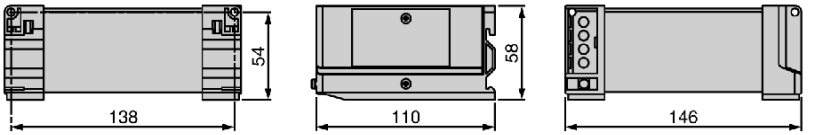

Rear view Right-hand view Front view

Ventilation module + rack

Illustrative diagram (dimensions in millimeters):

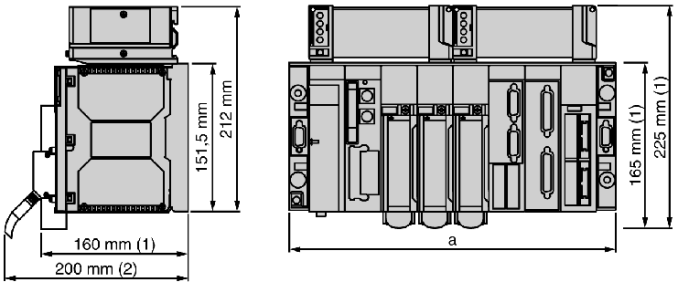

(1) with screw terminal block module,

(2) maximum depth for all types of modules and their associated connectors.

Characteristics table:

Racks	Number of positions	a
TSX RKY 4EX	4	187.9 mm
TSX RKY 6/6EX	6	261.6 mm
TSX RKY 8/8EX	8	335.3 mm
TSX RKY 12/12EX	12	482.6 mm

Ventilation module: mounting

General

The ventilation modules associated with Premium/Atrium stations must be mounted on 35mm wide and 15mm deep mounting rails (type AM1-ED...) in order to compensate for the depth of the rack.

Diagram:

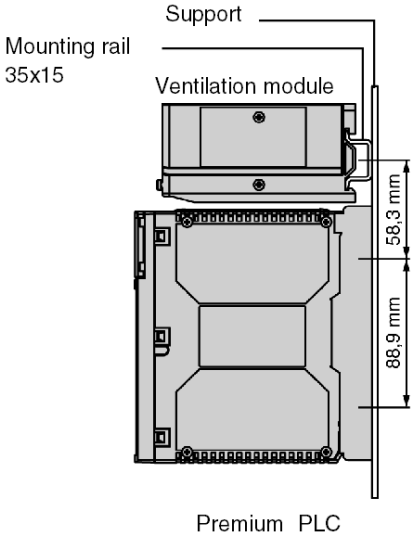

Mounting position

Mounting position for ventilation modules according to rack-type:

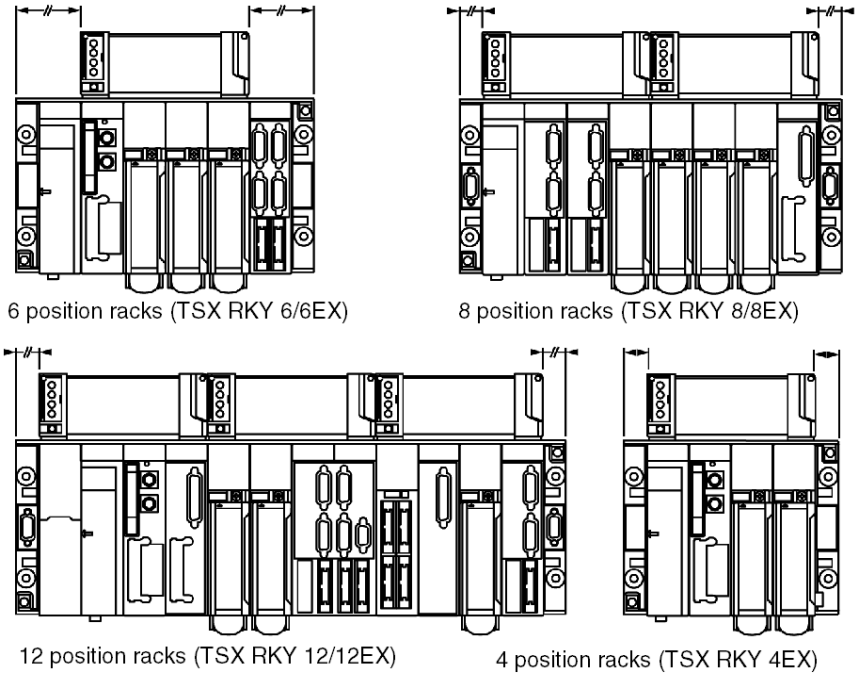

Rules for installing racks fitted with ventilation modules

Illustration

Principle diagram: see *Installing Racks, page 368*

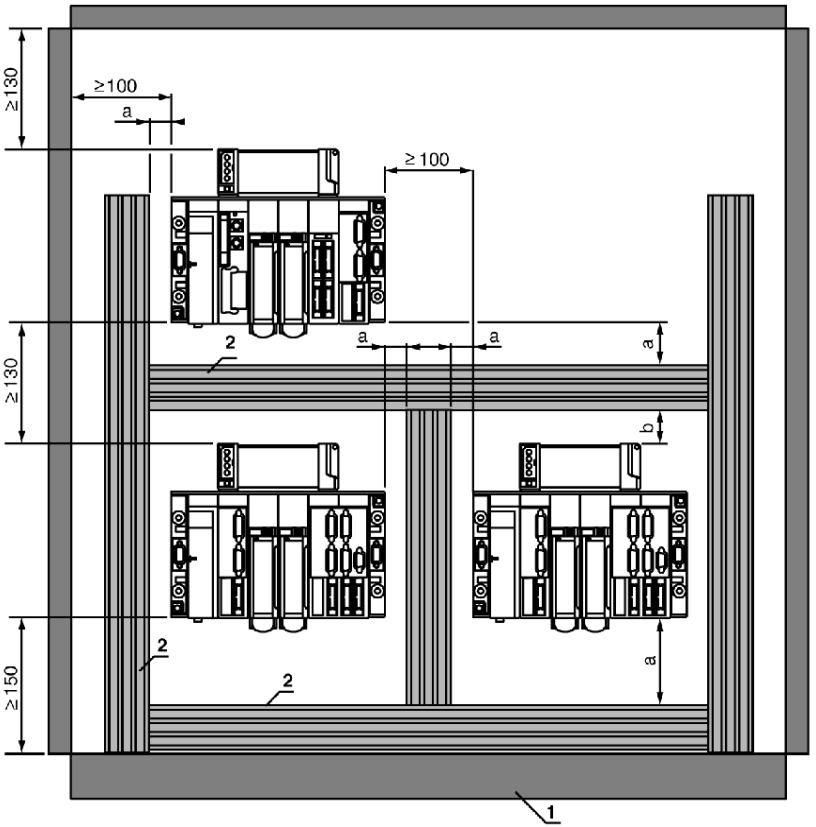

a = 50 mm b = 30 mm

1 Installation or casing.

2 Trough or cable tray.

Ventilation Module: Connections

Connection of the Ventilation Module Power Supply

Illustration:

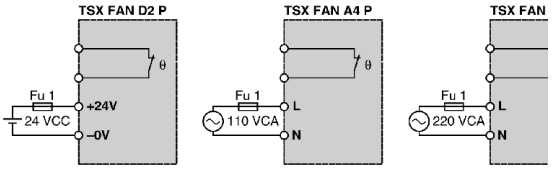

NOTE: When using several ventilation modules of the same type, use a common power supply for all the ventilation modules.

Connection of the Temperature Probe Power Supply

The Temperature probe may be supplied either by a direct current or alternating current and be connected to a LED indicator, a PLC input, etc. .

Diagram:

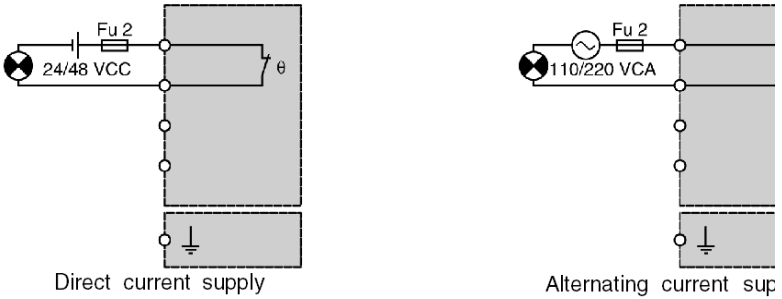

NOTE: When using several ventilation modules, the probe contacts shall be serialized.

Illustration:

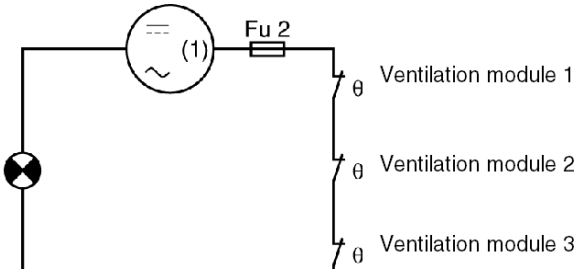

(1) direct 24/28 V or alternating 110/220 V

Ventilation module: characteristics

Table of Characteristics

Table of ventilation module characteristics:

Reference		TSX FAN D2 P	TSX FAN A4P	TSX FAN A5P
		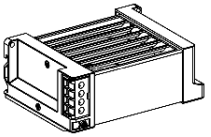	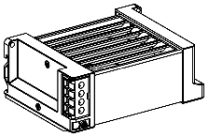	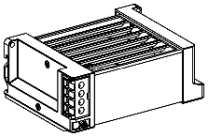
Supply voltage	Nominal	24 VDC	110 VAC	220 VAC
	Limit	20..27.6 VDC	90120 VAC	180260 VAC
Current consumed at nominal voltage		180 mA	180 mA	100 mA
Temperature probe	Power supply voltage	direct 24/28 VDC or alternating 110/220 VAC		
	Outage power (on resistive load)	1 A at 24 VDC / 10,000 operations 1 A at 48 VDC / 30,000 operations 1 A at 110 VDC / 30,000 operations 0.5 A at 220 VDC / 10,000 operations		
	Deactivation	Temperature>= 75°C +/- 5°C		
	Status	0.5 A at 220 VDC / 10,000 operations Temperature>= 75°C +/- 5°C		
No. of modules per rack		• 1 module on 4 and 6-position racks (TSX RKY 4EX/6/6EX), • 2 modules on 8-position racks (TSX RKY 8/8EX), • 3 modules on 12-position racks (TSX RKY 12/12EX).		

Index

A

addressing
    Atrium, *212*
    Atrium , *213*
    modules, *385*
    racks, *382*
agency approvals, *69*
alarm relays
    power supplies, *288*
architectures, *420*

B

batteries for CPUs
    replacement, *234*
batteries for PCMCIA cards
    replacement, *122*
battery for PCMCIA cards
    lifetime, *126*
Bus X extension modules: connections, *417*

C

compliance, *69*

D

diagnosing CPU modules, *116*
diagnosing power supplies, *282*
diagnostics for CPU modules, *115*
    Premium, *115*
diagnostics for power supplies, *281*
diagnostics for SPU modules
    Atrium, *231*

E

event response time, *190*

F

fusing, *278*

G

grounding
    racks, *373*

I

Installation of the modules on rack, *387*
installing batteries, *115*
installing CPUs
    Atrium, *205*
    Premium, *391*
installing line terminations, *398*
installing memory cards, *110*
installing power supplies, *263*
    Atrium, *216*
installing process power supplies, *339*
installing racks, *367*

M

memory
    CPU modules, *93*
memory cards, *95*

O

overview of a PLC station, *17*

P

PCMCIA cards, *95*
performance, *181*
power consumption, *293*
power supply modules, *253*
process power supply modules, *315*

processors
    Atrium, *191*
    Premium, *77*

R

Racks, *26*
racks
    accessories, *391*
Real-time clocks, *85*

T

TBXSUP10, *315*
topologies, *420*
    racks, *375*
TSXBAT02, *122*
TSXBAT03, *122*
TSXCBY..0K, *391*
TSXCBY1000, *391*
TSXFAN, *423*
TSXH5724M, *77*
TSXH5744M, *77*
TSXP53204, *77*
TSXP57/TSXH57, *77*
TSXP570244, *77*
TSXP57104, *77*
TSXP57154, *77*
TSXP571634, *77*
TSXP57254, *77*
TSXP572634, *77*
TSXP57304, *77*
TSXP57354, *77*
TSXP573634, *77*
TSXP57454, *77*
TSXP574634, *77*
TSXP57554, *77*
TSXP575634, *77*
TSXP576634, *77*
TSXPCI57204, *191*
TSXPCI57354, *191*
TSXPCIACC1, *201*
TSXPSI2010, *201*
TSXPSY1610, *309*
TSXPSY2600, *303*
TSXPSY3610, *311*
TSXPSY5500, *305*
TSXPSY5520, *313*
TSXREY200, *405*
TSXRKA02, *399*
TSXRKYxx, *355*
TSXSUP101, *315*
TSXSUP1011, *315*
TSXSUP1021, *315*
TSXSUP1051, *315*
TSXTLYEX, *396*

V

VAC power systems, *275*
VDC power systems, *275*
ventilation modules, *423*

W

wiring accessories, *201*

X

X-Bus extension module: diagnostics, *419*
X-Bus extension modules, *405*