Catalog | January 2023

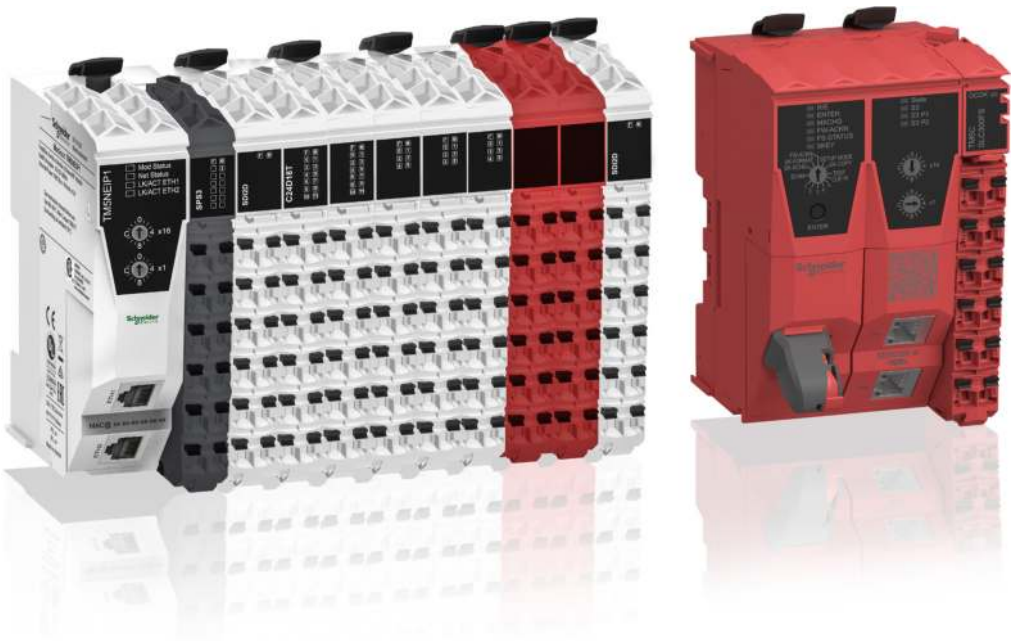

Modicon TM5

High-Performance and Safe IP20 Modular I/O System

www.se.com

Life Is On | Schneider Electric

Modicon

Discover Modicon

Edge control for Industrial IoT

Modicon IIoT-native edge controllers manage complex interfaces across assets and devices or directly into the cloud, with embedded functional safety and cybersecurity. Modicon provides performance and scalability for a wide range of industrial applications up to high-performance multi-axis machines and high-available redundant processes.

Explore our offer

- Modicon HVAC Controllers
- Modicon PLC
- Modicon Motion Controllers
- Modicon PAC
- Modicon I/O
- Modicon Networking
- Modicon Power Supply
- Modicon Wiring
- Modicon Safety

Life Is On | Schneider Electric

Quick access to product information

Get technical information about your product

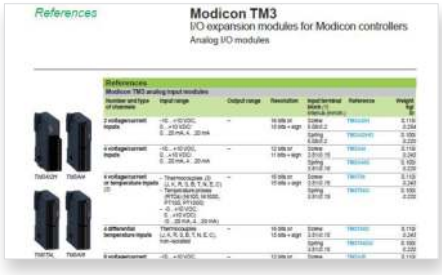

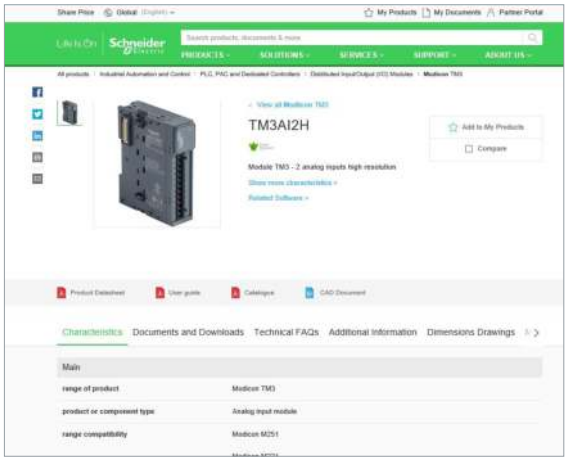

Each commercial reference presented in a catalog contains a hyperlink. Click on it to obtain the technical information of the product:

- Characteristics, Dimensions and drawings, Mounting and clearance, Connections and schemas, Performance curves
- Product image, Instruction sheet, User guide, Product certifications, End of life manual

Find your catalog

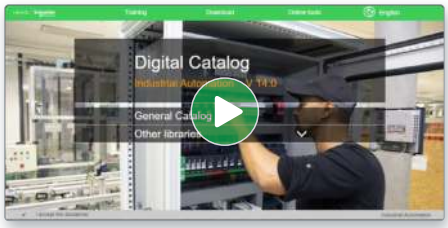

> With just 3 clicks, you can access the Industrial Automation and Control catalogs, in both English and French

> Consult digital automation catalogs at Digi-Cat Online

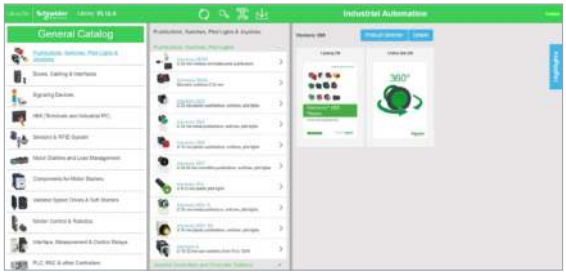

- Up-to-date catalogs
- Embedded product selectors,360° pictures
- Optimized search by commercial references

Select your training

> Find the right Training for your needs on our Global website

> Locate the training center with the selector tool, using this link

Life Is On | Schneider Electric

General content

Modicon TM5
High-Performance and Safe IP20 Modular I/O System

Introduction to EcoStruxure Machine . . . . . *page 2*
Selection guide: controllers for industrial machines . . . . . *page 4*
Machine automation . . . . . *page 6*

- **Modicon TM5 range** ..... *page 8*
- **Modicon TM5 expansion system** ..... *page 9*
- **24 V ⎓ digital modules and 24 V ⎓ digital/analog module**
  Selection guide . . . . . *page 10*
  - Presentation, Description ..... *page 12*
  - References, Accessories ..... *page 13*
- **100/240 V ∿ digital modules**
  Selection guide . . . . . *page 10*
  - Presentation, Description ..... *page 14*
  - References ..... *page 15*
- **24 V ⎓ digital compact block**
  Selection guide . . . . . *page 16*
  - Presentation, Description, References ..... *page 17*
- **Analog modules**
  Selection guide . . . . . *page 18*
  - Presentation, Description ..... *page 20*
  - References ..... *page 21*
- **Counter modules**
  Selection guide . . . . . *page 22*
  - Presentation, Description ..... *page 24*
  - References ..... *page 25*
- **Transmitter and receiver modules**
  - Presentation, Description ..... *page 26*
  - References ..... *page 27*
- **IO-Link master module**
  - Presentation, Description ..... *page 28*
  - References ..... *page 29*
- **Communication module for RS232 serial link**
  - Presentation, Description ..... *page 30*
  - References ..... *page 31*
- **Common distribution modules**
  - Presentation, Description, References ..... *page 32*
- **Power distribution modules**
  - Presentation, Description, References ..... *page 33*
- **Safety logic controllers**
  - Presentation ..... *page 34*
  - Certification, Description, References ..... *page 35*
- **Safety I/O modules**
  - Presentation, Description ..... *page 36*
  - References ..... *page 37*
- **Interface modules for distributed I/O on network and buses**
  Selection guide . . . . . *page 38*

□ Interface module for distributed I/O over **Ethernet**
  - Presentation ..... *page 40*
  - Description, References ..... *page 41*

□ Interface module for distributed I/O on **CANopen** bus
  - Presentation ..... *page 42*
  - Description, References ..... *page 43*

□ Interface module for distributed I/O on **Sercos** bus
  - Presentation ..... *page 44*
  - Description, References ..... *page 45*

- **Product reference index** ..... *page 46*

To be competitive in today's digital era, machine builders must be innovative. Smart machines, those that are better connected, more flexible, more efficient, and safe, are enabling machine builders to innovate in ways never before possible.

EcoStruxure, Schneider Electric's open, IoT-enabled architecture and platform, offers powerful solutions for the digital era. As part of this, EcoStruxure Machine brings powerful opportunities for machine builders and OEMs, empowering them to offer smart machines and compete in the new, digital era.

EcoStruxure Machine brings together key technologies for product connectivity and edge control on premises, and cloud technologies to provide analytics and digital services. EcoStruxure Machine helps you bring more innovation and added value to your customers throughout the entire machine life cycle.

Innovation at Every Level for Machines is full systems across three layers:

– Connected products
Our connected products for measuring, actuating, device level monitoring, and control adhere to open standards to provide unmatched integration opportunities and flexibility

– Edge Control
We are IIoT-ready with a proven set of tested and validated reference architectures that enable the design of end-to-end open, connected, and interoperable systems based on industry standards. Ethernet and OPC UA facilitates IT/OT convergence meaning machine builders reap benefits from web interfaces and cloud.

– Apps, Analytics & Services
Seamless integration of machines to the IT layer allows the collection and aggregation of data ready for analysis – for machine builders and end users alike this means increased uptime and the ability to find information faster for more efficient operations and maintenance.

These levels are completely integrated from shop floor to top floor. And we have cloud offers and end-to-end cybersecurity wrapped around.

EcoStruxure Machine makes it easier for OEMs/machine builders to offer their customers smarter machines. The advent of smart machines is driven by the changing needs of end users:

- Evolving workforce
- Reducing costs
- Dynamic markets
- Shorter life cycles
- Prioritizing functional safety and cybersecurity

EcoStruxure Machine provides one solution for the whole machine life cycle:

- With Smart Design & Engineering the time to market is reduced by up to 30% using our automated engineering and the simulation capabilities
- During Commissioning & Operation of the machine, resources such as energy, material and loss can be improved, and with seamless integration to the IT world efficiency can be improved by up to 40%
- Smart Maintenance & Services reduces the time for corrective actions up to 50%

EcoStruxure™ Machine

* The Schneider Electric industrial software business and AVEVA have merged to trade as AVEVA Group plc, a UK listed company. The Schneider Electric and Life is On trademarks are owned by Schneider Electric and are being licensed to AVEVA by Schneider Electric.

Modicon TM5

High-Performance and Safe IP20 Modular I/O System

Controllers for industrial machines

Applications	Type	**Logic controller**			**Logic/motion controller**	**Motion controller**
	Specification	For hardwired architectures	For performance-demanding applications	For modular and distributed architectures	IIoT ready for performance machines	For automating machines/lines with 0 - 130 servo or robot axes
Memory		640 KB RAM, 2 MB Flash	64 MB RAM, 128 MB Flash	64 MB RAM, 128 MB Flash	192 MB RAM, 256 MB Flash	128 KB to 256 KB NV RAM, 512 MB DDR2 to 1 GB DDR3L
Supply voltage		24 V ⎓ or 100...240 V ∿	24 V ⎓ or 100...240 V ∿	24 V ⎓	24 V ⎓	24 V ⎓
Communication fieldbus and networks	Embedded	■ EtherNet/IP Adapter ■ Modbus TCP ■ RS 232/RS 485 Serial Line ■ USB mini-B programming port	■ EtherNet/IP ■ Modbus TCP ■ CANopen (master) and SAE J1939 ■ Serial Line ■ USB mini-B programming port	■ EtherNet/IP ■ Modbus TCP ■ CANopen (master) and SAE J1939 ■ Serial Line ■ USB mini-B programming port	■ EtherNet/IP ■ Modbus TCP ■ Sercos III ■ Serial Line ■ USB mini-B programming port	■ EtherNet/IP ■ Sercos III ■ CANopen ■ Profibus ■ Profinet ■ EtherCAT
	OPC Unified Architecture (OPC UA)	–	■ Server	■ Server	■ Server (encrypted) ■ Client (encrypted) (depending on reference)	■ Server (encrypted) ■ Client (encrypted)
	Optional	■ 1 Serial Line	■ Ethernet ■ Profibus DP	■ Ethernet ■ Profibus DP	■ Ethernet, EtherNet/IP Adapter ■ CANopen Master	■ CANopen ■ Profibus DP ■ RT-Ethernet
Embedded I/O	Input types	Up to 40 logic inputs 2 analog inputs	Up to 24 logic inputs	–	4 fast digital inputs	Up to 20 digital inputs Up to 16 touch probe inputs Up to 4 interrupt inputs Up to 2 analog inputs
	Output types	Up to 16 relay outputs Up to 16 tansistor outputs	Up to 16 tansistor outputs	–	4 fast digital outputs	Up to 16 digital outputs Up to 2 analog outputs
Synchronized axes		–	–	–	Up to 24 synchronized axes	Up to 130 synchronized axes
Configuration software		EcoStruxure Machine Expert-Basic	EcoStruxure Machine Expert			
Compatible expansion I/O module ranges (Consult the catalog)						
	● Local I/O	● Modicon TM3 (DIA3ED2140109EN)	● Modicon TM3 (DIA3ED2140109EN)	● Modicon TM3 (DIA3ED2140109EN)	● Modicon TM3 (DIA3ED2140109EN)	–
	● Remote I/O	● Modicon TM3 (DIA3ED2140109EN)	● Modicon TM3 (DIA3ED2140109EN)	● Modicon TM3 (DIA3ED2140109EN)	● Modicon TM3 (DIA3ED2140109EN)	–
	● Distributed I/O on Ethernet	● Modicon TM3 (DIA3ED2140109EN)	● Modicon TM3 (DIA3ED2140109EN) ● Modicon TM5 (DIA3ED2131204EN)	● Modicon TM3 (DIA3ED2140109EN) ● Modicon TM5 (DIA3ED2131204EN)	● Modicon TM3 (DIA3ED2140109EN) ● Modicon TM5 (DIA3ED2131204EN)	● Modicon TM5 (DIA3ED2131204EN)
	● Distributed I/O on CANopen	–	● Modicon TM3 (DIA3ED2140109EN)	● Modicon TM3 (DIA3ED2140109EN)	● Modicon TM3 (DIA3ED2140109EN) ● Modicon TM5 (DIA3ED2131204EN) ● Modicon TM7 (DIA3ED2140405EN)	● Modicon TM3 (DIA3ED2140109EN) ● Modicon TM5 (DIA3ED2131204EN) ● Modicon TM7 (DIA3ED2140405EN)
	● Distributed I/O on Sercos	–	–	–	● Modicon TM5 (DIA3ED2131204EN)	● Modicon TM5 (DIA3ED2131204EN)
	● Distributed I/O on Modbus Serial Line	● Modicon TM3 (DIA3ED2140109EN)	● Modicon TM3 (DIA3ED2140109EN)	● Modicon TM3 (DIA3ED2140109EN)	● Modicon TM3 (DIA3ED2140109EN)	–
	● Safety I/O	● Modicon TM3 (DIA3ED2140109EN)	● Modicon TM3 (DIA3ED2140109EN)	● Modicon TM3 (DIA3ED2140109EN)	Safety I/Os are only supported by the Motion variant of M262 ● Modicon TM3 (DIA3ED2140109EN) ● Modicon TM5 (DIA3ED2131204EN) ● Modicon TM7 (DIA3ED2140405EN)	● Modicon TM5 (DIA3ED2131204EN) ● Modicon TM7 (DIA3ED2140405EN)
Controller range		**Modicon M221/M221 Book**	**Modicon M241**	**Modicon M251**	**Modicon M262**	**PacDrive LMC Eco, LMC Pro2**
More details on our website	Consult the catalogs	DIA3ED2140106EN	DIA3ED2140107EN	DIA3ED2140108EN	DIA3ED2180503EN	DIA7ED2160303EN
	Try the configuration tool	**Modicon PLC configurator**				

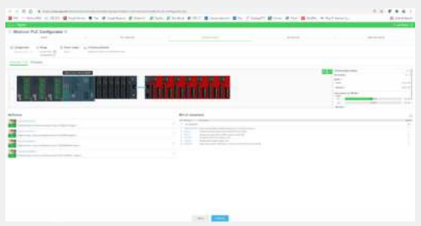

> Select your architecture of controller and I/O by
- Usage and application
- Connectivity, services and IIOT (Protocols, WeB and communication services)
- I/O
- Power supply

Modicon TM5

High-Performance and Safe IP20 Modular I/O System

Machine Automation

Machine Automation

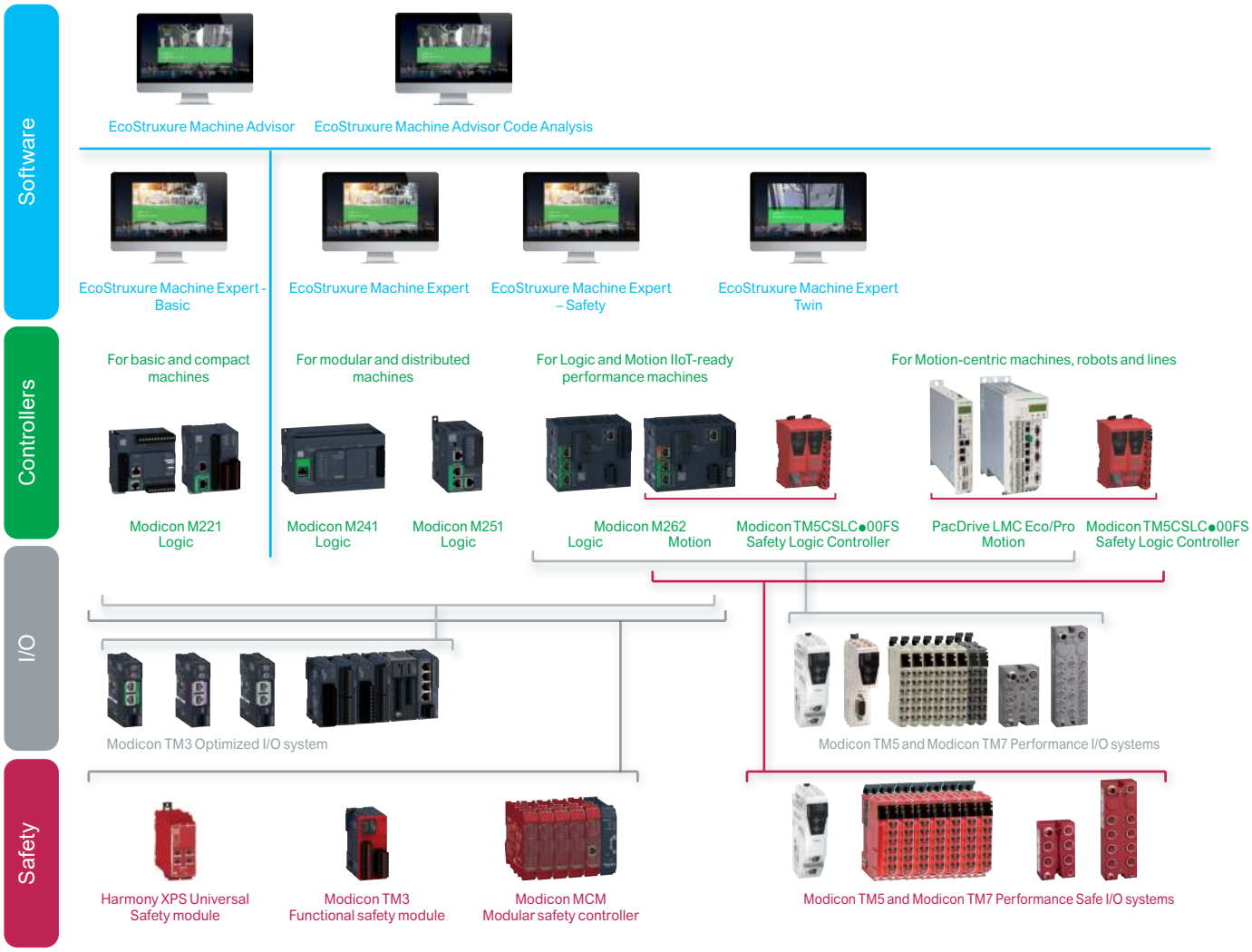

Machine control

> From basic to motion- and robot-centric machines with the PacDrive 3 offer, Modicon controllers and solutions bring a consistent and scalable response to achieving flexibility, performance, productivity and digitization.

The scalability and consistency of I/O ranges allow you to select the right offer depending on your needs

> Modicon TM3 Optimized I/O system for more compact and modular machines
> Modicon TM5 for more performance-demanding machines, with Modicon TM7 for harsh environments: Both Performance I/O ranges (Modicon TM5 and Modicon TM7) allow safety functions to be implemented using Modicon TM5CSLC●00FS safety logic controller

Embedded Safety provides holistic solutions to Modicon M262 and PacDrive 3 LMC motion controllers, increasing overall safety demand in Machine Automation

> Modicon TM5CSLC●00FS safety logic controllers are suitable safety option for Medium to large size applications with Motion safety functions
> Harmony XPS Universal safety modules cover a wide range of safety functions, suitable for small applications with 4-5 safety functions, with diagnostic information provided to controllers via a single wire connection
> Modicon TM3 safety functional modules are suitable for small applications covering E-Stop functions and diagnostics via TM3 I/O bus
> Modicon MCM modular safety controllers are suitable for medium size applications with up to 64 dual channel safety functions and diagnostics via Modbus TCP, Modbus RTU, EtherNet/IP, CANopen, EtherCAT and Profibus

All of those devices are managed within a single software, EcoStruxure Machine Expert, a powerful and collaborative engineering environment

> EcoStruxure Machine Expert – Safety: an optional addon for programming TM5CSLC●00FS safety logic controllers
> EcoStruxure Machine Expert – Basic: a software for programming Modicon M221 logic controllers, an intuitive standalone environment accessible to basic skilled technicians
> EcoStruxure Machine Advisor: a cloud-based services platform designed for machine builders to track machines in operation worldwide, monitor performance data and resolve exceptional events

Machine Automation

Comprehensive Schneider offers for machine builders

> Lexium servo drives, motors and robotics are designed to control applications ranging from a single independent axis up to high-performance synchronized multi-axis machines requiring high-speed and precise positioning and movements

Multi carrier systems

Robotics

Integrated drives

Servo Drives & Motors

Steppers Drives & Motors

> The Lexium offer is designed for a broad range of motion-centric machines in applications such as Packaging, Material Handling, Material Working, Food and Beverage and Electronics

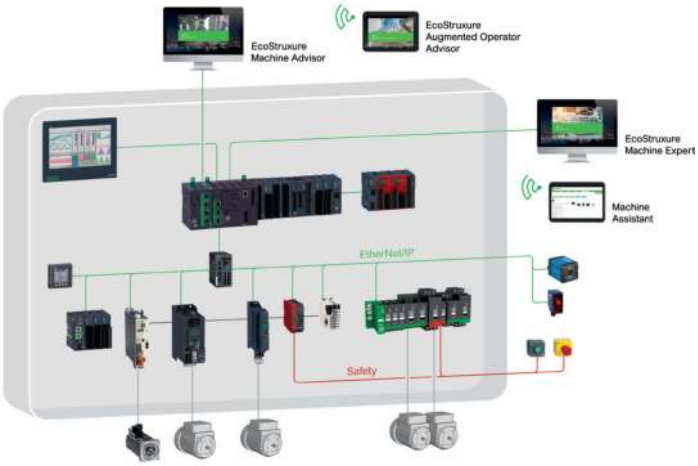

> Schneider Electric has developed Tested Validated & Documented Architectures (TVDA) applicable for generic machine control applications as well as for dedicated segment applications such as Packaging, Material Working, Material Handling, Hoisting, Pumping, or generic Machine Control applications

Choose Schneider Electric to help secure your investment and benefit from worldwide services at every step of your project

Renew
Being your expert to control and renew your aging equipment at the right time and at optimal cost

Optimize
Identifying how you can get even more out of your equipment and further improve your return on investment

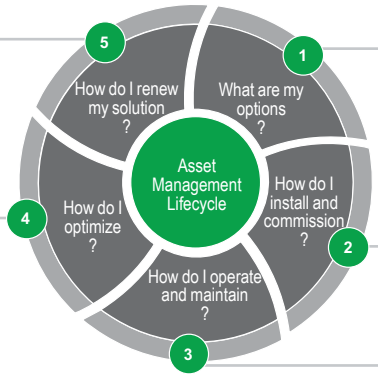

Plan
Discussing your maintenance policy and needs arising from it

Install
Delivering services to help ensure your equipment is set up reliably and starts to operate efficiently from day one

Operate
Providing services to support you during normal operations as well as during maintenance breaks and in unexpected situations
Collaborating to maximize your uptime and performance as well as become more proactive in operations

> From planning and inception to modernization, we help ensure optimal technical and business performance. Our field service engineers combine 30+ years of manufacturer-level experience with the latest technology to bring innovation to every level of our offer and every step of your project.

> Our machine control dedicated services empower you to maximize your business infrastructure and face increasingly stringent demands on productivity, safety, equipment availability and performance optimization.

Modicon TM5

High-Performance and Safe IP20 Modular I/O System

Modicon TM5 range

1 2 3 1 2 3

Expansion modules
1 Base
2 Electronic module
3 Terminal block

Compact blocks

Safety logic controller

1 2 3

Safety I/O module
1 Safety base
2 Safety electronic module
3 Safety terminal block

1 2 3

Communication interface module for distributed I/O on
1 Ethernet network
2 CANopen bus
3 Sercos III bus

Catalog ref. DIA3ED2140405EN

Modicon TM5 range

The Modicon TM5 offer has been developed to create flexible, scalable I/O configurations for automation solutions based on Modicon and PacDrive controllers:
- Modicon M241, M251, and M258 logic controllers
- Modicon LMC058 and LMC078 motion controllers
- Modicon M262 logic/motion controllers
- PacDrive LMC Eco/Pro2 motion controllers

This offer also includes two safety controllers and safety I/O modules compatible with the Modicon M262 logic/motion controller and PacDrive LMC Eco/Pro2 motion controllers.
The Modicon TM5 I/O system is fully compatible with **EcoStruxure Machine Expert** software.
This I/O system is made up of blocks and expansion modules, offering the following advantages:
- Simplified installation and maintenance
- Embedded diagnostics for local and remote supervision
- Hot swapping of I/O modules
- Ease of wiring provided by spring terminals and removable terminal blocks

I/O expansion modules

- Digital I/O modules and compact digital input blocks, see pages 10 to 17
- Digital/analog I/O modules, see page 13
- Analog I/O modules, see pages 18 to 13
- Counter modules, see pages 22 to 25
- Transmitter and receiver modules for remote extension via the TM5 bus, see page 26
- IO-Link master module, see page 28
- Communication module for RS232 serial link, see page 30
- Common distribution modules, see page 32
- Power distribution modules, see page 33

Expansion modules comprise three parts to be ordered separately:
- An electronic module
- A bus base
- A terminal block

Safety controllers and modules

Modicon TM5 safety modules are associated with Modicon TM5CSLC●00FS safety logic controllers to provide distributed safety solutions on the Sercos III bus up to SIL 3 conforming to IEC 61508, Cat. 4, PLe conforming to ISO 13849-1, and SIL CL3 conforming to IEC 62061, see pages 34 to 36.

Modicon TM5 safety offer comprises:
- Safety logic controllers
- Safety digital input and ouput modules
- Safety analog input modules
- Safety counter module

Communication interface module for distributed I/O

- Ethernet network interface module for distributed I/O over Ethernet, see pages 40 and 41
- CANopen fieldbus interface module for distributed I/O on the CANopen bus, see pages 42 and 43
- Sercos bus interface module for distributed I/O on the Sercos III bus, see pages 44 and 45

Each communication interface module comprises four parts to be ordered separately:
- A network or bus base
- An interface electronic module
- A power distribution electronic module
- A removable terminal block

TM7 blocks

Modicon TM7 is an IP67 modular I/O system comprising digital and analog I/O blocks, including safety I/O. The TM7 blocks complement distributed I/O architectures by using the product at the heart of machines in harsh environments (where there is a risk of splashing water, oil, dust, etc.). Please refer to the catalog ref. DIA3ED2140405EN.

Modicon TM5 expansion system

EcoStruxure Machine Expert software is used to configure local and remote I/O and distributed I/O islands.

Local and remote I/O configuration

With Modicon M258 logic controller and Modicon LMC058 motion controller only

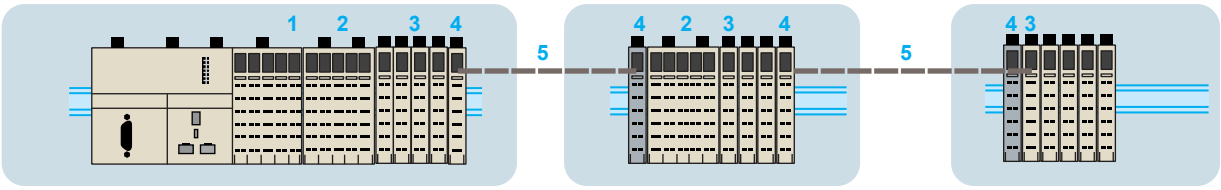

1 Modicon M258 logic controller
2 Compact I/O blocks
3 I/O expansion modules
4 Transmitter module/Receiver module
5 TM5 expansion bus cable
6 Common distribution modules

■ Local I/O: Compact blocks represent a way of adding a large number of I/O using a single component, and thus a single product reference. I/O expansion modules complete this configuration and, being modular with between 2 and 12 channels, make it possible to adjust the number of channels to exactly that required. The addition of digital, analog, temperature, or high-speed counter modules increases the processing capabilities of applications.

■ Remote I/O: Because of its backplane bus management, Modicon TM5 system can be used to control I/O modules remotely.

- The same modules can be used in a local and remote configuration, linked together via TM5 expansion bus cables.
- The maximum distance between 2 islands is 100 m *(328 ft)* and the maximum number of islands is 25, i.e. a total distance of 2,500 m *(8,202 ft)*. This ensures a high degree of flexibility, while maintaining synchronized data acquisition, since all the expansion modules are on the same backplane bus.

Distributed I/O configuration

With Modicon M241 and Modicon M251 logic controllers, Modicon M262 logic/motion controllers, and PacDrive LMC Eco/Pro2 motion controllers

Modicon TM5 system offers the option to create distributed I/O islands on the following networks and buses:

■ With the **Ethernet ne**twork interface module, see page 40

■ With the **CANopen** bus interface module, see page 42

■ With the **Sercos** bus interface module, see page 44

Example: distributed I/O configuration over Ethernet

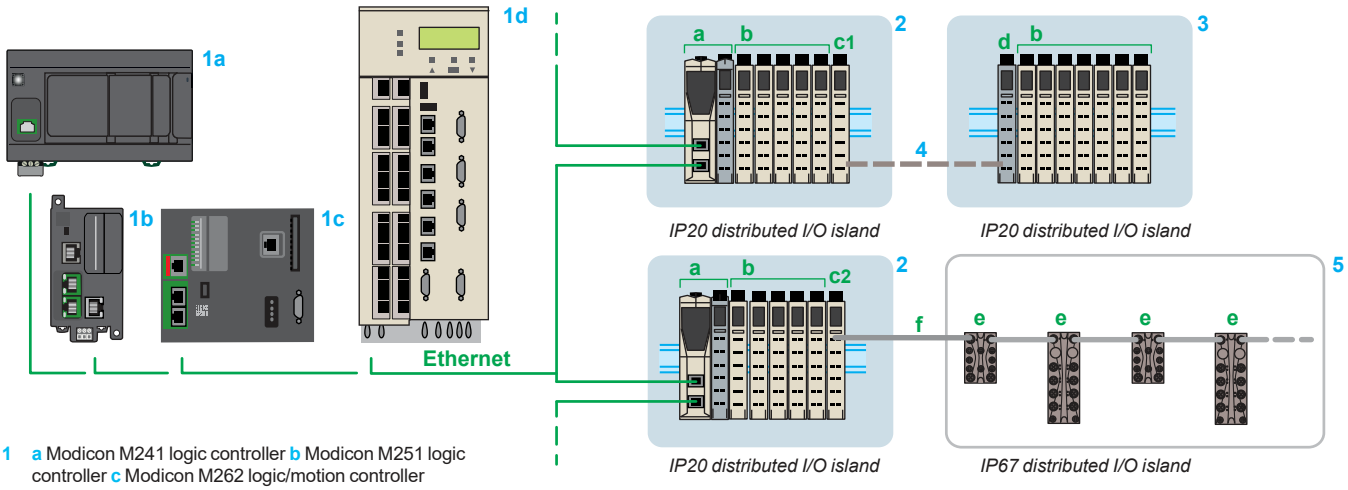

1 a Modicon M241 logic controller b Modicon M251 logic controller c Modicon M262 logic/motion controller d PacDrive LMC Eco/Pro2 motion controllers: Ethernet network masters
2 TM5 Ethernet interface module (slave) (a) + TM5 modules (b) + TM5SBET1 (c1)/TM5SBET7 (c2) transmitter modules
3 TM5SBER2 receiver module (d) + TM5 I/O modules (b)
4 TM5 expansion bus: TCSXCNNXNX100 remote I/O cable
5 Modicon TM7 blocks *(1)* (digital or analog I/O) (e) + TM7TCSXCN●●●E bus expansion cable (f)

(1) Modicon TM7, please refer to catalog ref. DIA3ED2140405EN

Modicon TM5

High-Performance and Safe IP20 Modular I/O System

24 V ⎓ digital and digital/analog modules

Applications		**4 to 16 digital input channels**						**4 digital input channels and 1 analog input channel 2 digital output channels and 1 analog output channel**	**4 digital input channels 4 transistor output channels with timestamping and oversampling functions**	**8 digital input channels 4 transistor output channels**	**2 to 16 transistor output channels**						**2 transistor output channels**	**2 to 4 relay output channels**	
Compatibility	Local and remote I/O	■ Modicon M258 logic controller ■ Modicon LMC058 motion controller							–	■ Modicon M258 logic controller ■ Modicon LMC058 motion controller									
	Distributed I/O	■ **Ethernet net**work interface module ■ **CANopen** bus interface module ■ **Sercos** bus interface module							■ **Sercos** bus interface module	■ **Ethernet net**work interface module ■ **CANopen** bus interface module ■ **Sercos** bus interface module									
Channel connection		Via removable spring terminal blocks (to be ordered separately)						Via removable spring terminal blocks (to be ordered separately)											
Digital inputs	Number and type	**4**	**6**	**12**	**16**	**4**	**6**	**4**	**4**	**8**									
	Nominal input voltage	24 V ⎓				100/240 V ∿		24 V ⎓	24 V ⎓	24 V ⎓									
	IEC/EN 61131-2 conformity	Type 1				Type 1		Type 1	Type 1	Type 1									
	Type of signal *(1)*	Sink				–		Sink	Sink	Sink									
	Type of wiring	1-, 2-, or 3-wire	1 or 2-wire	1-wire		1-, 2-, or 3-wire		1-wire	1-wire	1-wire									
	Limit values	20.4…28.8 V ⎓				100…240 V ∿	100…120 V ∿	20.4…28.8 V ⎓	20.4…28.8 V ⎓	20.4…28.8 V ⎓									
	Nominal input current	3.75 mA			2.68 mA	5 mA at 100 V ∿, 11 mA at 240 V ∿	10 mA at 120 V ∿	3.3 mA	1.3 mA	3.75 mA									
	Input impedance	6.4 kΩ			8.9 kΩ	–		7.2 kΩ	18.4 kΩ	6.4 kΩ									
	State 0	5 V ⎓ max.				–		5 V ⎓ max.	5 V ⎓ max.	5 V ⎓ max.									
	State 1	15 V ⎓ min.				–		15 V ⎓ min.	15 V ⎓ min.	15 V ⎓ min.									
Digital outputs	Number							**2**	**4**	**4**	**4**	**4**	**6**	**8**	**12**	**16**	**2**	**2**	**4**
	Nominal output voltage							24 V ⎓	24 V ⎓	24 V ⎓	24 V ⎓						100/ 240 V ∿	30 V ⎓/230 V ∿	
	Output current per channel							0.5 A	0.1 A	0.5 A	0.5 A	2 A	0.5 A	2 A	0.5 A		1 A	5 A	
	Output current per group of channels							1 A max.	0.4 A	2 A max.	2 A max.	4 A max.	3 A max.	8 A max.	6 A max.		1 A	10 A max.	
	Type of signal *(1)*							Source	Source	Source	Source						Solid state relay	Relay	
	Type of wiring							1-wire	1-wire	1-wire	1-, 2-, or 3-wire		1 or 2-wire	1-wire			3-wire	NO/NC contact	
	Limit values							20.4...28.8 V ⎓	20.4...28.8 V ⎓	20.4...28.8 V ⎓	20.4...28.8 V ⎓						80…264 V ∿	24...36 V ⎓, 184…276 V ∿	
	Short-circuit and overload protection							Yes	Yes	Yes	Yes						Yes	No	
Analog inputs	Number							**1**											
	Type							Voltage/current											
	Range							-10...+10 V DC 0…20 mA/4…20 mA											
	Resolution							12 bits + sign											
	Sampling period – Without filtering							400 ms											
	Sampling period – With filtering							1 ms max.											
Analog outputs	Number							**1**											
	Type							Voltage/current											
	Range							-10…+10 V DC 0…20 mA											
	Resolution							12 bits											
	Response time							1 ms max.											
Electronic expansion modules		**TM5SDI4D**	**TM5SDI6D**	**TM5SDI12D**	**TM5SDI16D**	**TM5SDI4A**	**TM5SDI6U**	**TM5SMM6D2L**	**TM5SDM8DTS**	**TM5SDM12DT**	**TM5S DO4T**	**TM5 SDO4TA**	**TM5 SDO6T**	**TM5 SDO8TA**	**TM5 SDO12T**	**TM5 SDO16T**	**TM5 SDO2S**	**TM5 SDO2R**	**TM5 SDO4R**
Compatible bus bases *(2)*		**TM5ACBM11, TM5ACBM15**				**TM5ACBM12**		**TM5ACBM11, TM5ACBM15**									**TM5ACBM12**		
Compatible removable terminal block *(2)*		**TM5ACTB06, TM5ACTB12**		**TM5ACTB12**	**TM5ACTB16**	**TM5ACTB32**		**TM5ACTB12**			**TM5ACTB06, TM5ACTB12**			**TM5ACTB12**		**TM5ACTB16**	**TM5ACTB32**		
Page		13				15		13									15		

(1) Source output: PNP output; Sink output: NPN output
(2) To be ordered separately

Modicon TM5

High-Performance and Safe IP20 Modular I/O System

24 V ⎓ digital and digital/analog modules

Presentation

The digital module offer comprises:

■ Input, mixed I/O, and output electronic modules (24 V ⎓ sensor and preactuator power supply): **TM5SDI●●●**, **TM5SDO●●●**

■ A mixed I/O module with timestamping and oversampling functions: **TM5SDM8DTS**. The timestamping function is used to associate a date and time with an event, and to record the time the operation was performed. **TM5SDM8DTS** electronic module was designed to be used with the PacDrive system and **TM5NS31** Sercos bus interface *(1)* only.

■ A mixed digital/analog I/O electronic module: **TM5SMM6D2L**

These modules are used to adapt as closely as possible to the application requirements to reduce installation and wiring costs.
Each digital and digital/analog module comprises three parts to be ordered separately *(2)*:
- An I/O electronic module
- A bus base
- A terminal block

These modules can be mechanically assembled before mounting on a symmetrical rail.
They offer the following advantages:
- Removable terminal block
- Spring terminals that can be used for quick, tool-free connection of the sensors and preactuators (the quality of the spring terminals avoids the need for periodic retightening)
- Hot swapping capability

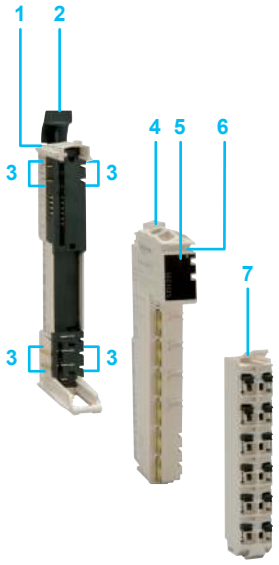

Description

TM5SD●●●● digital modules and **TM5SMM6D2L** digital/analog module comprise:

1 A bus base
2 A mechanical clip for locking onto a symmetrical rail
3 A bus expansion connection on each side of the base to provide the link with the adjacent controller or module
4 A digital input, output, or I/O electronic module
5 An LED display block for the module channels and diagnostics
6 A slot for the plain text cover holder (label holder)
7 A removable spring terminal block with locking clip and slots for colored ID markers

(1) TM5NS31 Sercos bus interface, see *page 44*
(2) Also sold as a complete kit, see *page 13*

Modicon TM5

High-Performance and Safe IP20 Modular I/O System

24 V ⎓ digital and digital/analog modules

TM5SD●●● *TM5SMM6D2L*

TM5ACBM●● *TM5ACTB●●*

TM5SD●12DK

TM5ACTCH100

TM5ACTLC100

TM5ACLPL10 *TM5ACLPR10*

References

Description	Number and type of channels (1)	Reference	Weight kg/*lb*
24 V ⎓ digital input electronic modules	4 sink inputs	TM5SDI4D	0.025/ *0.055*
	6 sink inputs	TM5SDI6D	
	12 sink inputs	TM5SDI12D	
	16 sink inputs	TM5SDI16D	
Mixed I/O electronic modules	4 x 24 V ⎓ digital inputs 4 source transistor outputs, 0.1 A per channel, with timestamping and oversampling functions	TM5SDM8DTS For use with PacDrive system and TM5NS31 Sercos bus interface only	0.022/ *0.048*
	8 sink inputs 4 source transistor outputs	TM5SDM12DT	0.025/ *0.055*
Digital output electronic modules	4 source transistor outputs 0.5 A per channel	TM5SDO4T	0.025/ *0.055*
	4 source transistor outputs 2 A per channel, 4 A per module	TM5SDO4TA	
	6 source transistor outputs 0.5 A per channel	TM5SDO6T	
	8 source transistor outputs 2 A per channel	TM5SDO8TA	
	12 source transistor outputs 0.5 A per channel	TM5SDO12T	
	16 source transistor outputs 0.5 A per channel	TM5SDO16T	
24 V ⎓ digital/analog I/O electronic module	- 4 digital sink inputs - 1 analog input, -10..+10 V DC, 0…20 mA/4…20 mA - 2 source transistor outputs, 0.5 A per channel - 1 analog output, 0…20 mA	TM5SMM6D2L	0.025/ *0.055*

Description	Characteristics	Reference	Weight kg/*lb*
Bus bases	24 V ⎓	TM5ACBM11	0.020/ *0.044*
	24 V ⎓ With address setting	TM5ACBM15	0.020/ *0.044*
Terminal blocks	For electronic modules 6 spring terminals	TM5ACTB06	0.016/ *0.035*
	For electronic modules 12 spring terminals	TM5ACTB12	0.020/ *0.044*
	For electronic modules 16 spring terminals	TM5ACTB16	0.020/ *0.044*

Digital I/O expansion module kits

Description	Composition	Reference	Weight kg/*lb*
Kit comprising: - a digital input or output electronic module - a bus base - a terminal block	TM5SDI12D + TM5ACBM11 + TM5ACTB12	TM5SDI12DK	0.065/ *0.143*
	TM5SDO12T + TM5ACBM11 + TM5ACTB12	TM5SDO12TK	

Accessories

Description	Color	Use	Sold in lots of	Unit reference	Weight kg/*lb*
Plain text cover holder (label-holder)	Transparent	For labeling the I/O channels on the terminal blocks	100	TM5ACTCH100	0.002/ *0.004*
Plain text cover holder locking clip *(to be ordered with plain text cover holder TM5ACTCH100)*	Transparent	For locking the plain text cover holder TM5ACTCH100	100	TM5ACTLC100	0.001/ *0.002*
Precut legend strips of paper (A4 format)	White	Plain text cover holder TM5ACTCH100	100	TM5ACTLS100	0.001/ *0.002*
Retaining plates for bus bases	White	Held on the left side	10	TM5ACLPL10	0.004/ *0.009*
		Held on the right side	10	TM5ACLPR10	0.004/ *0.009*

(1) Source output: PNP output; Sink output: NPN output

Modicon TM5

High-Performance and Safe IP20 Modular I/O System

100/240 V ∿ digital modules

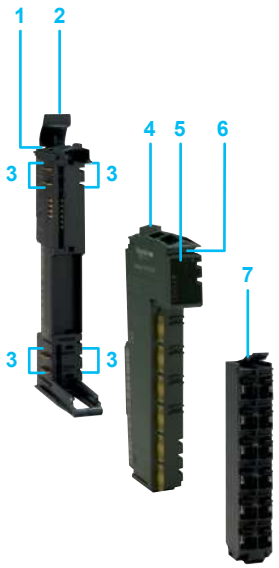

Presentation

TM5SD●●● digital module offer comprises:

- Digital input electronic modules (100/240 V ∿ sensor/preactuator power supply)
- Digital output electronic modules (100/240 V ∿ sensor/preactuator power supply)

These modules are used to adapt as closely as possible to the application requirements to reduce installation and wiring costs.
Each digital module comprises three parts to be ordered separately *(1)*:

- An I/O electronic module
- A bus base
- A terminal block

These modules can be mechanically assembled before mounting on a symmetrical rail.
They offer the following advantages:

- Removable terminal block
- Spring terminals that can be used for quick, tool-free connection of the sensors and preactuators (the quality of the spring terminals avoids the need for periodic retightening)
- Hot swapping capability

Description

TM5SD●●● digital modules comprise:

1. A bus base
2. A mechanical clip for locking onto a symmetrical rail
3. A bus expansion connection on each side of the base to provide the link with the adjacent controller or module
4. A digital input or output electronic module
5. An LED display block for the module channels and diagnostics
6. A slot for the plain text cover holder (label holder)
7. A removable spring terminal block with locking clip and slots for colored ID markers

(1) Also sold as a complete kit, see *page 15*

Modicon TM5

High-Performance and Safe IP20 Modular I/O System

100/240 V ∿ digital modules

TM5SDI●●
TM5SDO●●

TM5ACBM●●

TM5ACTB●●

TM5SDO4RK

References

Description	Number and type of channels (1)	Reference	Weight kg/*lb*
Multi-voltage digital input electronic modules	4 inputs, 100/240 V ∿	TM5SDI4A	0.025/ *0.055*
	6 inputs, 100/120 V ∿	TM5SDI6U	0.025/ *0.055*
Digital output electronic modules	2 transistor outputs, 1 A 100/240 V ∿	TM5SDO2S	0.025/ *0.055*
	2 relay outputs, 5 A, NO/NC contact 30 V ⎓/230 V ∿	TM5SDO2R	0.025/ *0.055*
	4 relay outputs, 5 A, NO/NC contact 30 V ⎓/230 V ∿	TM5SDO4R	0.025/ *0.055*
Bus bases	240 V ∿	TM5ACBM12	0.020/ *0.044*
Terminal blocks	For digital I/O electronic module 12 spring terminals	TM5ACTB32	0.025/ *0.055*

Digital output expansion module kits

Description	Composition	Reference	Weight kg/*lb*
Kit comprising**:** - a digital output electronic module - a bus base - a terminal block	TM5SDO4R + TM5ACBM12 + TM5ACTB32	TM5SDO4RK	0.070/ *0.154*

Accessories

See page 13

(1) Source output: PNP output; Sink output: NPN output

Modicon TM5

High-Performance and Safe IP20 Modular I/O System

24 V ⎓ digital compact blocks

Applications		**20 to 42 digital I/O**		
Compatibility	Local and remote I/O	■ Modicon M258 logic controller ■ Modicon LMC058 motion controller		
	Distributed I/O	■ **Ethernet net**work interface module ■ **CANopen** bus interface module ■ **Sercos** bus interface module		
Channel connection		Via removable spring terminal blocks supplied with the block		
Digital inputs	Number	**12**	**24**	**24**
	Nominal input voltage	24 V ⎓	24 V ⎓	24 V ⎓
	IEC/EN 61131-2 conformity	Type 1	Type 1	Type 1
	Type of signal *(1)*	Sink	Sink	Sink
	Type of wiring	3-wire	1-wire	1-wire
	Limit values	20.4…28.8 V ⎓	20.4…28.8 V ⎓	20.4…28.8 V ⎓
	Nominal input current	3.75 mA	3.75 mA	3.75 mA
	Input impedance	6.4 kΩ	6.4 kΩ	6.4 kΩ
	State 0	5 V ⎓ max.	5 V ⎓ max.	5 V ⎓ max.
	State 1	15 V ⎓ min.	15 V ⎓ min.	15 V ⎓ min.
Digital outputs	Number	**8**, transistor	**12**, relay with NO contact	**18**, transistor
	Nominal output voltage	24 V ⎓	24 V ⎓	24 V ⎓
	Output current per channel	0.5 A	0.5 A	0.5 A
	Output current per group of channels	1 A max.	5 A max.	2 A max.
	Type of signal *(1)*	Source	Source	Source
	Type of wiring	3-wire	1-, 2-, or 3-wire	2-wire
	Limit values	20.4…28.8 V ⎓	20.4…28.8 V ⎓	20.4…28.8 V ⎓
	Short-circuit and overload protection	Yes	Yes	Yes
Modicon TM5 compact blocks		**TM5C12D8T**	**TM5C24D12R**	**TM5C24D18T**
Page		17		

(1) Source output: PNP output; Sink output: NPN output

Schneider Electric

Modicon TM5

High-Performance and Safe IP20 Modular I/O System

24 V ⎓ digital compact blocks

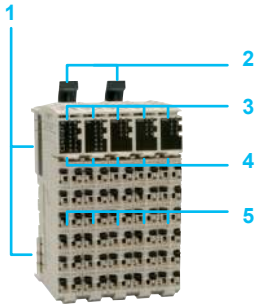

TM5C12D8T

TM5C24D12R

TM5C24D18T

Presentation

TM5C●●●● compact blocks offer a cost-effective solution for expanding control system I/O configurations.
They consist of a block containing the circuit boards, bus bases, and **TM5ACTB12** removable terminal blocks.

- They are a cost-effective way of creating configurations that require a large number of digital channels.
- Regardless of which compact block is chosen, the format is the same and corresponds to five I/O expansion modules.

Description

TM5C●●●● compact blocks comprise:

1. A bus expansion connection on each side of the base to provide the link with the adjacent controller or block
2. Two mechanical clips for locking onto a symmetrical rail
3. Five LED display blocks for the compact block's channels and diagnostics
4. Five slots for the plain text cover holder (label-holder)
5. Five removable spring terminal blocks, each with locking clip and slots for colored ID markers (supplied with the compact blocks)

References

Description	Number of I/O	Inputs	Outputs *(1)*	Reference	Weight kg/*lb*
Digital I/O compact blocks	**20 I/O**	12 digital inputs, 24 V ⎓, Sink, 3-wire	8 digital outputs, transistor, 3-wire, 24 V ⎓, Source, 0.5 A	TM5C12D8T	0.037/ *0.082*
	36 I/O	24 digital inputs, 24 V ⎓, Sink, 1-wire, 0.5 A max.	12 digital outputs, 5 A relay, with NO contact, 30 V ⎓/ 230 V ∿	TM5C24D12R	0.037/ *0.082*
	42 I/O	24 digital inputs, 24 V ⎓, Sink, 1-wire	18 digital outputs, transistor, 24 V ⎓, Source, 0.5 A, 2-wire	TM5C24D18T	0.037/ *0.082*

Accessories

See page 13

(1) Source output: PNP output; Sink output: NPN output

Modicon TM5

High-Performance and Safe IP20 Modular I/O System

Analog modules

Applications		**1 to 6 analog input channels**										**2 to 4 analog output channels**			
Compatibility	Local and remote I/O	■ Modicon M258 logic controller ■ Modicon LMC058 motion controller													
	Distributed I/O with bus coupler	■ **Ethernet net**work interface module ■ **CANopen** bus interface module ■ **Sercos** bus interface module													
Channel connection		Via removable spring terminal blocks (to be ordered separately)						Via removable spring terminal blocks (to be ordered separately)						
Analog inputs	Number	**2**	**2**	**4**	**4**	**2**	**4**	**2**	**6**	**1**				
	Type	Voltage/current				Pt100/Pt1000 temperature probe		Thermocouple (J, K, S, N)		Full bridge strain gage				
	Range	-10…+10 V DC 0…20 mA/ 4…20 mA	-10…+10 V DC 0…20 mA	-10…+10 V DC 0…20 mA/ 4…20 mA	-10…+10 V DC 0…20 mA	-200…+850 °C/ *-328...+1,562 °F*		Type J: -210…+1,200 °C *(-346...2,192 °F)* Type K: -270…+1,372 °C *(-454...+2,502 °F)* Type S: -50…+1,768 °C *(-50...+3,214 °F)* Type N: -270…+1,300 °C *(-454...+2,372 °F)*		Differential: 85…5,000 Ω				
	Resolution	12 bits + sign	15 bits + sign	12 bits + sign	15 bits + sign	16 bits		16 bits		24 bits				
	Sampling period – Without filtering	300 µs	–	400 µs	–	–		–		–				
	Sampling period – With filtering	1 ms	50 µs	1 ms	50 µs	–		–		–				
Analog outputs	Number										**2**	**2**	**4**	**4**
	Type										Voltage/current			
	Range										-10…+10 V DC, 0…20 mA			
	Resolution										12 bits + sign	15 bits + sign	12 bits + sign	15 bits + sign
	Response time										1 ms max.			
Digital inputs	Number and type													
	Nominal input voltage													
	IEC/EN 61131-2 conformity													
	Type of signal *(1)*													
	Type of wiring													
	Limit values													
	Nominal input current													
	Input impedance													
	State 0													
	State 1													
Digital outputs	Number													
	Nominal output voltage													
	Output current per channel													
	Output current per group of channels													
	Type of signal *(1)*													
	Type of wiring													
	Limit values													
	Short-circuit and overload protection													
Power supply		Internal						Internal		Internal	Internal			
Isolation	Channel-to-channel	Non-isolated						Non-isolated		Non-isolated	Non-isolated			
	Between groups of channels	–						–		–	–			
	Between channels and bus	500 V ∿ RMS						500 V ∿ RMS		500 V ∿ RMS	500 V ∿ RMS			
Electronic modules		**TM5SAI2L**	**TM5SAI2H**	**TM5SAI4L**	**TM5SAI4H**	**TM5SAI2PH**	**TM5SAI4PH**	**TM5SAI2TH**	**TM5SAI6TH**	**TM5SEAISG**	**TM5SAO2L**	**TM5SAO2H**	**TM5SAO4L**	**TM5SAO4H**
Compatible bus bases *(2)*		**TM5ACBM11, TM5ACBM15**						**TM5ACBM11, TM5ACBM15**						
Compatible removable terminal block *(2)*		**TM5ACTB06, TM5ACTB12**		**TM5ACTB12**		**TM5ACTB06, TM5ACTB12**	**TM5ACTB12**	**TM5ACTB06, TM5ACTB12**		**TM5ACTB12**	**TM5ACTB06, TM5ACTB12**		**TM5ACTB12**	
Page		13						13						

(1) Source output: PNP output; Sink output: NPN output
(2) To be ordered separately

Presentation

TM5SAI●● and **TM5SEIAISG** analog input modules are used to acquire various analog values encountered in industrial applications.
TM5SAO●●● analog output modules are used to control preactuators in physical units, such as variable speed drives or valves, and applications where process control is required. The output current or voltage is proportional to the numerical value defined by the user program.
When the controller stops, the outputs can be configured to fall back (set to the low scale value or held at their value). This function, when set to 'hold', is useful when debugging the application or when a fault occurs, so as not to disturb the process being controlled.
Depending on the application requirements, these modules are available with 12-, 16-, or 24-bit resolution.
Each analog module comprises three parts to be ordered separately *(1)*:
- An input or output electronic module
- A bus base
- A terminal block

These modules can be mechanically assembled before mounting on a symmetrical rail.
They offer the following advantages:
- Removable terminal block
- Spring terminals that can be used for quick, tool-free connection of the sensors and preactuators (the quality of the spring terminals avoids the need for periodic retightening)
- Hot swapping capability

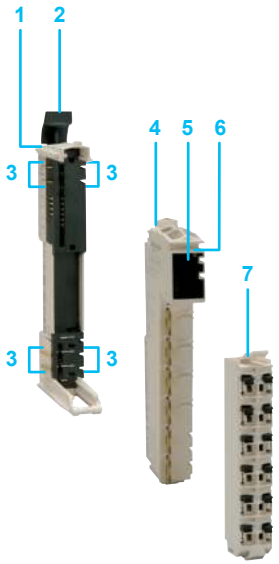

Description

The analog modules comprise:
1 A bus base
2 A mechanical clip for locking onto a symmetrical rail
3 A bus expansion connection on each side of the base to provide the link with the adjacent controller or module
4 An analog input or output electronic module
5 An LED display block for the module channels and diagnostics
6 A slot for the plain text cover holder (label holder)
7 A removable spring terminal block with locking clip and slots for colored ID markers

(1) Also sold as a complete kit, see *page 13*

Modicon TM5

High-Performance and Safe IP20 Modular I/O System

Analog modules

TM5SAI●●

TM5SAO●●

TM5SAO●●

TM5ACBM●●

TM5ACTB●●

TM5SA●4●K

References

Description	Number and type of channels	Range	Resolution	Reference	Weight kg/*lb*
Analog input electronic modules	**2 voltage/current inputs**	-10…+10 V DC, 0…20 mA/4…20 mA	12 bits + sign	TM5SAI2L	0.025/ *0.055*
		-10…+10 V DC, 0…20 mA	15 bits + sign	TM5SAI2H	
	4 voltage/current inputs	-0…+10 V DC, 0…20 mA/4…20 mA	12 bits + sign	TM5SAI4L	
		-10…+10 V DC, 0…20 mA	15 bits + sign	TM5SAI4H	
	2 Pt100/Pt1000 temperature probe inputs	-200…+850 °C *(-328...+1,562 °F)*	16 bits	TM5SAI2PH	
	4 Pt100/Pt1000 temperature probe inputs		16 bits	TM5SAI4PH	
	2 thermocouple inputs (J, K, S, N)	Type J: -210…+1,200 °C *(-346...2,192 °F)* Type K: -270…+1,372 °C *(-454...+2,502 °F)* Type S: -50…+1,768 °C *(-50...+3,214 °F)* Type N: -270…+1,300 °C *(-454...+2,372 °F)*	16 bits	TM5SAI2TH	
	6 thermocouple inputs (J, K, S, N)		16 bits	TM5SAI6TH	
	1 full bridge strain gage input	Differential: 85…5,000 Ω	24 bits	TM5SEAISG	
Analog output electronic modules	**2 voltage/current outputs**	-10…+10 V DC, 0…20 mA	12 bits + sign	TM5SAO2L	0.025/ *0.055*
			15 bits + sign	TM5SAO2H	
	4 voltage/current outputs	-10…+10 V DC, 0…20 mA	12 bits + sign	TM5SAO4L	
			15 bits + sign	TM5SAO4H	

Description	Characteristics	Reference	Weight kg/*lb*
Bus bases	24 V ⎓	TM5ACBM11	0.020/ *0.044*
	24 V ⎓ With address setting	TM5ACBM15	0.020/ *0.044*
Terminal blocks	For analog I/O electronic module 6 spring terminals	TM5ACTB06	0.016/ *0.035*
	For analog I/O electronic module 12 spring terminals	TM5ACTB12	0.020/ *0.044*

Analog I/O expansion module kits

Description	Composition	Reference	Weight kg/*lb*
Kit comprising: - an analog input or output electronic module - a bus base - a terminal block	TM5SAI4L + TM5ACBM11 + TM5ACTB12	TM5SAI4LK	0.075/ *0.165*
	TM5SAI4H + TM5ACBM11 + TM5ACTB12	TM5SAI4PHK	
	TM5SAO4L + TM5ACBM11 + TM5ACTB12	TM5SAO4LK	

Accessories

See page 13

Modicon TM5

High-Performance and Safe IP20 Modular I/O System

Counter modules

Applications		**Upcounting, downcounting, period meter, frequency meter, frequency generator, axis following with encoder**		**Upcounting, downcounting, period meter, frequency meter, frequency generator, axis following with encoder**				
Compatibility	Local and remote I/O	–	–	–	■ Modicon M258 logic controller ■ Modicon LMC058 motion controller		–	–
	Distributed I/O	**Sercos** bus interface module *(1)*	**Sercos** bus interface module *(1)*	**Sercos** bus interface module *(1)*	■ **Ethernet net**work interface module ■ **CANopen** bus interface module ■ **Sercos** bus interface module		**Sercos** bus interface module *(1)*	**Sercos** bus interface module *(1)*
Channel connection		Via removable spring terminal blocks (to be ordered separately)		Via removable spring terminal blocks (to be ordered separately)				
Number of counter channels		2	1	2	1	1	1	1
IEC/EN 61131-2 conformity		Type 1	Incremental	Incremental	Incremental	SSI absolute	Incremental	Incremental
Type of signal *(2)*		Sink	Sink	Sink	RS422, Sink	Sink	Sink	Sink
Type of input		1-, 2-, or 3-wire	–	–	–	–	3-wire	3-wire
Nominal input voltage		24 V ⎓	24 V ⎓, asymmetrical	24 V ⎓, asymmetrical	5 V ⎓, symmetrical	5 V ⎓, symmetrical	5 V ⎓, symmetrical	5 V ⎓, symmetrical
Voltage limit values		20.4…28.8 V ⎓	–	–	20.4…28.8 V ⎓	20.4…28.8 V ⎓	20.4…28.8 V ⎓	20.4…28.8 V ⎓
Frequency per channel		50 kHz	100 kHz	100 kHz	250 kHz	1 MHz	4 MHz	4 MHz
Resolution		–	16/32 bits	16/32 bits	16/32 bits	32 bits	16/32 bits	16/32 bits
Functions		Event counting Interval measurement	2 x 24 V ⎓ auxiliary inputs 24 V ⎓ encoder power supply	2 x 24 V ⎓ auxiliary inputs 24 V ⎓ encoder power supply	2 x 24 V ⎓ auxiliary inputs	2 x 24 V ⎓ auxiliary inputs	1 encoder emulation channel (A/B) with reference pulse	1 ABR incremental encoder, 5 V
Counter modules		**TM5SDI2DF**	**TM5SE1IC01024**	**TM5SE2IC01024**	**TM5SE1IC02505**	**TM5SE1SC10005**	**TM5SE1MISC20005**	**TM5SE1IC20005**
Compatible bus bases *(3)*		**TM5ACBM11, TM5ACBM15**		**TM5ACBM11, TM5ACBM15**				
Compatible removable terminal block *(3)*		**TM5ACTB12**		**TM5ACTB12**				
Page		25		25				

(1) PacDrive LMC Eco/Pro2 motion controllers only
(2) Source output: PNP output; Sink output: NPN output
(3) To be ordered separately

Presentation

TM5SDI12DF and **TM5SE●●●●●●●** modules are used to count the pulses generated by a sensor or to process signals from an incremental encoder, depending on the selected reference.
The breadth of the TM5 counter modules offer makes it possible to adapt the configuration to the machine's exact requirements: the counter electronic modules differ in terms of their frequency and the functions offered.
The function parameters are configured using EcoStruxure Machine Expert software.
Each TM5 counter module comprises three parts to be ordered separately:
- A counter electronic module
- A bus base
- A terminal block

These modules can be mechanically assembled before mounting on a symmetrical rail.
They offer the following advantages:
- Removable terminal block
- Spring terminals that can be used for quick, tool-free connection of the sensors and preactuators (the quality of the spring terminals avoids the need for periodic retightening)
- Hot swapping capability

Counter module compatibility		
	TM5SDI2DF **TM5SE1IC01024** **TM5SE2IC01024** **TM5SE1MISC20005** **TM5SE1IC20005**	**TM5SE1IC02505** **TM5SE1SC10005**
Local and remote I/O	–	■ Modicon M258 logic controller ■ Modicon LMC058 motion controller
Distributed I/O	■ **Sercos** bus interface module *(1)*	■ **Ethernet net**work interface module ■ **CANopen** bus interface module ■ **Sercos** bus interface module

Description

TM5 counter modules comprise:

1 A bus base
2 A mechanical clip for locking onto a symmetrical rail
3 A bus expansion connection on each side of the base to provide the link with the adjacent controller or module
4 A counter electronic module
5 An LED display block for the module channels and diagnostics
6 A slot for the plain text cover holder (label holder)
7 A removable spring terminal block with locking clip and slots for colored ID markers

(1) PacDrive LMC Eco/Pro2 motion controllers only

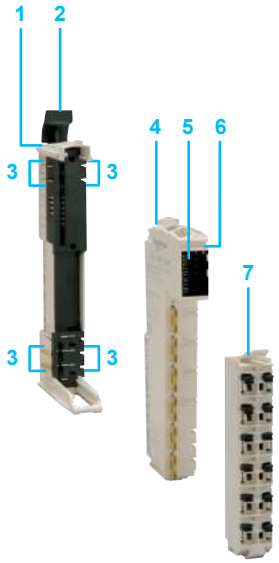

Modicon TM5

High-Performance and Safe IP20 Modular I/O System

Counter modules

TM5SDI2DF

TM5SE●●●●●●●

TM5ACBM●●

TM5ACTB●●

References

Description	Counting frequency	Number of channels Function	Reference	Weight kg/*lb*
Counter electronic modules	**50 kHz**	2 counter channels: event counting, interval measurement	**TM5SDI2DF**	0.025/ *0.055*
	100 kHz	1 incremental encoder channel 2 x 24 V ⎓ auxiliary inputs	**TM5SE1IC01024**	
	100 kHz	2 incremental encoder channels 2 x 24 V ⎓ auxiliary inputs	**TM5SE2IC01024**	
	250 kHz	1 incremental encoder channel 2 x 24 V ⎓ auxiliary inputs	**TM5SE1IC02505**	
	1 MHz	1 absolute encoder channel 2 x 24 V ⎓ auxiliary inputs	**TM5SE1SC10005**	
	4 MHz	1 encoder emulation channel (A/B) with reference pulse 2 x 24 V ⎓ auxiliary inputs	**TM5SE1MISC20005**	
	4 MHz	1 ABR incremental encoder, 5 V 2 x 24 V ⎓ auxiliary inputs	**TM5SE1IC20005**	

Description	Characteristics	Reference	Weight kg/*lb*
Bus bases	24 V ⎓	**TM5ACBM11**	0.020/ *0.044*
	24 V ⎓ With address setting	**TM5ACBM15**	0.020/ *0.044*
Terminal blocks	For counter electronic module 12 spring terminals	**TM5ACTB12**	0.020/ *0.044*

Accessories

See page 13

Presentation

Transmitter and receiver modules are used to create remote and distributed I/O islands via the TM5 expansion bus. This makes it possible to:

- Adapt the architecture as close as possible to the machine topology, and reduce wiring costs by minimizing the distance between the I/O modules and the sensors/preactuators
- Take full advantage of the TM5 expansion bus exchange performance, and save the cost of a fieldbus connection

Remote I/O modules are needed to:

- Increase the number of distributed I/O with a network interface module (Ethernet, Sercos, or CANopen) beyond 100 m/*328 ft* (1)
- Increase the number of remote I/O with a logic controller beyond 100 m/*328 ft* (1)

They are used to exchange incoming and outgoing data from the I/O expansion modules, and to maintain data exchange performance.

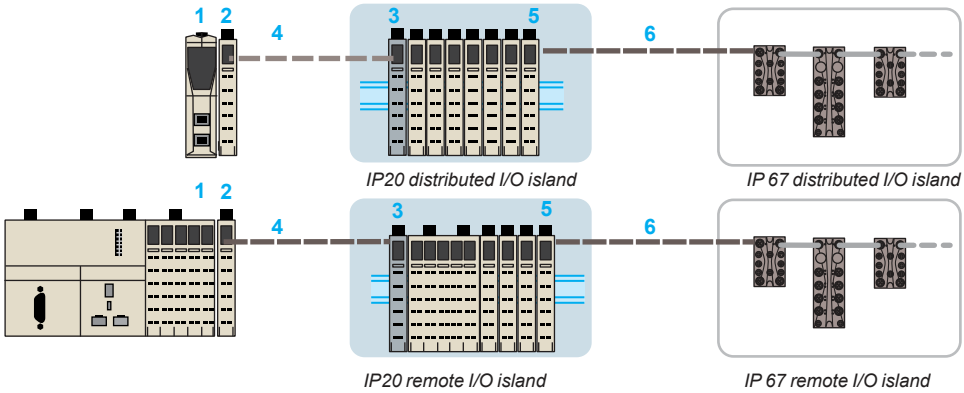

- **TM5SBET1** transmitter module (2) operates with **TM5SBER2** receiver module (3) to transmit data between IP20 I/O islands. The transmitter (2) and receiver (3) modules are physically connected via **TCSXCNNXNX100** remote I/O cable (4).
- TM5**SBET7** transmitter module (5) transmits data from an IP20 island to an IP67 island *(1)* via a TM7 expansion bus (6).

The maximum distance between two islands is 100 m *(328 ft)* and the maximum total distance is 2,500 m *(8,202 ft)*.

Each remote I/O module comprises three parts to be ordered separately:

- A remote electronic module, either transmitter or receiver
- A bus base
- A terminal block

These modules can be mechanically assembled before mounting on a symmetrical rail.

They offer the following advantages:

- Removable connector
- Spring terminals that can be used for quick, tool-free connection of the sensors and preactuators (the quality of the spring terminals avoids the need for periodic retightening)

Transmitter and receiver module compatibility

	TM5SBET1, TM5SBER2
Local and remote I/O	■ Modicon M258 logic controller ■ Modicon LMC058 motion controller
Distributed I/O	■ Ethernet network interface module ■ CANopen bus interface module ■ Sercos bus interface module

Description

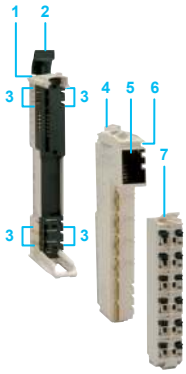

Transmitter module

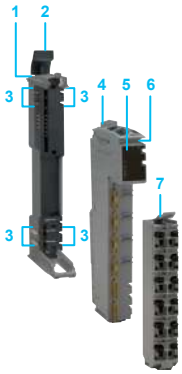

Receiver module

Transmitter and receiver modules comprise:

1 A bus base
2 A mechanical clip for locking onto a symmetrical rail
3 A bus expansion connection on each side of the base to provide the link with the adjacent controller or module
4 A remote I/O electronic module, either transmitter or receiver
5 An LED display block for the module channels and diagnostics
6 A slot for the plain text cover holder (label holder)
7 A removable spring terminal block with locking clip and slots for colored ID markers

(1) Modicon TM7, please refer to catalog ref. DIA3ED2140405EN

Modicon TM5

High-Performance and Safe IP20 Modular I/O System

Transmitter and receiver modules

TM5SBET1

TM5SBET7

TM5SBER2

TM5ACBM1●

TM5ACBM0●R

TM5ACTB●●

TM5ACTB12PS

References

Description	Characteristics	Reference	Weight kg/*lb*
Transmitter module	Electronic module for data transmission between IP 20 I/O islands	**TM5SBET1**	0.025/ *0.055*
	Electronic module for data transmission between IP 20 I/O islands and IP67 I/O islands Includes the power supply for the TM7 expansion blocks *(1)*	**TM5SBET7**	
Receiver module	Data reception electronic module Power distribution module for electronic modules and the TM5 bus, 24 V ⎓ power supply	**TM5SBER2**	
Remote I/O connection cable	Bus expansion by linking transmitter and receiver modules Length: 100 m *(328 ft)*	**TCSXCNNXNX100**	8.800/ *19.401*
Bus bases	For TM5SBET1 and TM5SBET7 transmitter modules	**TM5ACBM11**	0.020/ *0.044*
	For TM5SBET1 and TM5SBET7 transmitter modules, with address setting	**TM5ACBM15**	0.020/ *0.044*
	For TM5SBER2 receiver module	**TM5ACBM01R**	0.020/ *0.044*
	For TM5SBER2 receiver module, with address setting	**TM5ACBM05R**	0.020/ *0.044*
Terminal blocks	For TM5SBET1 transmitter module 6 spring terminals	**TM5ACTB06**	0.016/ *0.035*
	For TM5SBET1 and TM5SBET7 transmitter modules 12 spring terminals	**TM5ACTB12**	0.020/ *0.044*
	For TM5SBER2 receiver module 12 spring terminals	**TM5ACTB12PS**	0.020/ *0.044*

Accessories

See page 13

(1) Modicon TM7, please refer to catalog ref. DIA3ED2140405EN

Modicon TM5

High-Performance and Safe IP20 Modular I/O System

IO-Link master module

IO-Link

Presentation

■ IO-Link is a point-to-point industrial communications networking standard (IEC 61131-9) used for connecting digital sensors and actuators to either a type of industrial fieldbus or a type of industrial Ethernet. IO-Link offers possibilities for communication between the control and the machine level: sensors and actuators actively participate in the process within a cohesive automation network:
- transmitters independently report errors and states to PLCs
- receivers receive inverted signals and process them.

The result: cost and process optimization across the entire supply chain, across all sectors.

■ **TM5SE4IOL** IO-Link master module allows to connect intelligent devices (sensors and actuators) to the TM5 system in accordance with the IO-Link standard, and in conjunction with the TM5 Sercos or EtherNet/IP bus couplers. It transforms the devices into real communicators, offering a wide range of functions with associated setting options and status information because of their communication capability.

■ **TM5SE4IOL** IO-Link master module is designed for PacDrive LMC Eco/Pro2 motion controllers and Modicon M262 logic/motion controllers, and is suitable:
- on Sercos with Pacdrive LMC controllers,
- on Sercos and Ethernet/IP with Modicon M262 logic:motion controllers.

■ **TM5SE4IOL** is compatible with IO-Link Editor, and enables to integrate IODD files version 1.1 *(IODD: IO Device Description)*.

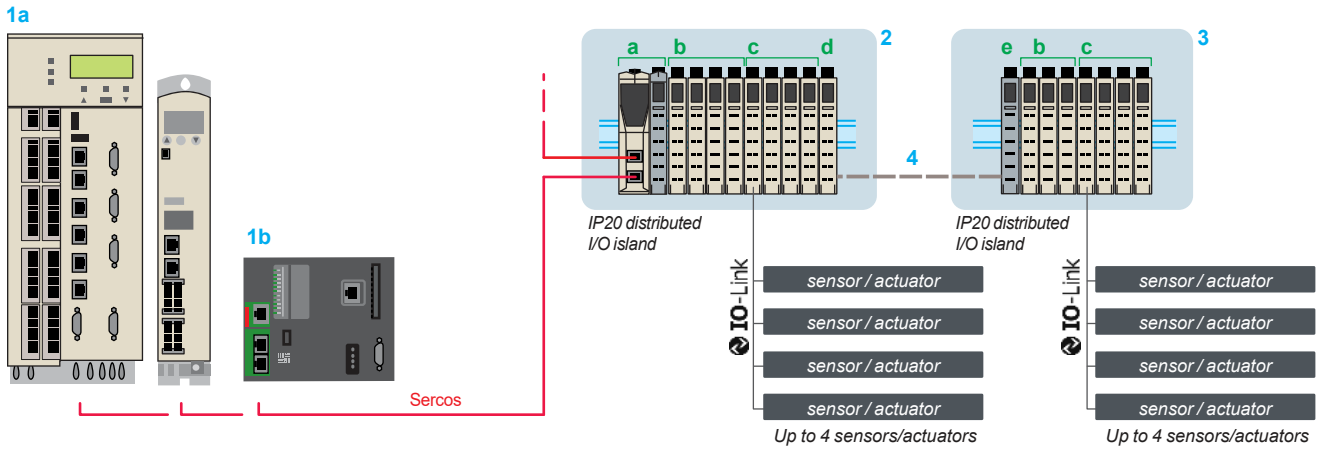

1 Sercos bus masters: a PacDrive LMC Eco/Pro2 motion controllers, b Modicon M262 logic/motion controller
2 IP20 distributed I/O island *(1)*: TM5NS31 Sercos interface module (a) + I/O modules (b) + TM5SE4IOL IO-Link master modules (c) + TM5SBET1 transmitter module (d)
3 IP20 distributed I/O island: TM5SBER2 receiver module (e) + TM5 I/O modules (b) + TM5SE4IOL IO-Link master modules (c)
4 TM5 expansion bus: TCSXCNNXNX100 remote I/O connection cable

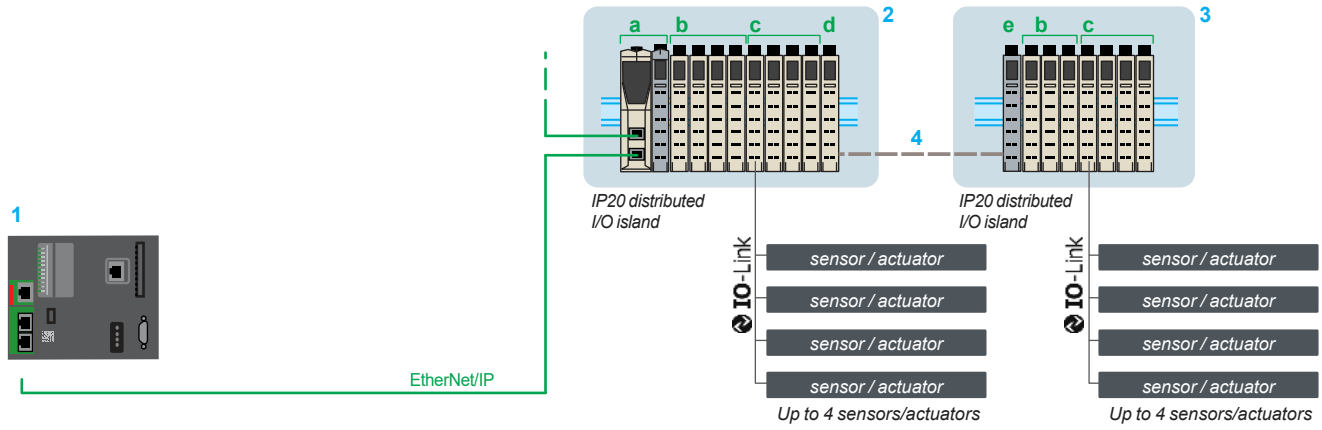

1 Ethernet network master: Modicon M262 logic/motion controller
2 TM5NEIP1 Ethernet interface module (a) + I/O modules (b) + TM5SE4IOL IO-Link master modules (c) + TM5SBET1 transmitter module (d)
3 IP20 distributed I/O island: TM5SBER2 receiver module (e) + TM5 I/O modules (b) + TM5SE4IOL IO-Link master modules (c)
4 TM5 expansion bus: TCSXCNNXNX100 remote I/O connection cable

Modicon TM5

High-Performance and Safe IP20 Modular I/O System

IO-Link master module

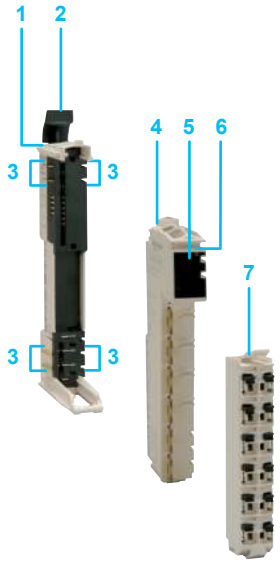

Description

TM5SE4IOL IO-Link master module comprises:

1. A bus base
2. A mechanical clip for locking onto a symmetrical rail
3. A bus expansion connection on each side of the base to provide the link with the adjacent controller or module
4. An RS232 interface electronic module
5. An LED display block for the module channels and diagnostics
6. A slot for the plain text cover holder (label holder)
7. A removable spring terminal block with locking clip and slots for colored ID markers

TM5SE4IOL

TM5ACTB12

TM5ACBM●●

References

Designation	Description	Reference	Weight kg/*lb*
IO-Link master electronic module	■ Up to four Up to 4 Sensors/actuators ■ Digital channels (configurable as input or output)	**TM5SE4IOL**	0.064/ *0.141*
Bus base	**24 V** ⎓	**TM5ACBM11**	0.020/ *0.044*
Terminal blocks	For the RS232 interface electronic module 12 spring terminals	**TM5ACTB12**	0.020/ *0.044*

Accessories

See page 13

Configuration software

EcoStruxure Machine Expert software, please refer to catalog ref. DIA3ED2180701EN

Modicon TM5

High-Performance and Safe IP20 Modular I/O System

Communication module for RS232 serial link

Presentation

TM5SE1RS2 communication module is designed for PacDrive LMC Eco/Pro2 and Modicon LMC078 motion controllers, and the Modicon M262 logic/motion controller.
It provides multiple RS232 ports on the Sercos III bus for connecting third-party devices to controllers.
TM5SE1RS2 communication module can be integrated into remote and distributed architectures.
EcoStruxure Machine Expert software provides configuration and read/write functionality.

Communication module compatibility	
	TM5SE1RS2
Local and remote I/O	■ Modicon LMC078 motion controller
Distributed I/O	■ CANopen bus interface module ■ Sercos bus interface module

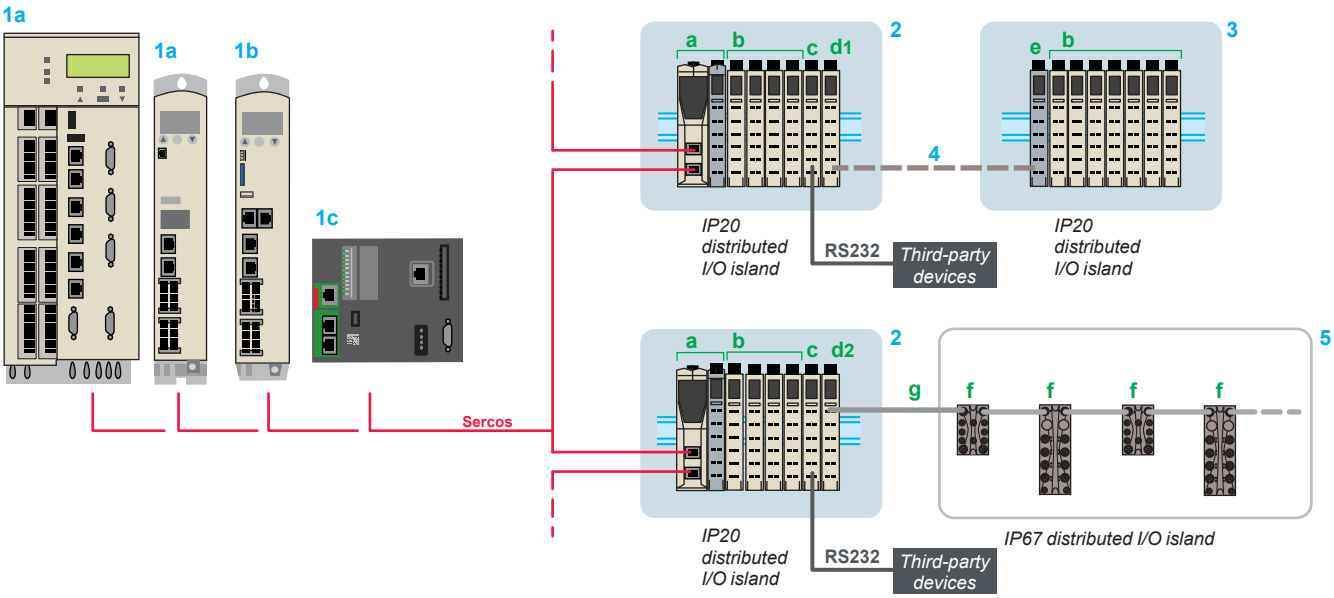

1 Sercos bus masters: **a** PacDrive LMC Eco/Pro2 motion controllers **b** Modicon LMC078 motion controller **c** Modicon M262 logic/motion controller
2 IP20 distributed I/O island *(1)*: TM5 interface module (**a**) + I/O modules (**b**) + TM5SE1RS2 communication module (**c**) + TM5SBET1 (**d1**)/TM5SBET7 (**d2**) transmitter modules
3 IP20 distributed I/O island: TM5SBER2 receiver module (**e**) + TM5 I/O modules (**b**)
4 TM5 expansion bus: TCSXCNNXNX100 remote I/O connection cable
5 IP67 distributed I/O island *(1)*: TM7 I/O blocks (digital or analog) (**e**) + TCSXCN●●●E TM7 bus expansion cable (**g**)

(1) Modicon TM7, please refer to catalog ref. DIA3ED2140405EN

Modicon TM5

High-Performance and Safe IP20 Modular I/O System

Communication module for RS232 serial link

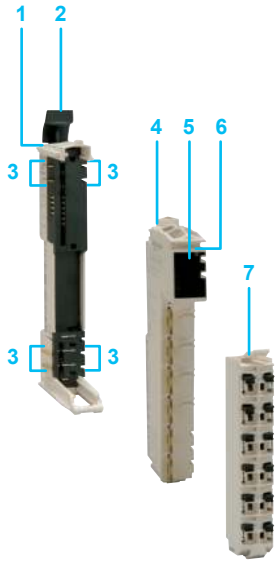

Description

TM5**SE1RS2** communication module comprises:

1 A bus base
2 A mechanical clip for locking onto a symmetrical rail
3 A bus expansion connection on each side of the base to provide the link with the adjacent controller or module
4 An RS232 interface electronic module
5 An LED display block for the module channels and diagnostics
6 A slot for the plain text cover holder (label holder)
7 A removable spring terminal block with locking clip and slots for colored ID markers

References

Designation	Description	Reference	Weight kg/*lb*
RS232 interface electronic module	- Machine Expert protocol - Physical layer: RS232 - Baud rate: 1,200 to 115,200 Kbps - Capacity: 7 or 8 data bits - Services: low/high/even, none, odd parity bit	**TM5SE1RS2**	0.064/ *0.141*
Bus base	24 V ⎓	**TM5ACBM11**	0.020/ *0.044*
Terminal blocks	For the RS232 interface electronic module 6 spring terminals	**TM5ACTB06**	0.016/ *0.035*
	For the RS232 interface electronic module 12 spring terminals	**TM5ACTB12**	0.020/ *0.044*

TM5SE1RS2

TM5ACTB●●

TM5ACBM●●

Accessories

See page 13

Configuration software

EcoStruxure Machine Expert software, please refer to catalog ref. DIA3ED2180701EN

Modicon TM5

High-Performance and Safe IP20 Modular I/O System

Common distribution modules

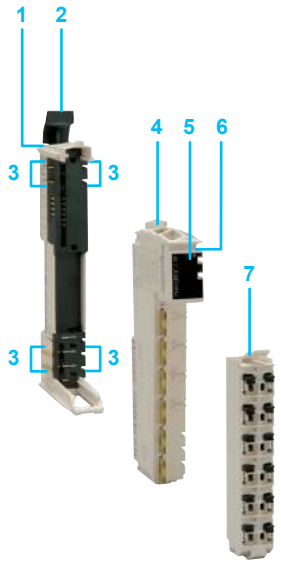

Presentation

TM5SP●●● common distribution modules make cabling more flexible by "branching" the different voltages needed to power the I/O expansion modules used.
Each common distribution module comprises three parts to be ordered separately:
- A common distribution electronic module
- A bus base
- A terminal block to be chosen according to the number of terminals

These modules can be mechanically assembled before mounting on a symmetrical rail.
They offer the following advantages:
- Removable terminal block
- Spring terminals that can be used for quick, tool-free connection of the sensors and preactuators (the quality of the spring terminals avoids the need for periodic retightening)
- Hot swapping capability

The power supply common distribution module offer comprises:

■ Common distribution electronic modules that have an integral, removable fuse

■ **TM5SD0000** non-functioning dummy electronic module, which increases the degree of flexibility in terms of managing the various options for an installation (machine with or without temperature sensors, for example). It is also used to reserve a physical slot and a logical address on the backplane bus, for adding a functioning module (such as an application-specific I/O expansion module) at a later date.

Common distribution module compatibility	
	TM5SP●●●
Local and remote I/O	■ Modicon M258 logic controller ■ Modicon LMC058 motion controller
Distributed I/O	■ Ethernet network interface module ■ CANopen bus interface module ■ Sercos bus interface module

TM5SPDG●●●

TM5ACBM●●

TM5ACTB●●

Description

TM5SP●●● common distribution modules comprise:

1 A bus base
2 A mechanical clip for locking onto a symmetrical rail
3 A bus expansion connection on each side of the base to provide the link with the adjacent controller or module
4 A power supply common distribution electronic module
5 An LED display block for the module channels and diagnostics
6 A slot for the plain text cover holder (label holder)
7 A removable spring terminal block with locking clip and slots for colored ID markers

References

Description	Characteristics	Reference	Weight kg/ *lb*
Common distribution electronic modules *(1)* **24 V ⎓**	12 x 0 V DC commons with 1 fuse	TM5SPDG12F	0.025/ *0.055*
	12 x 24 V DC commons with 1 fuse	TM5SPDD12F	0.025/ *0.055*
	6 x 0 V DC commons 6 x 24 V DC commons, with 1 fuse	TM5SPDG6D6F	0.025/ *0.055*
Dummy electronic module	Non-functioning: Used for reserving slots and logical addresses	TM5SD0000	0.015/ *0.033*
Bus bases	24 V ⎓	TM5ACBM11	0.020/ *0.044*
	24 V ⎓ With address setting	TM5ACBM15	0.020/ *0.044*
Terminal blocks	For power supply common distribution module 6 spring terminals	TM5ACTB06	0.016/ *0.035*
	For power supply common distribution module 12 spring terminals	TM5ACTB12	0.020/ *0.044*

Accessories

See page 13

(1) Equipped with 5 x 20 internal fuse, slow-blow 6.3 A

Modicon TM5

High-Performance and Safe IP20 Modular I/O System

Power distribution modules

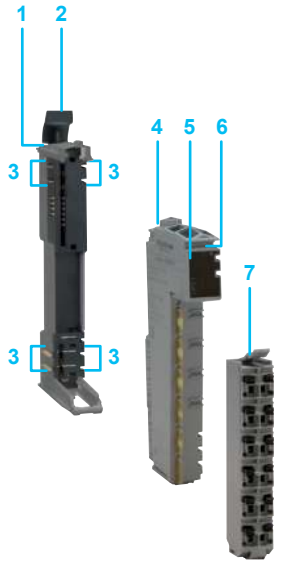

Presentation

TM5SP●● power distribution modules are designed to supply power to the I/O modules and/or the TM5 bus.
Each power distribution module comprises three parts to be ordered separately:
- A power distribution electronic module
- A bus base
- A terminal block

These modules can be mechanically assembled before mounting on a symmetrical rail.
They offer the following advantages:
- Removable terminal block
- Spring terminals that can be used for quick, tool-free connection of the sensors and preactuators (the quality of the spring terminals avoids the need for periodic retightening)

Four power distribution modules are available.

Power distribution module compatibility	
	TM5SP●●
Local and remote I/O	■ Modicon M258 logic controller ■ Modicon LMC058 motion controller
Distributed I/O	■ Ethernet network interface module ■ CANopen bus interface module ■ Sercos bus interface module

Description

TM5SP●● power distribution modules comprise:

1. A bus base
2. A mechanical clip for locking onto a symmetrical rail
3. A bus expansion connection on each side of the base to provide the link with the adjacent controller or module
4. A power distribution electronic module
5. An LED display block for the module channels and diagnostics
6. A slot for the plain text cover holder (label holder)
7. A removable spring terminal block with locking clip and slots for colored ID markers

TM5SP●●

TM5ACBM●●

TM5ACTB●●

References

Description	Characteristics	Fuse	Reference	Weight kg/*lb*
Power distribution electronic modules	24 V ⎓ power supply for the I/O modules Max. total I: 10 A	–	TM5SPS1	0.030/ *0.066*
		6.3 A internal fuse	TM5SPS1F	0.030/ *0.066*
	Power supply - for the I/O (24 V ⎓) - for the TM5 bus (bus power supply: 7 W)	–	TM5SPS2	0.030/ *0.066*
		6.3 A internal fuse	TM5SPS2F	0.030/ *0.066*
Bus bases	Isolated on the left on the 24 V ⎓ I/O module power supply		TM5ACBM01R	0.020/ *0.044*
	Isolated on the left on the 24 V ⎓ I/O module power supply With address setting		TM5ACBM05R	0.020/ *0.044*
Terminal block	For power distribution electronic module 24 V ⎓ 12 spring terminals		TM5ACTB12PS	0.020/ *0.044*

Accessories

See page 13

Modicon TM5

High-Performance and Safe IP20 Modular I/O System

Safety logic controllers and safety I/O modules

Presentation

Modicon TM5CSLC●00FS safety logic controllers are suitable for applications requiring distributed safety over the Sercos III bus:
- They can manage a group of 20 up to 100 safety nodes consisting of I/O islands, with a fastest task cycle time of 1 ms,
- They are powered in 24 V DC power supply and are equipped with two integrated shielded RJ45 ports for connecting the Sercos III bus and a memory key interface.

Architecture exemple

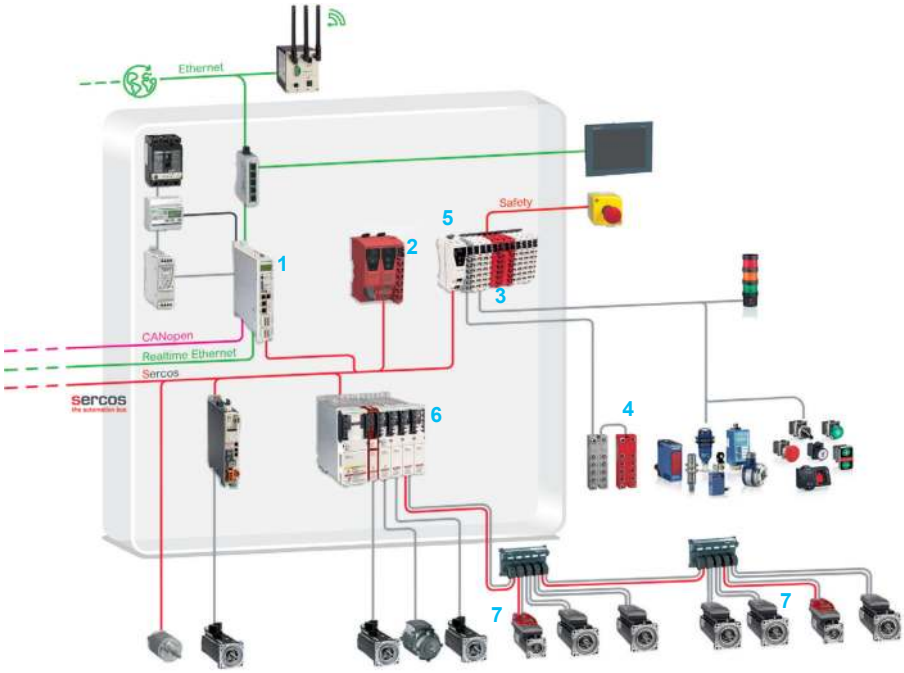

The architecture comprises:
- PacDrive LMC motion controller (1) (or a Modicon M262 motion controller) as Sercos bus master
- Modicon TM5CSLC●00FS safety logic controller (2), as Sercos slave interface: it manages the safety-related application over the Sercos III bus.
- Modicon TM5 (3) and Modicon TM7 (4) safety I/O modules: connected to Modicon TM5CSLC●00FS safety logic controllers by means of Modicon TM5 Sercos interface modules (5),
- Lexium 62 safety servo drives (6),
- Lexium 62 ILM integrated drive (7)

-

Functions

- Modicon TM5CSLC●00FS safety logic controllers provide the following functions:
  - Configuration management
  - Parameter management
  - Secure execution of the application program
  - Device assistant (used to exchange firmware on safety devices in architecture monitored by LMC motion controllers and Modicon M262 motion controllers.
  - Firmware exchange on safety devices via FDR (Fast Device Replacement) in architecture monitored by Modicon M262 motion controllers

Programming

- The safety system is programmed using **EcoStruxure Machine Expert** software, with its **Safety addon** installed. The editor is embedded into the programming environment where each hardware component is defined: Modicon LMC motion controller (or Modicon M262 motion controller), TM5CSLC●00FS safety logic controller, Modicon TM5 safety I/O modules, Modicon TM7 safety I/O blocks, Lexium 62 servo drives, Lexium 62 ILM integrated drive.
- The application program and configuration of the safety hardware are managed by the software editor. The hardware configuration remains the same as the previous hardware TM5SLC100/200: the existing configuration is reusable. Existing project updates to new via Eco Struxure Machine Expert /Safety addon with manual adjustment of safety timing parameters.

Fieldbus characteristics

Distributed I/O	Sercos bus interface module (with PacDrive LMC Eco/Pro2 logic controllers or M262 motion controller)
Interface	Internal 2x switch (2x shielded RJ45 port)
Cable length	Maximum 100 m *(328 ft)* between two safety nodes (segment length)
Transfer rate	100 Mbps, Full duplex

(1) Lexium 62, Lexium 62 ILM integrated drive, Modicon TM5 I/O modules, Modicon TM7 safety I/O blocks

Please refer to catalog ref DIA3ED2180701EN

Please refer to catalog ref DIA7ED2160305EN

Please refer to catalog ref DIA7ED2160306EN

Certifications

- Modicon TM5 embedded safety offer is certified by TÜV Nord Group up to performance level PLe according to EN ISO 13849-1, and SIL cl 3 according to IEC 61508, IEC 62061.
- Modicon TM5 safety logic controllers are certified by CSA, Class I, Div. 2, cULus, and marked CE and UKCA.

Criteria	Characteristic value
Category	Cat 4 according to EN ISO 13849
Maximum performance level	PLe according to EN ISO 13849
Maximum safety integrity level	SIL 3 according to IEC 62061
Maximum safety integrity level	SIL 3 according to IEC 61508
PFH	< $1*10^{-9}$
PFD	< $2*10^{-5}$ for a proof test interval of 20 years
PT	20 years max.
SFF	> 90%
Service life	20 years max.
DC	> 90%
MTTFd	> 100 years

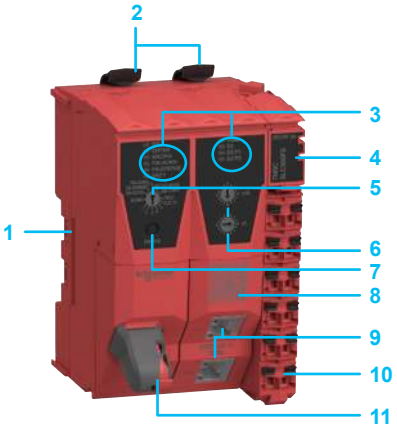

Description

1 Slot for locking plate TM5ACLPR10 *(1)*
2 Mechanical clips for locking onto a symmetrical rail (vertical or horizontal mounting)
3 Logic processor / Sercos interface LED indicators
4 Integrated power supply
5 One selection switch functions (Setup mode, Acknowledgement, ...)
6 Two Sercos address switches
7 Button for confirming a Function
8 QR code printed in front face; link to product data page
9 Two shielded RJ45 ports for Sercos 3 bus, controlled node
10 Safety removable spring terminal block (12-pin, safety coded red) TM5ACTB52FS *(1)*
11 One slot for exchangeable memory key *(2)*

References

Designation	Communication interface	I/O	Reference	Weight kg/lb
Safety logic controllers Dimensions (W x H x D): 62.5 x 99 x 75 mm (2.46 x 3.89 x 2.92 in)	2x shielded RJ45 ports for Sercos 3 bus	20 safety nodes	TM5CSLC300FS	0.208/ *0.458*
		100 safety nodes	TM5CSLC400FS	0.208/ *0.458*

Memory key for Modicon TM5 safety logic controllers

■ The memory key is required to load the program, parameters and configuration into the Modicon TM5CSLC●00FS safety logic controller when it boots up. In addition, it can be used to store the program, the parameters, and the system configuration and transfer the data to another TM5CSLC●00FS safety logic controller.

■ Its is designed with a mechanical locking mechanism to prevent unintended removal.

Designation	Description	Reference	Weight kg/lb
Memory key	8 MB	TM5ACSLCM8FS	0.013/ *0.028*

Accessories

See page 13

Programming software for Modicon TM5 safety logic controllers

EcoStruxure Machine Expert (Safety addon)	Please refer to catalog ref. DIA3ED2180701EN

(1) Accessories included in delivery of TM5CSLC300FS and TM5CSLC400FS.
(2) To be ordered separately.

TM5CSLC300FS

TM5CSLC400FS

TM5ACSLCM8FS

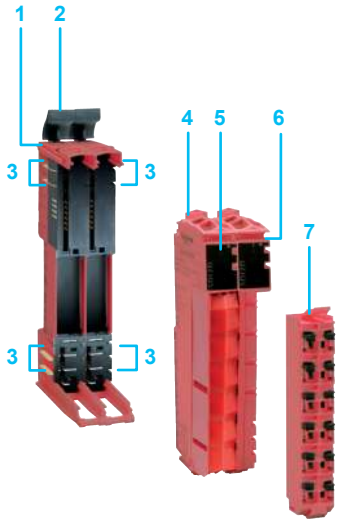

Presentation

The range of safety digital I/O expansion modules comprises:
- safety digital input and output modules
- safety analog and temperature input modules
- safety counter input modules

Each safety I/O expansion module comprises three parts to be ordered separately:
- A safety I/O electronic module
- A safety bus base
- A safety removable spring terminal block

Safety I/O module compatibility	
	TM5CSLC●00FS
Local and remote I/O	–
Distributed I/O	Sercos bus interface module (with PacDrive logic controllers or M262 logic/motion controller)

Description

Modicon TM5 safety I/O modules comprise:

1 A bus base
2 Two mechanical clips for locking onto a symmetrical rail
3 A bus expansion connection on each side of the base to provide the link with the adjacent controller or module
4 A power distribution electronic module
5 An LED display block for the module channels and diagnostics
6 A slot for the plain text cover holder (label holder)
7 A removable spring terminal block with locking clip and slots for colored ID markers

Modicon TM5

High-Performance and Safe IP20 Modular I/O System

Safety logic controllers and safety I/O modules

TM5SD●●●●●

TM5SAI4AFS
TM5STI4ATCFS

TM5SDC1FS

TM5ACBM3FS

TM5ACTB52FS
TM5ACTB5FFS

TM5SPS10FS

TM5ACBM4FS

TM5NS31

TM5SPS3

TM5ACBN1

TM5ACTB12PS

References

Designation	Description	Reference	Weight kg/*lb*
Safety digital I/O electronic modules			
Safety digital input modules	2 safety digital inputs, 24 V DC, sink	TM5SDI2DFS	0.025/ *0.055*
	4 safety digital inputs, 24 V DC, sink	TM5SDI4DFS	0.025/ *0.055*
	20 safety digital inputs, 24 V DC, sink	TM5SDI20DFS	0.059/ *0.013*
Safety mixed digital I/O modules	2 safety digital inputs, 24 V DC, sink 2 NO safety relay outputs	TM5SDM4DTRFS	0.025/ *0.055*
	6 safety digital inputs, 24 V DC, sink 2 safety digital outputs, 24 V DC, 500 mA	TM5SDM8TBFS	0.066/ *0.146*
Safety digital output modules	2 safety digital outputs, 24 V DC, transistor 0.5 A	TM5SDO2TFS	0.025/ *0.055*
	2 safety digital outputs, 24 V DC, transistor 2 A	TM5SDO2TAFS	0.025/ *0.055*
	4 safety digital outputs, 24 V DC, transistor 0.5 A	TM5SDO4TFS	0.025/ *0.055*
	4 safety digital outputs, 24 V DC, transistor 2 A	TM5SDO4TAFS	0.025/ *0.055*
	6 safety digital outputs, 24 V DC, transistor 0.2 A	TM5SDO6TBFS	0.025/ *0.055*
	2 NO safety relay outputs, 230 V AC 6 A	TM5SDO2DTRFS	0.101/ *0.223*
Safety analog input electronic modules			
Safety analog input modules	4 safety analog inputs, 0..20 mA/4..20 mA 24-bit resolution	TM5SAI4AFS	0.068/ *0.150*
	4 safety thermocouple inputs: PT100/PT1000 inputs, 24-bit resolution	TM5STI4ATCFS	0.066/ *0.146*
Safety counter electronic module			
Safety counter module	1 safety counter input, 24 V DC, sink, A-A, A-B, A-A'-B-B' wiring modes, 7 kHz maximum frequency	TM5SDC1FS	0.052/ *0.115*
Safety bus base for safety I/O electronic modules			
Safety bus base for safety I/O electronic modules	Internal interconnected I/O power supply; 0.13 W power consumption	TM5ACBM3FS	0.020/ *0.044*
Safety terminal blocks			
Safety terminal blocks	For use with TM5SDI●●●, TM5SDO●●●, TM5SDM4DTRFS and TM5SDC1FS safety modules (24 V DC power supply connected, 12-pin spring terminals, 10 A nominal current per contact)	TM5ACTB52FS	0.020/ *0.044*
	For use with PT1000 sensors on TM5STI4ATCFS module (24 V DC, 16-pin spring terminals, 10 A nominal current per contact)	TM5ACTB5EFS	0.040/ *0.088*
	For use with 4-20 mA analog inputs on TM5SAI4AFS module, digital mixed I/O TM5SDM8TBFS module and thermocouple inputs without compensation on TM5STI4ATCFS module (24 V DC, 16-pin spring terminals, 10 A nominal current per contact)	TM5ACTB5FFS	0.037/ *0.082*
Safety power distribution module			
Safety power distribution module (SPDM)	Power source for specified non-safety-related I/O modules, for use with dedicated TM5ACBM4FS safety bus base (with isolation on left) This supports the predefined safe power-off state for the connected I/O modules (24 V DC, 10 A with integrated safe cut-off function)	TM5SPS10FS	0.080/ *0.176*
Safety bus base	For use with TM5SPS10FS safety power distribution module (the internal I/O power supply is isolated on the left)	TM5ACBM4FS	0.059/ *0.130*
Interface module for distributed safety I/O on Sercos III bus			
Sercos bus interface module	Communication module for Sercos III bus	TM5NS31	0.050/ *0.110*
Power distribution electronic module	Input power supply: 24 V ⎓ for Sercos III bus, interface, and I/O expansion modules	TM5SPS3 *(1)*	0.025/ *0.055*
Bus base	For TM5NS31 and TM5SPS3 electronic modules Supplied with 2 protective plates, TM5ACPL10 and TM5ACPR10	TM5ACBN1	0.020/ *0.044*
Terminal block	12 spring terminals For TM5SPS3 electronic module	TM5ACTB12PS	0.016/ *0.035*

(1) Supplied with 2 protective plates, TM5ACPL10 and TM5ACPR10

Modicon TM5

High-Performance and Safe IP20 Modular I/O System

Interface modules for distributed I/O on network and buses

Applications		**Data exchange between a control device and fieldbus I/O**		**Data exchange between a control device and fieldbus I/O Integrated safety I/O**
Bus or network		**Ethernet network (EtherNet/IP protocol)**	**CANopen bus**	**Sercos III bus**
Compatibility		■ Modicon M241 logic controllers ■ Modicon M251 logic controllers ■ Modicon M262 logic/motion controller ■ PacDrive LMC Eco/Pro2 motion controllers	■ Modicon M258 logic controllers ■ LMC058 motion controller ■ LMC078 motion controller ■ Modicon M262 logic/motion controller ■ PacDrive LMC Eco/Pro2 motion controllers	■ LMC078 motion controller ■ Modicon M262 logic/motion controller ■ PacDrive LMC Eco/Pro2 motion controllers
Bus or network type		Industrial LAN	CAN fieldbus	Sercos III bus
Structure	Physical interface	10BASE-T/100 BASE-TX (2 isolated RJ45 connectors)	ISO 11898 (9-way SUB-D connector)	RS 485 (2 parallel RJ45 connectors)
	Access method	CSMA-CD	CSMA-MA, multi-master	Master/slave
	Data rate	10/100 Mbps	10…1,000 Kbps depending on distance	1.2…38.4 kBaud
Medium		Double shielded twisted pair via Ethernet **Modicon Switch** cabling system	Double shielded twisted pair	Double shielded twisted pair
Configuration with I/O expansion modules	Modicon TM5 modules, Modicon TM7 blocks	Digital I/O modules Analog I/O modules Common distribution modules (TM5 only)	Digital I/O modules Analog I/O modules Common distribution modules (TM5 only)	Digital I/O modules Analog I/O modules Common distribution modules (TM5 only)
	Capacity for 1 TM5 interface module	64 TM5/TM7 modules max. including: - Digital I/O: 768 I/O max. - Analog I/O: 364 I/O max.	64 TM5/TM7 modules max. including: - Digital I/O: 768 I/O max. - Analog I/O: 364 I/O max.	64 TM5/TM7 modules max. including: - Digital I/O: 768 I/O max. - Analog I/O: 364 I/O max.
	Maximum distances	- From the expansion bus (TM5 or TM7): 2,500 m *(8,202 ft)* - Between 2 TM5 module islands: 100 m *(328 ft)* - Between 2 TM7 blocks: 100 m *(328 ft)* - Between 1 TM5 module island and 1 TM7 block: 100 m *(328 ft)*	- From the expansion bus (TM5 or TM7): 2,500 m *(8,202 ft)* - Between 2 TM5 module islands: 100 m *(328 ft)* - Between 2 TM7 blocks: 100 m *(328 ft)* - Between 1 TM5 module island and 1 TM7 block: 100 m *(328 ft)*	- From the expansion bus (TM5 or TM7): 2,500 m *(8,202 ft)* - Between 2 TM5 module islands: 100 m *(328 ft)* - Between 2 TM7 blocks: 100 m *(328 ft)* - Between 1 TM5 module island and 1 TM7 block: 100 m *(328 ft)*
Certifications		CE cULus cCSAus EAC RCM	CE cULus cCSAus EAC RCM DNV-GL LR c	CE cULus cCSAus EAC RCM
Supply voltage		24 V ⎓ power supply	24 V ⎓ power supply	24 V ⎓ power supply
Interface module		**TM5NEIP1**	**TM5NCO1**	**TM5NS31**
To be ordered with	Bus base	**TM5ACBN1**	**TM5ACBN1**	**TM5ACBN1**
	Power distribution electronic module	**TM5SPS3**	**TM5SPS3**	**TM5SPS3**
	Terminal block	**TM5ACTB12PS**	**TM5ACTB12PS**	**TM5ACTB12PS**
Kit Comprising an interface module, bus base, power distribution electronic module, and terminal block		**TM5NEIP1K**	**TM5NCO1K**	**–**
Page		40	42	44

Ethernet network

EtherNet/IP

Industrial Ethernet is the term used to designate the industrial communication protocols that use standard Ethernet physical layers such as EtherNet/IP, TCP, and UDP.

It is possible to connect industrial products (industrial communication protocols), like controllers, variable speed drives, and robots, and products that use proprietary TCP/UDP-based protocols to an Industrial Ethernet network. It is also possible to use different Industrial Ethernet protocols simultaneously on the same network.

Distributed I/O over Ethernet

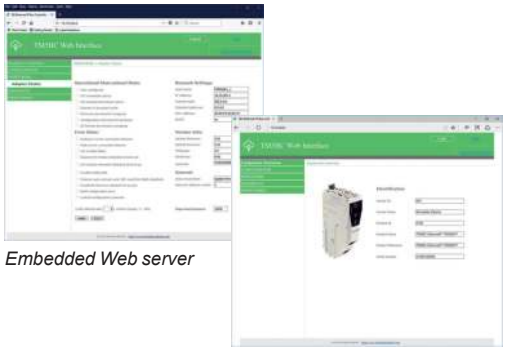

Embedded Web server

TM5NEIP1 interface module is designed for creating distributed I/O islands (IP20 and IP67) on the Ethernet network, managed by a master controller, and for exchanging data using the EtherNet/IP protocol between controllers and distributed I/O on the Ethernet network.
It is compatible with PacDrive LMC Eco/Pro2 motion controllers, Modicon M241/M251 logic controllers, and the Modicon M262 logic/motion controller.

Special features of the interface module

- Embedded Web server
- Embedded cybersecurity (Achilles L1) and user access rights management via a Web server
- Two Ethernet ports on the front of the module for communicating with the TM5 bus coupler (the second port can be connected to other devices in a daisy chain or ring topology)
  - Ethernet Adapter half duplex/full duplex service, autonegotiation, and auto-MDI/MDIX supported
  - 10/100 Mbps data exchange rate
  - DHCP client

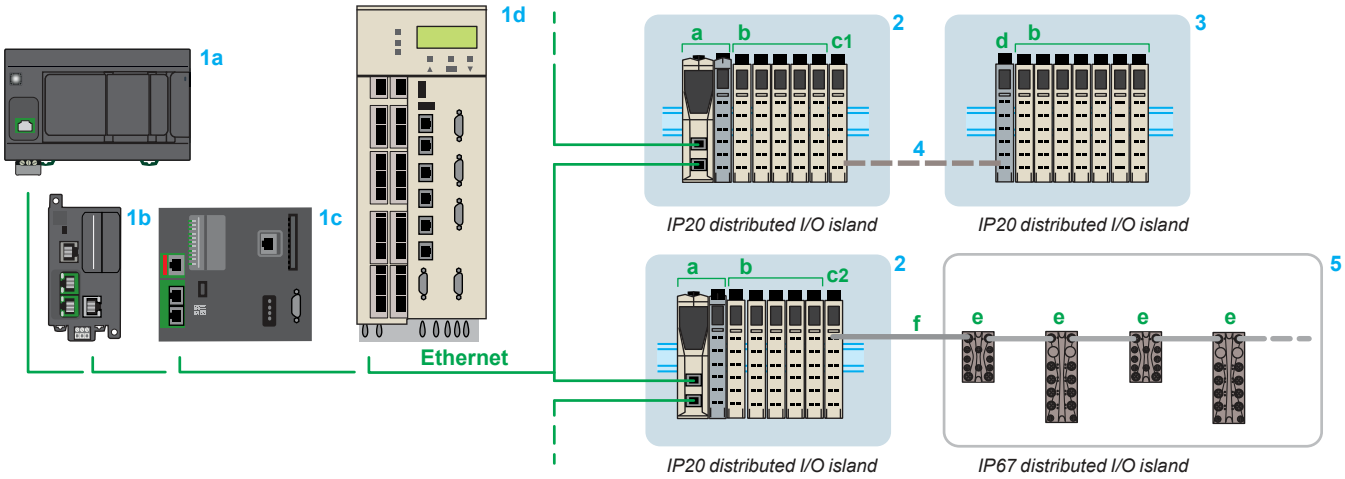

1 a Modicon M241 logic controller b Modicon M251 logic controller c Modicon M262 logic/motion controller d PacDrive LMC Eco/Pro2 motion controllers: Ethernet network masters
2 TM5 Ethernet interface module (slave) (a) + TM5 modules (b) + TM5SBET1 (c1)/TM5SBET7 (c2) transmitter modules
3 TM5SBER2 receiver module (d) + TM5 I/O modules (b)
4 TM5 expansion bus: TCSXCNNXNX100 remote I/O connection cable
5 Modicon TM7 blocks *(1)* (digital or analog I/O) (e) + TM7TCSXCN●●●E bus expansion cable (f)

(1) Modicon TM7, please refer to catalog ref. DIA3ED2140405EN

Modicon TM5

High-Performance and Safe IP20 Modular I/O System

Interface module for distributed I/O over Ethernet

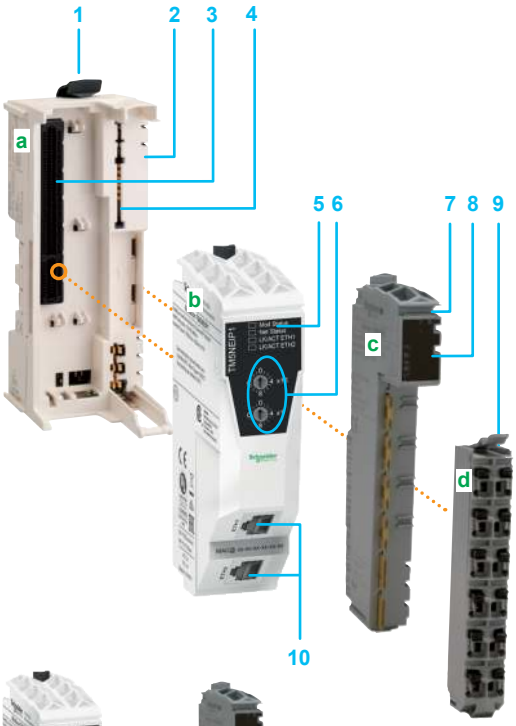

TM5NEIP1

TM5SPS3

TM5ACBN1

TM5ACTB12PS

TM5NEIP1K

Description

The Ethernet interface module comprises four parts to be ordered separately:
- a TM5ACBN1 bus base (a)
- a TM5NEIP1 network interface electronic module (b)
- a TM5SPS3 power distribution electronic module (c)
- a TM5ACTB12PS removable terminal block (d)

The Ethernet interface module can also be ordered as a complete kit comprising all these parts.
These modules can be mechanically assembled on the bus base before mounting on a symmetrical rail. They offer the following advantages:
- A removable terminal block
- Spring terminals that can be used for quick, tool-free connection of the power supply for the interface module and the I/O expansion modules (the quality of the spring terminals avoids the need for periodic retightening)

This assembly comprises:

1 A mechanical clip for locking onto a symmetrical rail
2 A bus expansion connection on the side of the base to provide the link with the adjacent module
3 A slot for the Ethernet interface module with terminals
4 A slot for the power distribution module with terminals
5 An LED display block for the interface module channels and diagnostics
6 Two rotary switches for address selection on the bus
7 A slot for the plain text cover holder (label holder)
8 An LED display block for the power distribution module channels and diagnostics
9 A removable spring terminal block with locking clip and slots for colored ID markers
10 Two RJ45 connectors for the Ethernet network connection (network connected/ network disconnected)

References

Description	Characteristics	Reference	Weight kg/*lb*
Ethernet network interface module	With EtherNet/IP protocol	TM5NEIP1	0.050/ *0.110*
Power distribution electronic module	Input power supply: 24 V ⎓ for Ethernet network, the interface, and I/O expansion modules	TM5SPS3 *(1)*	0.025/ *0.055*
Bus base	For TM5NEIP1 and TM5SPS3 electronic modules Supplied with 2 protective plates, TM5ACPL10 and TM5ACPR10	TM5ACBN1	0.020/ *0.044*
Terminal block	12 spring terminals For TM5SPS3 power distribution electronic module	TM5ACTB12PS	0.016/ *0.035*

Ethernet interface kit

Description	Composition	Reference	Weight kg/*lb*
Kit comprising: - an **Ethernet** interface module - a bus base - a power distribution electronic module - a terminal block	TM5NEIP1 + TM5SPS3 + TM5ACBN1 + TM5ACTB12PS	TM5NEIP1K	0.075/ *0.165*

Configuration software

EcoStruxure Machine Expert software, please refer to catalog ref. DIA3ED2180701EN

Accessories

See page 13

(1) Supplied with 2 protective plates, TM5ACPL10 and TM5ACPR10

Modicon TM5

High-Performance and Safe IP20 Modular I/O System

Interface module for distributed I/O on CANopen bus

CANopen bus

The CANopen fieldbus is specially designed to be integrated into control systems.
It provides openness and interoperability for various devices (drives, motor starters, smart sensors, etc.).
Having CANopen connectivity at several levels can help to reduce costs and optimize creation of the control system.
It offers the following advantages:
- Quicker wiring time
- More reliable load
- Flexibility when adding or removing devices, as well as easier installation

Distributed I/O on CANopen bus

TM5NCO1 interface module is designed for creating distributed I/O islands (IP20 and IP67) on the CANopen bus. It is compatible with Modicon M258 logic controllers, Modicon LMC058 and Modicon LMC078 motion controllers, and the Modicon M262 logic/motion controller (equipped with its **TM5NCO1** communication module for CANopen bus).

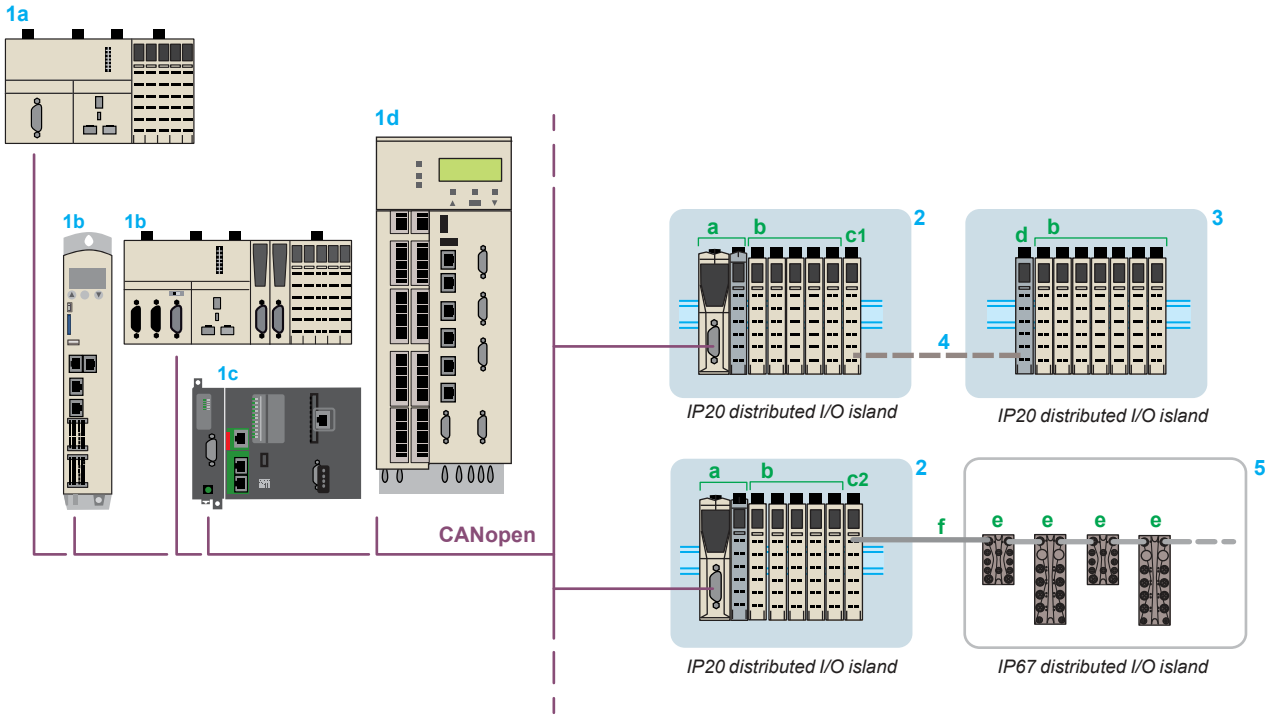

1 a M258 logic controller, b Modicon LMC058 or Modicon LMC078 motion controller, c **TMSCO1** communication module and Modicon M262 logic/motion controller, d PacDrive LMC Eco/Pro2 motion controllers: CANopen bus masters
2 TM5 CANopen interface module (slave) (a) + TM5 modules (b) + TM5SBET1 (c1)/TM5SBET7 (c2) transmitter modules
3 TM5SBER2 receiver module (d) + TM5 I/O modules (b)
4 TM5 expansion bus: TCSXCNNXNX100 remote I/O connection cable
5 Modicon TM7 blocks *(1)* (digital or analog I/O) (e) + TM7TCSXCN●●●E bus expansion cable (f)

(1) Modicon TM7, please refer to catalog ref. DIA3ED2140405EN

Modicon TM5

High-Performance and Safe IP20 Modular I/O System

Interface module for distributed I/O on CANopen bus

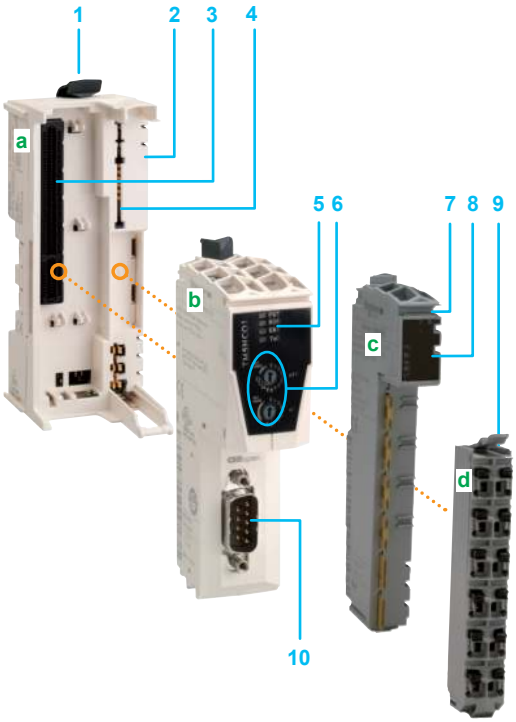

TM5NCO1

TM5SPS3

TM5ACBN1

TM5ACTB12PS

TM5NCO1K

Description

The TM5 CANopen interface module comprises four parts to be ordered separately:
- a TM5ACBN1 bus base (**a**)
- a TM5NCO1 CANopen electronic interface module (**b**)
- a TM5SPS3 power distribution electronic module (**c**)
- a TM5ACTB12PS removable terminal block (**d**)

The CANopen interface module can also be ordered as a complete kit comprising all these parts.
These modules can be mechanically assembled on the bus base before mounting on a symmetrical rail.
They offer the following advantages:
- Removable connector
- Spring terminals that can be used for quick, tool-free connection of the power supply for the interface module and the I/O expansion modules (the quality of the spring terminals avoids the need for periodic retightening)

This assembly comprises:

1 A mechanical clip for locking onto a symmetrical rail
2 A bus expansion connection on the side of the base to provide the link with the adjacent module
3 A slot for the CANopen interface module with connector
4 A slot for the power distribution module with connector
5 An LED display block for the interface module channels and diagnostics
6 Two rotary switches for address selection on the bus
7 A slot for the plain text cover holder (label holder)
8 An LED display block for the power distribution module channels and diagnostics
9 A removable spring terminal block with locking clip and slots for colored ID markers
10 A 9-way male SUB-D connector for the CANopen bus connection

References

Description	Characteristics	Reference	Weight kg/*lb*
CANopen bus interface module	With CANopen protocol	TM5NCO1	0.050/ *0.110*
Power distribution electronic module	Input power supply: 24 V ⎓ for CANopen bus, interface, and I/O expansion modules	TM5SPS3 *(1)*	0.025/ *0.055*
Bus base	For TM5NCO1 and TM5SPS3 electronic modules Supplied with 2 protective plates, TM5ACPL10 and TM5ACPR10	TM5ACBN1	0.020/ *0.044*
Terminal block	12 spring terminals For TM5SPS3 power distribution electronic module	TM5ACTB12PS	0.016/ *0.035*

CANopen interface kit

Description	Composition	Reference	Weight kg/*lb*
Kit comprising: - a **CANopen** interface module - a bus base - a power distribution electronic module - a terminal block	TM5NCO1 + TM5SPS3 + TM5ACBN1 + TM5ACTB12PS	TM5NCO1K	0.120/ *0.264*

Configuration software

■ EcoStruxure Machine Expert software, please refer to catalog ref. DIA3ED2180701EN
■ Performance distributed I/O configuration software, please visit our website www.schneider-electric.com

Accessories

See page 13

(1) Supplied with 2 protective plates, TM5ACPL10 and TM5ACPR10

Modicon TM5

High-Performance and Safe IP20 Modular I/O System

Interface module for distributed I/O on Sercos III bus

Sercos III bus

sercos
the automation bus

Fully embedded real-time communication: The Sercos III bus smooths the way for integrating safety-related control systems. It can have a line, tree, or ring topology.
Sercos is a true standard; it does not rely upon a specific manufacturer.

Distributed I/O on Sercos III bus

TM5NS31 interface module is a bus coupler, designed for creating distributed I/O islands (IP20 and IP67) on the Sercos III bus.
It is compatible with PacDrive LMC Eco/Pro2 motion controllers, and the Modicon M262 logic/motion controller.

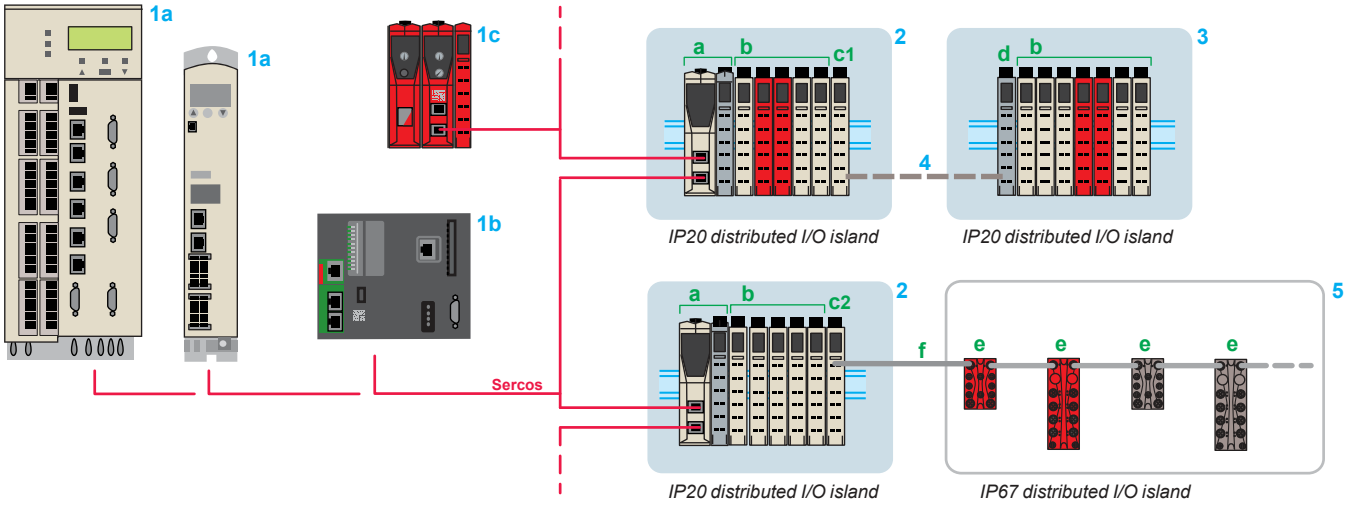

1 a PacDrive LMC Eco/Pro2 motion controllers, b Modicon M262 motion controller: Sercos bus masters, c Modicon TM5CSLC●00FS safety logic controller: Sercos bus slave
2 TM5 interface module (a) + TM5 compact block, I/O modules, safety I/O modules (b) + TM5SBET1 (c1)/TM5SBET7 (c2) transmitter modules
3 TM5SBER2 receiver module (d) + TM5 compact block or TM5 I/O modules (b)
4 TM5 expansion bus: TCSXCNNXNX100 remote I/O connection cable
5 Modicon TM7 blocks *(1)* (digital, analog, or safety I/O) (e) + TM7TCSXCN●●●E bus expansion cable (f)

(1) Modicon TM7, please refer to catalog ref. DIA3ED2140405EN

Modicon TM5

High-Performance and Safe IP20 Modular I/O System

Interface module for distributed I/O on Sercos III bus

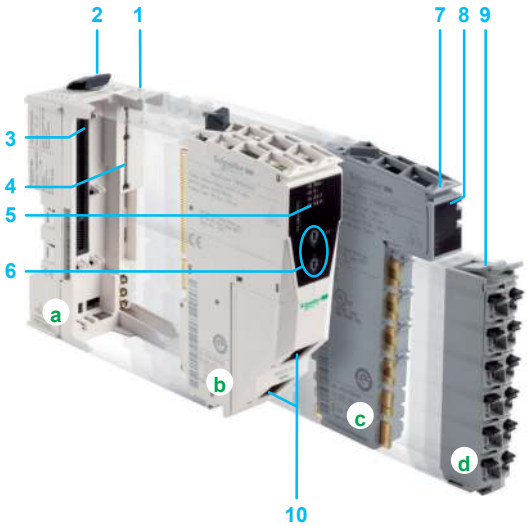

Description

The TM5 Sercos interface module comprises four parts to be ordered separately:
- a TM5ACBN1 bus base (**a**)
- a TM5NS31 interface electronic module (**b**)
- a TM5SPS3 power distribution electronic module (**c**)
- a TM5ACTB12PS removable terminal block (**d**)

These modules can be mechanically assembled on the bus base before mounting on a symmetrical rail. They offer the following advantages:
- A removable terminal block
- Spring terminals that can be used for quick, tool-free connection of the power supply for the interface module and the I/O expansion modules (the quality of the spring terminals avoids the need for periodic retightening)

This assembly comprises:

1 A bus expansion connection on the side of the base to provide the link with the adjacent module
2 A mechanical clip for locking onto a symmetrical rail
3 A slot for the Sercos interface module with terminals
4 A slot for the power distribution module with terminals
5 An LED display block for the interface module channels and diagnostics
6 Two rotary switches for address selection on the bus
7 A slot for the plain text cover holder (label holder)
8 An LED display block for the power distribution module channels and diagnostics
9 A removable spring terminal block with locking clip and slots for colored ID markers
10 Two RJ45 connectors for the Sercos bus connection (bus connected/bus disconnected)

TM5NS31

TM5SPS3

TM5ACBN1

TM5ACTB12PS

References

Description	Characteristics	Reference	Weight kg/*lb*
Sercos bus interface module	Communication module for Sercos III bus	**TM5NS31**	0.050/ *0.110*
Power distribution electronic module	Input power supply: 24 V ⎓ for Sercos bus, interface, and I/O expansion modules	**TM5SPS3** *(1)*	0.025/ *0.055*
Bus base	For TM5NS31 and TM5SPS3 electronic modules Supplied with 2 protective plates, TM5ACPL10 and TM5ACPR10	**TM5ACBN1**	0.020/ *0.044*
Terminal block	12 spring terminals For TM5SPS3 power distribution electronic module	**TM5ACTB12PS**	0.016/ *0.035*

Accessories

See page 13

Configuration software

EcoStruxure Machine Expert software, please refer to catalog ref. DIA3ED2180701EN

(1) Supplied with 2 protective plates, TM5ACPL10 and TM5ACPR10

T

TCSXCNNXNX100 27
TM5ACBM01R 27 33
TM5ACBM05R 27 33
TM5ACBM11 13 21 25 27 29 31 32
TM5ACBM12 15
TM5ACBM15 13 21 25 27 32
TM5ACBM3FS 37
TM5ACBM4FS 37
TM5ACBN1 37 39 41 43 45
TM5ACLPL10 13
TM5ACLPR10 13
TM5ACSLCM8FS 35
TM5ACTB06 13 21 27 31 32
TM5ACTB12 13 21 25 27 29 31 32
TM5ACTB12PS 27 33 37 39 41 43 45
TM5ACTB16 13
TM5ACTB32 15
TM5ACTB52FS 37
TM5ACTB5EFS 37
TM5ACTB5FFS 37
TM5ACTCH100 13
TM5ACTLC100 13
TM5ACTLS100 13
TM5C12D8T 17
TM5C24D12R 17
TM5C24D18T 17
TM5CSLC300FS 35
TM5CSLC400FS 35
TM5NCO1 43
TM5NCO1K 43
TM5NEIP1 41
TM5NEIP1K 41
TM5NS31 37 45
TM5SAI2H 21
TM5SAI2L 21
TM5SAI2PH 21
TM5SAI2TH 21
TM5SAI4AFS 37
TM5SAI4H 21
TM5SAI4L 21
TM5SAI4LK 21
TM5SAI4PH 21
TM5SAI4PHK 21
TM5SAI6TH 21
TM5SAO2H 21
TM5SAO2L 21
TM5SAO4H 21
TM5SAO4L 21
TM5SAO4LK 21
TM5SBER2 27
TM5SBET1 27
TM5SBET7 27
TM5SD0000 32
TM5SDC1FS 37
TM5SDI12D 13
TM5SDI12DK 13
TM5SDI16D 13
TM5SDI20DFS 37
TM5SDI2DF 25
TM5SDI2DFS 37
TM5SDI4A 15
TM5SDI4D 13
TM5SDI4DFS 37
TM5SDI6D 13
TM5SDI6U 15
TM5SDM12DT 13
TM5SDM4DTRFS 37
TM5SDM8DTS 13
TM5SDM8TBFS 37
TM5SDO12T 13
TM5SDO12TK 13
TM5SDO16T 13
TM5SDO2DTRFS 37
TM5SDO2R 15
TM5SDO2S 15
TM5SDO2TAFS 37
TM5SDO2TFS 37
TM5SDO4R 15
TM5SDO4RK 15
TM5SDO4T 13
TM5SDO4TA 13
TM5SDO4TAFS 37
TM5SDO4TFS 37
TM5SDO6T 13
TM5SDO6TBFS 37
TM5SDO8TA 13
TM5SE1IC01024 25
TM5SE1IC02505 25
TM5SE1IC20005 25
TM5SE1MISC20005 25
TM5SE1RS2 31
TM5SE1SC10005 25
TM5SE2IC01024 25
TM5SE4IOL 29
TM5SMM6D2L 13
TM5SPDD12F 32
TM5SPDG12F 32
TM5SPDG6D6F 32
TM5SPS1 33
TM5SPS10FS 37
TM5SPS1F 33
TM5SPS2 33
TM5SPS2F 33
TM5SPS3 37 39 41 43 45
TM5STI4ATCFS 37

Life Is On | Schneider Electric

Learn more about our products at
www.se.com

The information provided in this documentation contains general descriptions and/or technical characteristics of the performance of the products contained herein. This documentation is not intended as a substitute for and is not to be used for determining suitability or reliability of these products for specific user applications. It is the duty of any such user or integrator to perform the appropriate and complete risk analysis, evaluation and testing of the products with respect to the relevant specific application or use thereof. Neither Schneider Electric nor any of its affiliates or subsidiaries shall be responsible or liable for misuse of the information contained herein.

Design: Schneider Electric
Photos: Schneider Electric

Schneider Electric Industries SAS
Head Office
35, rue Joseph Monier - CS 30323
F-92500 Rueil-Malmaison Cedex
France

DIA3ED2131204EN
January 2023 - V5.1