Product data sheet

Specifications

analog output module, Modicon TM5, 2O, +/-10V, 0 to 20mA, 16bits

TM5SAO2H

Product availability: Non-Stock - Not normally stocked in distribution facility

Main

Range of Product	Modicon TM5
Product or Component Type	Analog output module
Product Compatibility	Logic controller Motion controller
Range Compatibility	Modicon LMC058 Modicon M258
Analogue output number	2

Complementary

Measurement resolution	305.176 µV, +/- 10 V 610.352 nA, 0...20 mA
Color	White
Response Time	<= 1 ms
Temperature coefficient	0.015 %FS/°C current 0.015 %FS/°C voltage
Supply	Internal
[Us] rated supply voltage	24 V DC -15...20 %
Sampling duration	50 ms
Analogue output type	Current 0...20 mA Voltage +/- 10 V
Response time on output	<= 1 ms
Type of Cable	Shielded cable
Measurement error	< 0.045 % of full scale +/- 10 V 25 °C < 0.045 % of full scale 0...20 mA 25 °C
Non-linearity	< 0.007 %FS/°C current < 0.007 %FS/°C voltage
Typical current consumption	2 mA 5 V DC
Power dissipation in W	1.21 W
Isolation between channels	None
Isolation between channels and bus	500 Vrms AC
Local signalling	1 LED green power supply 1 LED red power supply 2 LEDs yellow output status
Housing Colour	White
Height	3.9 in (99 mm)
Width	0.5 in (12.5 mm)

Price is “List Price” and may be subject to a trade discount – check with your local distributor or retailer for actual price.

Disclaimer: This documentation is not intended as a substitute for and is not to be used for determining suitability or reliability of these products for specific user applications

Depth	3.0 in (75 mm)
Product Weight	0.055 lb(US) (0.025 kg)

Environment

IP Degree of Protection	IP20
Marking	CE
Product certifications	CULus C-tick GOST-R CSA
Standards	CSA C22.2 No 213 UL 508 CSA C22.2 No 142 IEC 61131-2
Ambient air temperature for operation	32…131 °F (0…55 °C) without derating horizontal installation) 32…140 °F (0…60 °C) with derating factor horizontal installation) 32…122 °F (0…50 °C) vertical installation)
Ambient air temperature for storage	-13…158 °F (-25…70 °C)
Relative humidity	5…95 % without condensation
Operating altitude	0...6561.68 ft (0...2000 m)
Pollution degree	2
Vibration resistance	1 gn 8.4…150 Hz) on DIN rail 3.5 mm 5…8.4 Hz) on DIN rail
Shock resistance	15 gn 11 ms

Ordering and shipping details

Category	US1PC1222532
Discount Schedule	PC12
GTIN	3595864074801
Returnability	No
Country of origin	AT

Packing Units

Unit Type of Package 1	PCE
Nbr. of units in pkg.	1
Package 1 Height	0.7 in (1.9 cm)
Package 1 Width	2.3 in (5.9 cm)
Package 1 Length	4.09 in (10.4 cm)
Package weight(Lbs)	1.3 oz (38 g)
Unit Type of Package 2	S02
Number of Units in Package 2	42
Package 2 Height	5.9 in (15 cm)
Package 2 Width	11.8 in (30 cm)
Package 2 Length	15.7 in (40 cm)
Package 2 Weight	4.30 lb(US) (1.95 kg)

Contractual warranty

Warranty (in months)	18

Environmental Data

Schneider Electric aims to achieve Net Zero status by 2050 through supply chain partnerships, lower impact materials, and circularity via our ongoing “Use Better, Use Longer, Use Again” campaign to extend product lifetimes and recyclability.

Environmental Data explained

How we assess product sustainability

Environmental footprint

Total lifecycle Carbon footprint	**50 kg CO2 eq.**
Carbon footprint of the manufacturing phase [A1 to A3]	**1 kg CO2 eq.**
Carbon footprint of the distribution phase [A4]	**0 kg CO2 eq.**
Carbon footprint of the installation phase [A5]	**0 kg CO2 eq.**
Carbon footprint of the use phase [B2, B3, B4, B6]	**49 kg CO2 eq.**
Carbon footprint of the end-of-life phase [C1 to C4]	**0.1 kg CO2 eq.**
Environmental Disclosure	**Product Environmental Profile**

Use Better

Materials and Substances

Packaging made with recycled cardboard	**No**
Packaging without single use plastic	**Yes**
EU RoHS Directive	**Compliant**
REACh Regulation	**Free of Substances of Very High Concern above the threshold**
California proposition 65	**WARNING: This product can expose you to chemicals including: Lead and lead compounds, which is known to the State of California to cause cancer and birth defects or other reproductive harm. For more information go to www.P65Warnings.ca.gov**
PVC free	**Yes**

Use Longer

Lifetime extension

Repair	**No**

Use Again

Repack and remanufacture

Recyclability potential, in %	**0**
Circularity Profile	**End of Life Information**
Take-back	**No**
WEEE Label	**The product must be disposed on European Union markets following specific waste collection and never end up in rubbish bins.**

Dimensions Drawings

TM5 Slice

Dimensions

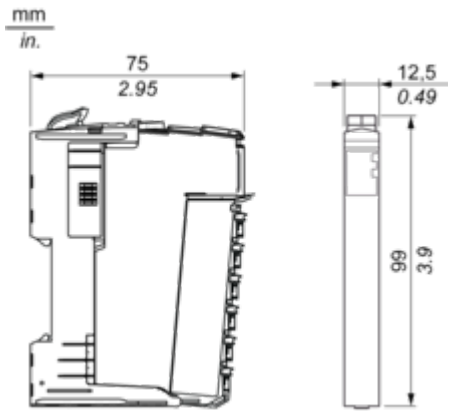

Mounting and Clearance

TM5 System

Spacing Requirements

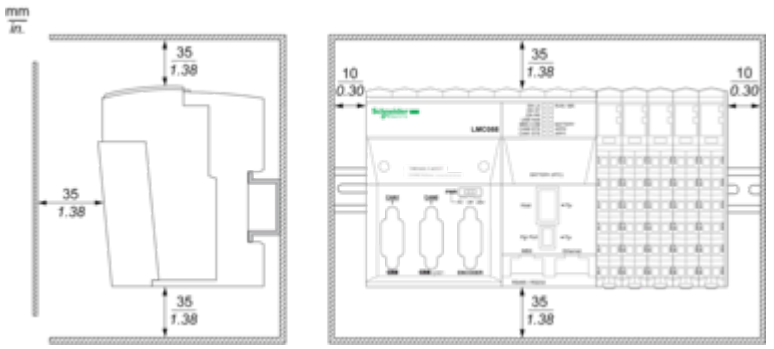

Mounting on a DIN Rail

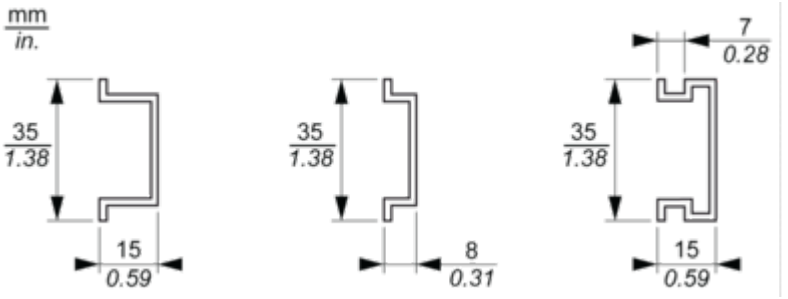

Connections and Schema

TM5 System Wiring Recommendations

Wire Sizes to Use with the Removable Spring Terminal Blocks

mm / in. 9 / 0.35				
mm²	0,08...2,5	0,25...2,5	0,25...1,5	2 x 0,25...2 x 0,75
AWG	28...14	24...14	24...16	2 x 24...2 x 18

Electronic Module 2AO ±10V/0-20mA 16 Bits

Wiring Diagram

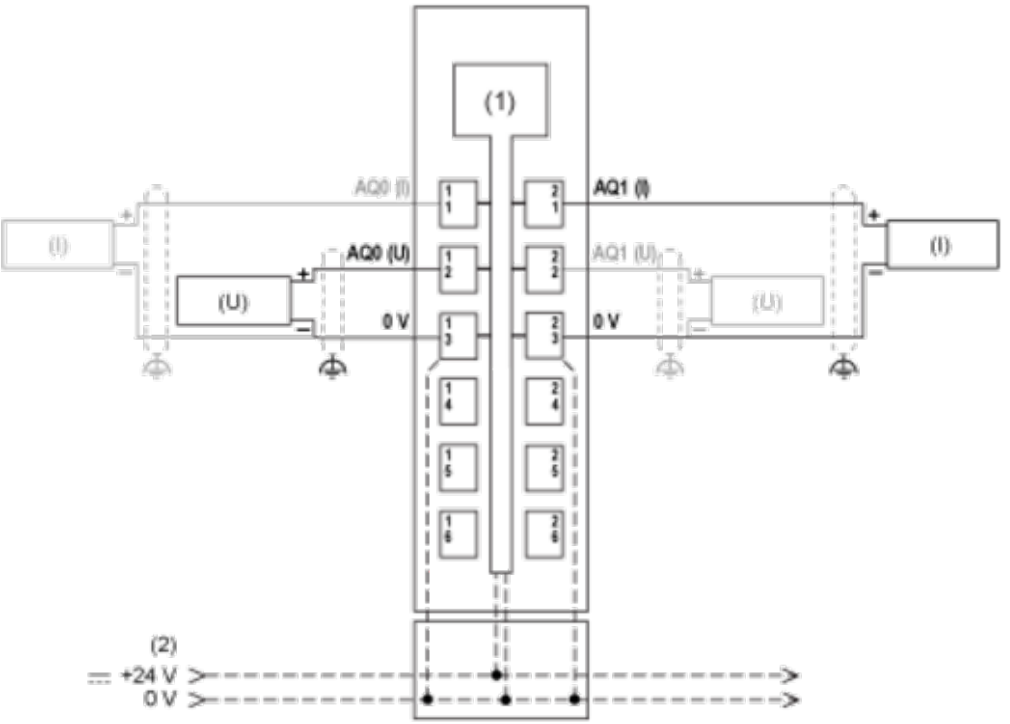

(1) Internal electronics
(2) 24 Vdc I/O power segment integrated into the bus bases
(I) Current
(U) Voltage