Modicon M173 Optimized Logic Controller

Hardware Guide

Original instructions

EIO0000005114.04
02/2026

www.se.com

Legal Information

The information provided in this document contains general descriptions, technical characteristics and/or recommendations related to products/solutions.

This document is not intended as a substitute for a detailed study or operational and site-specific development or schematic plan. It is not to be used for determining suitability or reliability of the products/solutions for specific user applications. It is the duty of any such user to perform or have any professional expert of its choice (integrator, specifier or the like) perform the appropriate and comprehensive risk analysis, evaluation and testing of the products/solutions with respect to the relevant specific application or use thereof.

The Schneider Electric brand and any trademarks of Schneider Electric SE and its subsidiaries referred to in this document are the property of Schneider Electric SE or its subsidiaries. All other brands may be trademarks of their respective owner.

This document and its content are protected under applicable copyright laws and provided for informative use only. No part of this document may be reproduced or transmitted in any form or by any means (electronic, mechanical, photocopying, recording, or otherwise), for any purpose, without the prior written permission of Schneider Electric.

Schneider Electric does not grant any right or license for commercial use of the document or its content, except for a non-exclusive and personal license to consult it on an "as is" basis.

Schneider Electric reserves the right to make changes or updates with respect to or in the content of this document or the format thereof, at any time without notice.

To the extent permitted by applicable law, no responsibility or liability is assumed by Schneider Electric and its subsidiaries for any errors or omissions in the informational content of this document, as well as any non-intended use or misuse of the content thereof.

Table of Contents

Safety Information 7
Qualification of Personnel 7
Intended Use 8
Prohibited Use 8
Liability and Residual Risks 8
Disposal 8
About the Document 9
Overview 15
M173O Range Overview 16
M173O Range Overview 16
Controller Range Overview 17
Expansion Modules Range Overview 19
Remote Display Range Overview 20
Accessories 20
Maximum Hardware Configuration 23
Global Features 24
Before Starting 25
Wiring Best Practices 29
Installation 35
TM173OB••••/TM173OD•••• / TM173ODEM22R / TM173O•••••H Controllers Mounting Positions 35
TM172E••R Expansion Modules Mounting Positions 36
Controllers and Expansion Modules Clearances 36
Top Hat Section Rail (DIN Rail) 37
Controllers and Expansion Modules Installation 40
TM172EVEVBAT Battery Backup Installation 43
TM173DLED Remote Display Installation 44
TM173OF•••• Controllers Installation 45
Controllers and Expansion Modules 47
Environmental Characteristics 48
24 Vac/Vdc Controllers Description 50
TM173ODM15R 50
TM173OBM22R 53
TM173ODM22R / TM173ODM22S 56
TM173OF•••• 59
TM173ODEM22R 61
110/240 Vac Controllers Description 64
TM173OBM22RH 64
TM173ODM22RH / TM173ODM22SH 66
TM172E••R Expansion Modules Description 69
TM172E12R 69
TM172E28R 71
Electrical Characteristics and Wiring Diagrams 73
Connectors 73
Connectors 73
Cabling Length 74
Cabling Length 74
Power Supply 74

Power Supply 74
Inputs and Outputs 77
Inputs and Outputs 77
Digital Input 77
Dry Contact Digital Inputs 77
Digital Output 78
High Voltage Relay SPST Digital Output 78
High Voltage Solid-State Relay Digital Output 80
Analog Input 81
Voltage Analog Input 83
Current Analog Input 84
NTC Analog Input 85
Resistive Analog Input (PTC/Pt1000) 86
Analog Input Used as Digital Input 87
Analog Output 88
PWM Open Collector Outputs 88
Low Voltage (SELV) Analog Outputs 89
Analog Current Output 89
Valve Output 90
Communication 91
CAN Expansion Bus Port 91
RS-485 Serial Ports 93
USB Serial Port 95
Connector to communication module 97
Battery Backup Port 97
Memory 97
Memory 97
RTC (Real Time Clock) 98
RTC (Real Time Clock) 98
Remote Display 100
Environmental Characteristics 101
Environmental Characteristics 101
Device Description 102
TM173DLED 102
User Interface 103
Displays and Icons Description 104
TM173OD•••• / TM173OF•••• / TM173ODEM22R / TM173ODM22SH / TM173ODM22RH / TM173DLED User Interface 104
TM172E••R Expansion Modules User Interface 108
Parameters 109
Parameters 110
Overview 110
Controller Parameter Table 111
Commissioning 127
Commissioning 128
General Description 128
First Commissioning 128
Connection with a PC through Modbus SL/USB 130
Connection for Expansion Module and Remote display 130
BIOS Update 131

Configure the TM173ODEM22R 133
Appendices 137
Appendices 138
NTC 10k beta 3435 Resistance Temperature Table 138
NTC 10k-2 beta (25/50) 3977 Resistance Temperature Table 139
Pt1000 Resistance Temperature Table 140
PTC Resistance Temperature Table 143
Glossary 147
Index 154

Safety Information

Important Information

Read these instructions carefully, and look at the equipment to become familiar with the device before trying to install, operate, service, or maintain it. The following special messages may appear throughout this documentation or on the equipment to warn of potential hazards or to call attention to information that clarifies or simplifies a procedure.

The addition of this symbol to a “Danger” or “Warning” safety label indicates that an electrical hazard exists which will result in personal injury if the instructions are not followed.

This is the safety alert symbol. It is used to alert you to potential personal injury hazards. Obey all safety messages that follow this symbol to avoid possible injury or death.

⚠ DANGER

DANGER indicates a hazardous situation which, if not avoided, **will result in** death or serious injury.

⚠ WARNING

WARNING indicates a hazardous situation which, if not avoided, **could result in** death or serious injury.

⚠ CAUTION

CAUTION indicates a hazardous situation which, if not avoided, **could result** in minor or moderate injury.

NOTICE

NOTICE is used to address practices not related to physical injury.

Please Note

Electrical equipment should be installed, operated, serviced, and maintained only by qualified personnel. No responsibility is assumed by Schneider Electric for any consequences arising out of the use of this material.

A qualified person is one who has skills and knowledge related to the construction and operation of electrical equipment and its installation, and has received safety training to recognize and avoid the hazards involved.

Qualification of Personnel

Only appropriately trained persons who are familiar with and understand the contents of this manual and all other pertinent product documentation are authorized to work on and with this product.

The qualified person must be able to detect possible hazards that may arise from parameterization, modifying parameter values and generally from mechanical, electrical, or electronic equipment. The qualified person must be familiar with the

standards, provisions, and regulations for the prevention of industrial accidents, which they must observe when designing and implementing the system.

Intended Use

The products described or affected by this document, together with software, accessories, and options, are controllers, intended for commercial HVAC machines according to the instructions, directions, examples, and safety information contained in the present document and other supporting documentation.

The product may only be used in compliance with all applicable safety regulations and directives, the specified requirements, and the technical data.

Prior to using the product, you must perform a risk assessment in view of the planned application. Based on the results, the appropriate safety-related measures must be implemented.

Since the product is used as a component in an overall machine or process, you must ensure the safety of persons by means of the design of this overall system.

Operate the product only with the specified cables and accessories. Use only genuine accessories and spare parts.

Any use other than the use explicitly permitted is prohibited and can result in unanticipated hazards.

Prohibited Use

Any use other than that expressed above under Intended Use, page 8 is strictly prohibited.

The relay contacts supplied are of an electromechanical type and subject to wear. Functional safety protection devices, specified in international or local standards, must be installed externally to this device.

Liability and Residual Risks

Schneider Electric liability is limited to the proper and professional use of this product under the guidelines contained in the present and other supporting documents, and does not extend to damages caused by (but not limited to):

- Unspecified installation/use and, in particular, in contravention of the safety requirements of established legislation or specified in this document;
- Use on equipment which does not provide adequate protection against electrocution, water and dust in the actual installation conditions;
- Use on equipment in which dangerous components can be accessed without the use of specific tools;
- Installation/use on equipment which does not comply with established legislation and standards.

Disposal

The appliance (or the product) must be disposed of separately in compliance with the local standards in force on waste disposal.

About the Document

Document Scope

The document describes the Modicon M173O range of logic controllers, expansion modules, remote displays, and accessories for compact HVAC&R applications. It covers technical specifications for hardware configuration, installation, wiring, environmental characteristics, communication interfaces (USB, RS-485, CAN), analog and digital I/Os, and configuration parameters. It also explains how to use EcoStruxure Machine Expert - HVAC software for programming and commissioning, and includes BIOS update procedures and module interconnection guidelines.

NOTE: Read and understand this document and all related documents, page 12 before installing, operating, or maintaining your device.

Validity Note

This document has been updated for the release of EcoStruxure Machine Expert - HVAC V1.6.0.

The characteristics of the products described in this document are intended to match the characteristics that are available on www.se.com. As part of our corporate strategy for constant improvement, we may revise the content over time to enhance clarity and accuracy. If you see a difference between the characteristics in this document and the characteristics on www.se.com, consider www.se.com to contain the latest information.

Product Related Information

⚠⚠DANGER

HAZARD OF ELECTRIC SHOCK, EXPLOSION OR ARC FLASH

- Disconnect all power from all equipment including connected devices prior to removing any covers or doors, or installing or removing any accessories, hardware, cables, or wires except under the specific conditions specified in the appropriate hardware guide for this equipment.
- Always use a properly rated voltage sensing device to confirm the power is off where and when indicated.
- Replace and secure all covers, accessories, hardware, cables, and wires and confirm that a proper ground connection exists before applying power to the unit.
- Use only the specified voltage when operating this equipment and any associated products.

Failure to follow these instructions will result in death or serious injury.

⚠ WARNING

LOSS OF CONTROL

- The designer of any control scheme must consider the potential failure modes of control paths and, for certain critical control functions, provide a means to achieve a safe state during and after a path failure. Examples of critical control functions are emergency stop and overtravel stop, power outage and restart.
- Separate or redundant control paths must be provided for critical control functions.
- System control paths may include communication links. Consideration must be given to the implications of unanticipated transmission delays or failures of the link.
- Observe all accident prevention regulations and local safety guidelines.[1]
- Each implementation of this equipment must be individually and thoroughly tested for proper operation before being placed into service.

Failure to follow these instructions can result in death, serious injury, or equipment damage.

[1] For additional information, refer to NEMA ICS 1.1 (latest edition), "Safety Guidelines for the Application, Installation, and Maintenance of Solid State Control" and to NEMA ICS 7.1 (latest edition), "Safety Standards for Construction and Guide for Selection, Installation and Operation of Adjustable-Speed Drive Systems" or their equivalent governing your particular location.

⚠ WARNING

UNINTENDED EQUIPMENT OPERATION

- Only use software approved by Schneider Electric for use with this equipment.
- Update your application program every time you change the physical hardware configuration.

Failure to follow these instructions can result in death, serious injury, or equipment damage.

Flammable Gas Refrigerants

For use with flammable gases:

- This device has been evaluated in accordance with Clause 22.116 of IEC 60335-2-40, with reference to Annex JJ (lower opening size equivalent to a circular opening with a diameter of 2.8 mm).
- This device has been evaluated with a surface temperature not exceeding 180 °C (356 °F), as required by Clause 22.117 of IEC 60335-2-40, according to the criteria of Clause 11 (normal operation).

The use and application of the information contained herein require expertise in the design and parameterizing/programming of HVAC control systems. Only you - the original equipment manufacturer, installer or user - can be aware of all the conditions and factors present, and the regulations applicable, during the design, installation and setup, operation, and maintenance of the machine or related processes. Therefore, only you can determine the suitability of automation and associated equipment, and the related safeties and interlocks, which can be effectively and properly used in the locations for which the equipment is to be put into service. When selecting the automation and control equipment - and any other related equipment or software - for a particular application, the applicable standards as set out by national regulatory bodies or the relevant certifying authorities must also be taken into consideration.

You must verify, while incorporating this controller and related equipment, the final compliance of the machine to regulations and standards when using flammable gas refrigerants. Although all statements and information contained herein are believed to be accurate and reliable, they are presented without warranty of any kind. Information provided herein does not relieve you from the responsibility of carrying out your own tests and validations of conformance to any applicable regulations.

⚠ WARNING

REGULATORY INCOMPATIBILITY

Be sure that all equipment applied and systems designed comply with applicable clauses of EN/IEC 60335-2-40 under the specific conditions specified in the appropriate hardware guide for this equipment.

Failure to follow these instructions can result in death, serious injury, or equipment damage.

General Cybersecurity Information

In recent years, the growing number of networked machines and production plants has seen a corresponding increase in the potential for cyber threats, such as unauthorized access, data breaches, and operational disruptions. You must, therefore, consider all possible cybersecurity measures to help protect assets and systems against such threats.

To help keep your Schneider Electric products secure and protected, it is in your best interest to implement the cybersecurity best practices as described in the Cybersecurity Best Practices document.

Schneider Electric provides additional information and assistance:

- Subscribe to the Schneider Electric security newsletter.
- Visit the Cybersecurity Support Portal web page to:
  - Find Security Notifications.
  - Report vulnerabilities and incidents.
- Visit the Schneider Electric Cybersecurity and Data Protection Posture web page to:
  - Access the cybersecurity posture.
  - Learn more about cybersecurity in the cybersecurity academy.
  - Explore the cybersecurity services from Schneider Electric.

Environmental Data

For product compliance and environmental information, refer to the Schneider Electric Environmental Data Program.

Related Documents

Title of documentation	Reference number
Cybersecurity Best Practices	Refer to General Cybersecurity Information, page 12
EcoStruxure Machine Expert - HVAC - Operating Guide	EIO0000003412 (ENG)
Modicon M171 Performance Logic Controllers Hardware User Manual	EIO0000002030 (ENG)
Modicon M171 Electronic Expansion Valve Drivers User Manual	EIO0000002034 (ENG)
TM171 Optimized 22 IO - Instruction Sheet	EAV96008
TM171 Optimized 14 IO - Instruction Sheet	EAV96012
TM171 Optimized Display - Instruction Sheet	EAV96016
TM171 Optimized Wall Thermostat - Instruction Sheet	EAV96018
Modicon TM172SI Secure Interface User Guide	EIO0000004649 (ENG)
Modicon M172 Logic Controller Hardware Guide	EIO0000002015 (ENG)
TM172EVEV Modicon M172 Electronic Expansion Valve Driver - Instruction Sheet	GDE42243
TM172 Optimized & Performance Expansion 12/28 IO - Instruction Sheet	QGH26895

Title of documentation	Reference number
TM172DCLW••• Display Color Touchscreen - Instruction Sheet	QGH26896
Modicon M172 Electronic Expansion Valve Driver Preconfigured Valves Parameters Guide	EIO0000004387

To find documents online, visit the Schneider Electric download center (www.se.com/ww/en/download/).

Information on Non-Inclusive or Insensitive Terminology

As a responsible, inclusive company, Schneider Electric is constantly updating its communications and products that contain non-inclusive or insensitive terminology. However, despite these efforts, our content may still contain terms that are deemed inappropriate by some customers.

Terminology Derived from Standards

The technical terms, terminology, symbols and the corresponding descriptions in the information contained herein, or that appear in or on the products themselves, are generally derived from the terms or definitions of international standards.

In the area of functional safety systems, drives and general automation, this may include, but is not limited to, terms such as *safety, safety function, safe state, fault, fault reset, malfunction, failure, error, error message, dangerous,* etc.

Among others, these standards include:

Standard	Description
IEC 61131–2:2007	Programmable controllers, part 2: Equipment requirements and tests.
ISO 13849–1:2023	Safety of machinery: Safety related parts of control systems. General principles for design.
EN 61496–1:2013	Safety of machinery: Electro-sensitive protective equipment. Part 1: General requirements and tests.
ISO 12100:2010	Safety of machinery — General principles for design — Risk assessment and risk reduction.
EN 60204–1:2006	Safety of machinery — Electrical equipment of machines — Part 1: General requirements.
ISO 14119:2013	Safety of machinery — Interlocking devices associated with guards — Principles for design and selection.
ISO 13850:2015	Safety of machinery — Emergency stop — Principles for design.
IEC 62061:2021	Safety of machinery — Functional safety of safety-related electrical, electronic, and electronic programmable control systems.
IEC 61508–1:2010	Functional safety of electrical/electronic/ programmable electronic safety-related systems: General requirements.
IEC 61508–2:2010	Functional safety of electrical/electronic/ programmable electronic safety-related systems: Requirements for electrical/electronic/ programmable electronic safety-related systems.

IEC 61508–3:2010	Functional safety of electrical/electronic/ programmable electronic safety-related systems: Software requirements.
IEC 61784–3:2021	Industrial communication networks — Profiles — Part 3: Functional safety fieldbuses — General rules and profile definitions.
2006/42/EC	Machine Directive
2014/30/EU	Electromagnetic Compatibility Directive
2014/35/EU	Low Voltage Directive

In addition, terms used in the present document may tangentially be used as they are derived from other standards such as:

Standard	Description
IEC 60034 series	Rotating electrical machines.
IEC 61800 series	Adjustable speed electrical power drive systems.
IEC 61158 series	Digital data communications for measurement and control — Fieldbus for use in industrial control systems.

Finally, the term *zone of operation* may be used in conjunction with the description of specific hazards, and is defined as it is for a *hazard zone* or *danger zone* in the *Machinery Directive (2006/42/EC)* and *ISO 12100:2010*.

NOTE: The aforementioned standards may or may not apply to the specific products cited in the present documentation. For more information concerning the individual standards applicable to the products described herein, see the characteristics tables for those product references.

Overview

What's in This Part

M173O Range Overview 16

M173O Range Overview

What's in This Chapter

M173O Range Overview....16
Controller Range Overview....17
Expansion Modules Range Overview....19
Remote Display Range Overview....20
Accessories....20
Maximum Hardware Configuration....23

M173O Range Overview

General Description

The M173O range is the compact option in the Schneider Electric platform of programmable controllers, remote displays and accessories, and is dedicated for use in various HVAC&R and other applications.

Modicon M173 Optimized Logic Controller is suitable for customized applications designed to control simple and compacts machines:

- Heat pumps (up to two circuits)
- Process chillers
- Pumping
- Boilers/Heaters
- Any small and compact machines

The M173O offer is made of:

- Controllers, page 17
- Expansion modules, page 19
- Remote display, page 20
- Accessories, page 20

Programming Software

In association with the controllers hardware, the EcoStruxure Machine Expert - HVAC development tool is available to program and customize applications.

You can download EcoStruxure Machine Expert - HVAC from https://www.se.com/.

The use of several programming languages in accordance with IEC 61131-3 regulations (programming standard for industrial control), makes it possible to develop new algorithms or entire programs easily, which can then be uploaded to the M173O controllers via a PC and a Programming cable, helping to provide confidentiality with appropriate security.

For more information, refer to Connection Types.

Controller Range Overview

Type Code

Controller type code:

Type code description						
TM173ODM22RH	TM173O	D	M	22	R	H
Product family	M173O					
Physical feature		B = Blind D = Built-in Display F = Flush mounting				
Embedded Communication			M = RS-485 based communication protocols			
Number of I/O				22		
Digital output type					R = Relays S = n. 2 Solid State Relays (SSR)	
Power supply						H =110/240 Vac Power Supply None =24 Vac Power Supply

Controllers References

Reference	Display	Inputs/Outputs				Communication				
		DI	DO	AI	AO	USB C	RS-485	CAN Expansion bus	Communication module connector	Remote display connector
15 Inputs/Outputs, page 50										
TM173ODM15R	✓	4	5	4	2	✓	✓	-	✓	-
22 Inputs/Outputs, page 53										
TM173OBM22R TM173OBM22RH	-	6	5	7	4	✓	✓	✓	✓	✓
TM173ODEM22R TM173ODM22R TM173ODM22RH	✓	6	5	7	4	✓	✓	✓	✓	✓
TM173ODM22S TM173ODM22SH	✓	6	3 + 2 SSR	7	4	✓	✓	✓	✓	✓
TM173OFM22R	✓	6	5	7	4	✓	✓	-	✓	-
TM173OFM22S	✓	6	3 + 2 SSR	7	4	✓	✓	-	✓	-

TM173OB•••• / TM173OD•••• / TM173ODEM22R / TM173O•••••H Delivery Content

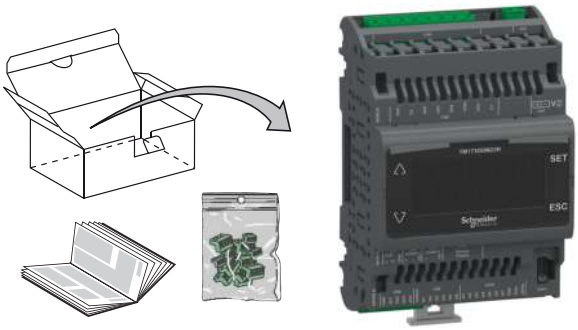

TM173OF•••• Delivery Content

NOTE: Cordset connector cable is not provided with the logic controllers and must be ordered separately, page 20.

Expansion Modules Range Overview

Type Code

Expansion module type code:

Type code description			
TM172E28R	TM172E	28	R
Product family	TM172E		
Number of I/O		12 28	
Digital output type			R = Relays

Expansion Modules References

Reference	Inputs/Outputs				1 CAN Exp. bus	1 TTL(1)	Compatible controllers
	DI	DO	AI	AO			
12 Inputs/Outputs, page 69							
TM172E12R	2	6	4	-	✓	✓	TM173OB•••• TM173OD•••• TM173ODEM22R
28 Inputs/Outputs, page 71							
TM172E28R	6	10	10	2	✓	✓	TM173OB•••• TM173OD•••• TM173ODEM22R
(1) For service only.							

The expansion modules run on 24 Vac/dc power supply.

NOTE: The expansion modules are not compatible with TM173OF•••• controllers.

TM172E••R Delivery Content

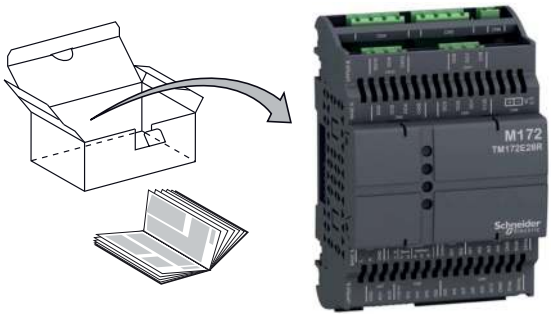

NOTE: Terminal blocks are not provided with the expansion modules and must be ordered separately

Remote Display Range Overview

Type Code

Remote display with touch interface type code:

Type code description			
TM173DLED	TM173	D	LED
Product family	M173O		
Physical feature		D = Display	
Characteristics			LED = Led

Remote Display Reference

Reference	Compatible controllers
TM173DLED	TM173OB•••• TM173OD•••• TM173ODEM22R

The remote display is powered by the connected controller.

TM173DLED

NOTE: 3V cable, length 2 m, is provided with the remote display.

Accessories

Overview

This section describes the accessories and sensors.

Mounting and Wiring Accessories References

Description	Use	Reference
12 clips-on lock	To install the TM173O•••••• controllers and the TM172•••••• expansion modules on a panel surface, page 40	TM172AP12PM
M172 Exp. 12 I/Os Screw Terminal Blocks	For TM172E12R, page 69	TM172ASCTB12E

Description	Use	Reference
	For TM172E28R, page 71	
M172 Exp. 28 I/Os Screw Terminal Blocks	For TM172E12R, page 69 For TM172E28R, page 71	TM172ASCTB28E
USB (type C) cable	To connect a PC to a TM173O•••••• controller, page 95	-
Cordset connector cable	For TM173OF••••, page 59	Cable length 1 m (3.3 ft): TM173ACB1M Cable length 2 m (6.6 ft): TM173ACB2M

TM173ACB•M Cordset Description

The following table provides description of the 22-pin connectors with free wires:

Pin Number		Wire Color	Dedicated to
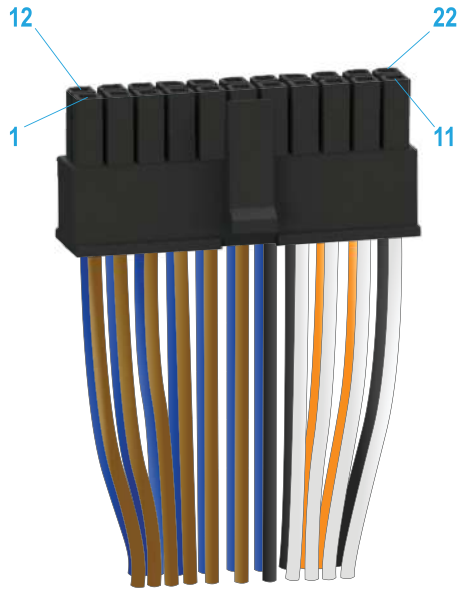	1…6	Brown	Digital inputs
	7, 19, 22	Black	GND
	8...11	White	Analog outputs
	12…18	Blue	Analog inputs
	20	Orange / White	Auxiliary supply 24V
	21	Orange	Auxiliary supply 5V

Sensors References

Description		Cable length	Reference
NTC IP68 5x20 mm (0.79 in.) -50+110 °C (-122…+230 °F) Gray	8 pieces	1.5 m (4.9 ft)	TM1STNTCRN52015
	100 pieces		TM1STNTCRN5201P
	5 pieces	3 m (9.8 ft)	TM1STNTCRN52030
	50 pieces		TM1STNTCRN5203P
	4 pieces	5 m (16.4 ft)	TM1STNTCRN52050
	25 pieces		TM1STNTCRN5205P
NTC IP67 6x15 mm (0.591 in.) -50…+110 °C (-122…+230 °F) Gray		1.5 m (4.9 ft)	TM1STNTCRN61515
		3 m (9.8 ft)	TM1STNTCRN61530
		5 m (16.4 ft)	TM1STNTCRN61550
NTC FAST IP67 4x40 mm (1.57 in.) -50+110 °C (-122…+230 °F) Gray		1.5 m (4.9 ft)	TM1STNTCSF44015

Description		Cable length	Reference
		3 m (9.8 ft)	TM1STNTCSF44030
NTC IP68 6x20 mm (0.79 in.) -50+110 °C (-122…+230 °F) Gray		1.5 m (4.9 ft)	TM1STNTCSN62015
		3 m (9.8 ft)	TM1STNTCSN62030
		5 m (16.4 ft)	TM1STNTCSN62050
NTC IP68 6x20 mm (0.79 in.) TPE with strap Gray		1.5 m (4.9 ft)	TM1STNTCTN62015
		3 m (9.8 ft)	TM1STNTCTN62030
NTC for inside air -40...+60 °C (-40...+140 °F)	Wall mounting	-	TM1STNTCWN75750
Pt1000 IP68 6x20 mm (0.79 in.) -50…+110 °C (-122…+230 °F) Green		1.5 m (4.9 ft)	TM1STPTTSN52015
		3 m (9.8 ft)	TM1STPTTSN52030
		5 m (16.4 ft)	TM1STPTTSN52050
Pt1000 IP68 5x20 mm (0.79 in.) -50…+110 °C (-122…+230 °F) Green		1.5 m (4.9 ft)	TM1STPTTSN62015
		3 m (9.8 ft)	TM1STPTTSN62030
Humidity Probe Outdoor Wall mounting 4...20 mA (%RH)		-	TM1SHC4
Humidity and Temperature Probe Outdoor Wall mounting 4...20 mA (%RH) + NTC (Temp)		-	TM1SHTCN4
Humidity and Temperature Probe Outdoor Wall mounting 4...20 mA (%RH) + 4...20 mA (Temp)		-	TM1SHTCC4
Humidity and Temperature Probe Outdoor Wall mounting, Dewpoint Calculation Modbus SL RS-485			TM1SHTM4
NTC Temperature Probe Outdoor Wall mounting		-	TM1STNTCW69755

Maximum Hardware Configuration

Overview

The devices can be connected through the CAN Expansion bus.

It is possible to connect:

- 1 controller (TM173O••••••)
- 3 expansion modules (TM172E28R or electronic expansion valves driver TM172EVEV••) compatible with the controller

Maximum Architecture Example

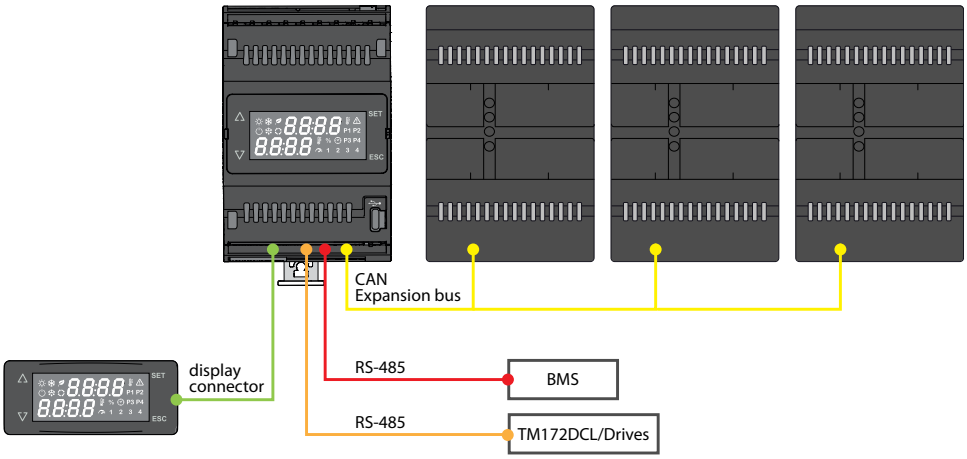

To connect more devices, use the suitable cables and connector devices.

Global Features

What's in This Part

Before Starting 25
Wiring Best Practices 29
Installation 35

Before Starting

Before Starting

Read and understand this chapter before beginning the installation of your system.

Pay particular attention in conforming to any safety information, different electrical requirements, and normative standards that would apply to your machine or process in the use of this equipment.

The use and application of the information contained herein require expertise in the design and programming of automated control systems. Only you, the user, machine builder or integrator, can be aware of all the conditions and factors present during installation and setup, operation, and maintenance of the machine or process, and can therefore determine the automation and associated equipment and the related safeties and interlocks which can be effectively and properly used. When selecting automation and control equipment, and any other related equipment or software, for a particular application, you must also consider any applicable local, regional or national standards and/or regulations.

⚠ WARNING

REGULATORY INCOMPATIBILITY

Ensure that all equipment applied and systems designed comply with all applicable local, regional, and national regulations and standards.

Failure to follow these instructions can result in death, serious injury, or equipment damage.

Disconnecting Power

All options and modules should be assembled and installed before installing the control system on a mounting rail, onto a mounting plate or in a panel. Remove the control system from its mounting rail, mounting plate or panel before disassembling the equipment.

⚠⚠ DANGER

HAZARD OF ELECTRIC SHOCK, EXPLOSION OR ARC FLASH

- Disconnect all power from all equipment including connected devices prior to removing any covers or doors, or installing or removing any accessories, hardware, cables, or wires except under the specific conditions specified in the appropriate hardware guide for this equipment.
- Always use a properly rated voltage sensing device to confirm the power is off where and when indicated.
- Replace and secure all covers, accessories, hardware, cables, and wires and confirm that a proper ground connection exists before applying power to the unit.
- Use only the specified voltage when operating this equipment and any associated products.

Failure to follow these instructions will result in death or serious injury.

Programming Considerations

The products described in this manual have been designed and tested using Schneider Electric programming, configuration, and maintenance software products.

⚠ WARNING

UNINTENDED EQUIPMENT OPERATION

- Only use software approved by Schneider Electric for use with this equipment.
- Update your application program every time you change the physical hardware configuration.

Failure to follow these instructions can result in death, serious injury, or equipment damage.

Operating Environment

⚠ WARNING

UNINTENDED EQUIPMENT OPERATION

Install and operate this equipment according to the conditions described in the Environmental Characteristics.

Failure to follow these instructions can result in death, serious injury, or equipment damage.

Flammable Gas Refrigerants

Flammable Gas Refrigerants

The use of flammable refrigerant gases depends on many factors, including local, regional and/or national regulations. The devices and corresponding accessories described in the documentation accompanying the product use components and, more specifically, electromechanical relays tested in accordance with IEC standard 60079-15 and classed as nC components (non-sparking ”n” electrical apparatus). This condition complies to Clause 22.116 of EN/IEC 60335-2-40.

Conformance to Clause 22.116 of EN/IEC 60335-2-40 is considered sufficient, and thereby suitable, for HVAC applications which are in the scope of EN/IEC 60335-2-40 and applying flammable gas refrigerants, such as R290. However, other limitations, equipment, locations and/or type of machine may also be implicated, restricted and/or required in so doing.

The use and application of the information contained herein require expertise in the design and parameterizing/programming of HVAC control systems. Only you - the original equipment manufacturer, installer or user - can be aware of all the conditions and factors present, and the regulations applicable, during the design, installation and setup, operation, and maintenance of the machine or related processes. Therefore, only you can determine the suitability of automation and associated equipment, and the related safeties and interlocks, which can be effectively and properly used in the locations for which the equipment is to be put into service. When selecting the automation and control equipment - and any other related equipment or software - for a particular application, the applicable standards as set out by national regulatory bodies or the relevant certifying authorities must also be taken into consideration.

You must verify, while incorporating this controller and related equipment, the final compliance of the machine to regulations and standards when using flammable gas refrigerants. Although all statements and information contained herein are believed to be accurate and reliable, they are presented without warranty of any kind. Information provided herein does not relieve you from the responsibility of carrying out your own tests and validations of conformance to any applicable regulations.

⚠ WARNING

REGULATORY INCOMPATIBILITY

Be sure that all equipment applied and systems designed comply with applicable clauses of EN/IEC 60335-2-40 under the specific conditions specified in the appropriate hardware guide for this equipment.

Failure to follow these instructions can result in death, serious injury, or equipment damage.

Installation Considerations

⚠ WARNING

UNINTENDED EQUIPMENT OPERATION

- Use appropriate safety interlocks where personnel and/or equipment hazards exist.
- Install and operate this equipment in an enclosure appropriately rated for its intended environment and secured by a keyed or tooled locking mechanism.
- Use the sensor and actuator power supplies only for supplying power to the sensors or actuators connected to the module.
- Power line and output circuits must be wired and fused in compliance with local and national regulatory requirements for the rated current and voltage of the particular equipment.
- Do not use this equipment in safety-critical machine functions unless the equipment is otherwise designated as functional safety equipment and conforming to applicable regulations and standards.
- Do not disassemble, repair, or modify this equipment.
- Do not connect any wiring to unused connections, or to connections designated as No Connection (N.C.).

Failure to follow these instructions can result in death, serious injury, or equipment damage.

NOTE: JDYX2 or JDYX8 fuse types are UL-recognized and CSA approved.

The M173O controllers are intended for Top Hat Section Rail (DIN rail) mounting, panel mounting, or wall mounting.

Care must be taken to avoid damage from electrostatic sources when handling this equipment. In particular exposed connectors and, in some cases, exposed printed circuit boards are exceptionally vulnerable to electrostatic discharge.

⚠ WARNING

UNINTENDED EQUIPMENT OPERATION DUE TO ELECTROSTATIC DISCHARGE DAMAGE

- Keep equipment in the protective conductive packaging until you are ready to install the equipment.
- Only install equipment in approved enclosures and / or locations that prevent casual access and provide electrostatic discharge protection.
- Use a conductive wrist strap or equivalent field force protective device attached to an earth ground when handling sensitive equipment.
- Always discharge yourself by touching a grounded surface or approved antistatic mat before handling the equipment.

Failure to follow these instructions can result in death, serious injury, or equipment damage.

For more information about enclosures, refer to the definition found in IEC 1000-4-2.

Wiring Best Practices

Wiring Best Practices

The following information describes the wiring guidelines and associated best practices to be respected when using a Modicon M173 Optimized Logic Controller.

⚠⚠DANGER

HAZARD OF ELECTRIC SHOCK, EXPLOSION OR ARC FLASH

- Disconnect all power from all equipment including connected devices prior to removing any covers or doors, or installing or removing any accessories, hardware, cables, or wires except under the specific conditions specified in the appropriate hardware guide for this equipment.
- Always use a properly rated voltage sensing device to confirm the power is off where and when indicated.
- Replace and secure all covers, accessories, hardware, cables, and wires and confirm that a proper ground connection exists before applying power to the unit.
- Use only the specified voltage when operating this equipment and any associated products.

Failure to follow these instructions will result in death or serious injury.

⚠WARNING

LOSS OF CONTROL

- The designer of any control scheme must consider the potential failure modes of control paths and, for certain critical control functions, provide a means to achieve a safe state during and after a path failure. Examples of critical control functions are emergency stop and overtravel stop, power outage and restart.
- Separate or redundant control paths must be provided for critical control functions.
- System control paths may include communication links. Consideration must be given to the implications of unanticipated transmission delays or failures of the link.
- Observe all accident prevention regulations and local safety guidelines.[1]
- Each implementation of this equipment must be individually and thoroughly tested for proper operation before being placed into service.

Failure to follow these instructions can result in death, serious injury, or equipment damage.

[1] For additional information, refer to NEMA ICS 1.1 (latest edition), "Safety Guidelines for the Application, Installation, and Maintenance of Solid State Control" and to NEMA ICS 7.1 (latest edition), "Safety Standards for Construction and Guide for Selection, Installation and Operation of Adjustable-Speed Drive Systems" or their equivalent governing your particular location.

Wiring Guidelines

The following rules must be applied when wiring M173O controllers:

- I/O and communication wiring must be kept separate from the power wiring. Route these two types of wiring in separate cable ducting.
- Verify that the operating conditions and environment are within the specification values.
- Use proper wire sizes to meet voltage and current requirements.
- Use copper conductors (required).
- Use twisted pair, shielded cables for analog, and/or fast I/O.
- Use twisted pair, shielded cables for networks, and fieldbus.

Use shielded, properly grounded cables for all analog and high-speed inputs or outputs and communication connections. If you do not use shielded cable for these connections, electromagnetic interference can cause signal degradation. Degraded signals can cause the controller or attached modules and equipment to perform in an unintended manner.

⚠ WARNING

UNINTENDED EQUIPMENT OPERATION

- Use shielded cables for all fast I/O, analog I/O and communication signals.
- Ground cable shields for all analog I/O, fast I/O and communication signals at a single point[1].
- Route communication and I/O cables separately from power cables.

Failure to follow these instructions can result in death, serious injury, or equipment damage.

[1] Multipoint grounding is permissible if connections are made to an equipotential ground plane dimensioned to help avoid cable shield damage in the event of power system short-circuit currents.

NOTE: Surface temperatures may exceed 60 °C (140 °F). Route primary wiring (wires connected to power mains) separately and apart from secondary wiring (extra low voltage wiring coming from intervening power sources). If that is not possible, double insulation is required such as conduit or cable gains.

Rules for Screw Terminal Block

The following table presents the cable types and wire sizes for a 5.08 mm (0.20 in.) or 5.00 mm (0.197 in.) pitch screw terminal block:

mm / *in.* 7 / *0.28*								
mm²	0.2…2.5	0.2…2.5	0.25…2.5	0.25…2.5	2 x 0.2…1	2 x 0.2…1.5	2 x 0.25…1	2 x 0.5...1.5
AWG	*24…14*	*24…14*	*22...14*	*22...14*	*2 x 24…18*	*2 x 24…16*	*2 x 22…18*	*2 x 20...16*

Ø 3,5 mm (*0.14 in.*)	C
N•m	0.5...0.6
lb-in	*4.42...5.31*

The following table presents the cable types and wire sizes for a 3.50 mm (0.14 in.) or 3.81 mm (0.15 in.) pitch screw terminal block:

mm / in. 9 / 0.35								
mm²	0.14...1.5	0.14…1.5	0.25…1.5	0.25…0.5	2 x 0.08…0.5	2 x 0.08…0.75	2 x 0.25…0.34	2 x 0.5
AWG	*26…16*	*26…16*	*22...16*	*22...20*	*2 x 28…20*	*2 x 28…20*	*2 x 24…22*	*2 x 20*

Ø 2,5 mm (*0.1 in.*)	C
N•m	0.22...0.25
lb-in	*1.95...2.21*

The following table presents the cable types and wire sizes for a 2.50 mm (0.098 in.) pitch screw terminal block:

mm / in. 7 / 0.27				
mm²	0.2…0.5	0.2…0.5	0.25…0.35	0.25…0.35
AWG	*32…24*	*32…24*	*30...27*	*30...27*

NOTE: It is not required a specific screwdriver.

The use of copper conductors is required.

⚠⚠DANGER

LOOSE WIRING CAUSES ELECTRIC SHOCK

- Tighten connections in conformance with the torque specifications.
- Do not insert more than one wire per connector of the terminal block unless using the cable ends (ferrules) specified above.

Failure to follow these instructions will result in death or serious injury.

⚠WARNING

FIRE HAZARD

- Use only the recommended wire sizes for the current capacity of the I/O channels and power supplies.
- For relay output wiring up to 2 A, use conductors of at least 0.5 mm² (AWG 20) with a temperature rating of at least 80 °C (176 °F).
- For relay output wiring of 3 A, use conductors of at least 1.5 mm² (AWG 16) with a temperature rating of at least 80 °C (176 °F).
- For common conductors of relay output wiring of 9 A, or relay output wiring greater than 3 A, use conductors of at least 2.0 mm² (AWG 12) with a temperature rating of at least 80 °C (176 °F).

Failure to follow these instructions can result in death, serious injury, or equipment damage.

Protecting Outputs from Inductive Load Damage

Depending on the load, a protection circuit may be needed for the relay outputs. Inductive loads using DC voltages may create voltage reflections resulting in overshoot that will damage or shorten the life of output devices.

⚠CAUTION

OUTPUT CIRCUIT DAMAGE DUE TO INDUCTIVE LOADS

Use an appropriate external protective circuit or device to reduce the risk of inductive direct current load damage.

Failure to follow these instructions can result in injury or equipment damage.

Choose a protection circuit from the following diagrams according to the power supply used. Connect the protection circuit to the outside of the controller or relay output module.

If your controller or module contains relay outputs, these types of outputs can support up to 240 Vac. Inductive damage to these types of outputs can result in welded contacts and loss of control. Each inductive load must include a protection device such as a peak limiter, RC circuit or flyback diode. Capacitive loads are not supported by these relays.

⚠WARNING

RELAY OUTPUTS WELDED CLOSED

- Always protect relay outputs from inductive alternating current load damage using an appropriate external protective circuit or device.
- Do not connect relay outputs to capacitive loads.

Failure to follow these instructions can result in death, serious injury, or equipment damage.

Protective circuit A: this protection circuit can be used for both AC and DC load power circuits.

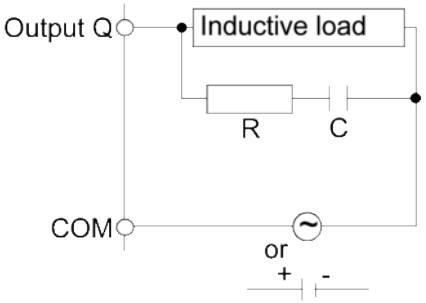

C Value from 0.1 to 1 µF

R Resistor of approximately the same resistance value as the load

Protective circuit B: this protection circuit can be used for DC load power circuits.

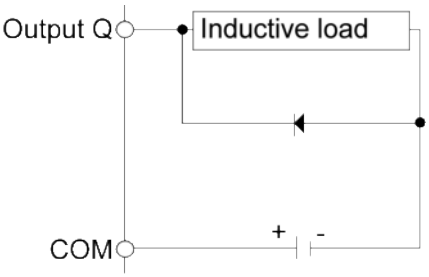

Use a diode with the following ratings:

- Reverse withstand voltage: power voltage of the load circuit x 10.
- Forward current: more than the load current.

Protective circuit C: this protection circuit can be used for both AC and DC load power circuits.

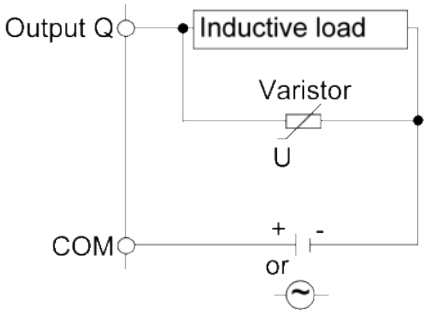

In applications where the inductive load is switched on and off frequently and/or rapidly, verify that the continuous energy rating (J) of the varistor exceeds the peak load energy by 20 % or more.

NOTE: Place protection devices as close to the load as possible.

Special Handling Considerations

Care must be taken to avoid damage from electrostatic sources when handling this equipment. In particular exposed connectors and, in some cases, exposed printed circuit boards are exceptionally vulnerable to electrostatic discharge.

⚠ WARNING

UNINTENDED EQUIPMENT OPERATION DUE TO ELECTROSTATIC DISCHARGE DAMAGE

- Keep equipment in the protective conductive packaging until you are ready to install the equipment.
- Only install equipment in approved enclosures and / or locations that prevent casual access and provide electrostatic discharge protection.
- Use a conductive wrist strap or equivalent field force protective device attached to an earth ground when handling sensitive equipment.
- Always discharge yourself by touching a grounded surface or approved antistatic mat before handling the equipment.

Failure to follow these instructions can result in death, serious injury, or equipment damage.

Analog Inputs-Probes

Temperature probes have no connection polarity and can be extended using a normal bipolar cable.

The extension of the probes wiring influences the electromagnetic compatibility (EMC) of the instrument.

Verify the polarity for probes which have a specific connection polarity.

NOTICE

INOPERABLE EQUIPMENT

Verify all wiring connections before applying power.

Failure to follow these instructions can result in equipment damage.

Do not power any connected devices that are externally powered without also applying power to the M173O.

NOTICE
INOPERABLE EQUIPMENT Ensure that the controller has power applied when applying power to other connected and externally powered devices. **Failure to follow these instructions can result in equipment damage.**

Signal leads (probes, digital inputs, communication, and the electronic supply) must be routed separately from power cables.

Installation

What's in This Chapter

TM173OB••••/TM173OD•••• / TM173ODEM22R / TM173O•••••H Controllers Mounting Positions 35
TM172E••R Expansion Modules Mounting Positions 36
Controllers and Expansion Modules Clearances 36
Top Hat Section Rail (DIN Rail) 37
Controllers and Expansion Modules Installation 40
TM172EVEVBAT Battery Backup Installation 43
TM173DLED Remote Display Installation 44
TM173OF•••• Controllers Installation 45

TM173OB••••/TM173OD•••• / TM173ODEM22R / TM173O•••••H Controllers Mounting Positions

Correct Mounting Position

TM173OB••••/TM173OD•••• / TM173ODEM22R / TM173O•••••H controllers must be mounted horizontally on a vertical plane as shown in the figure below:

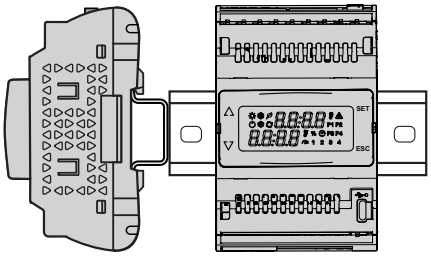

Incorrect Mounting Position

TM173OB••••/TM173OD•••• / TM173ODEM22R / TM173O•••••H controllers cannot be mounted neither vertically, nor horizontally backward:

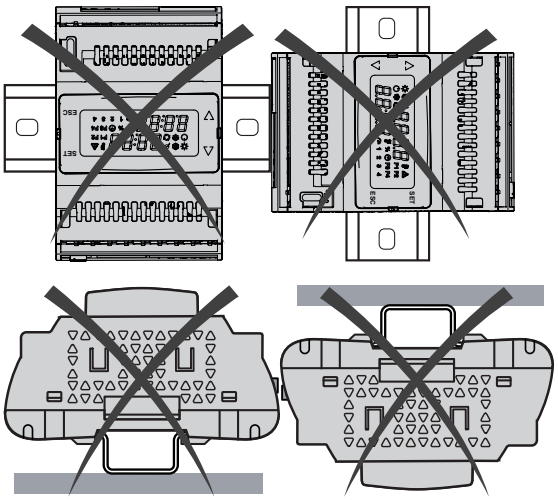

TM172E••R Expansion Modules Mounting Positions

Correct Mounting Position

TM172E••R expansion modules must be mounted horizontally on a vertical plane or horizontally upward as shown in the figure below:

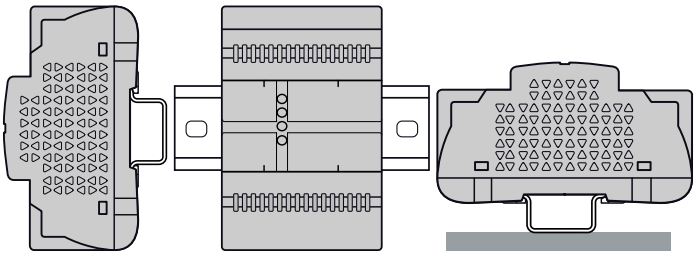

Incorrect Mounting Position

TM172E••R expansion modules cannot be mounted neither vertically, nor horizontally backward:

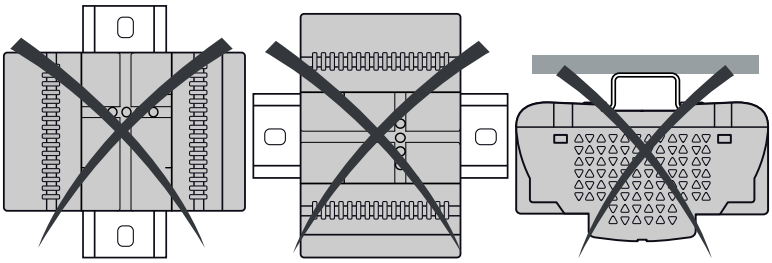

Controllers and Expansion Modules Clearances

Minimum Clearances

⚠WARNING

UNINTENDED EQUIPMENT OPERATION

- Place devices dissipating the most heat at the top of the cabinet and ensure adequate ventilation.
- Avoid placing this equipment next to or above devices that might cause overheating.
- Install the equipment in a location providing the minimum clearances from all adjacent structures and equipment as directed in this document.
- Install all equipment in accordance with the specifications in the related documentation.

Failure to follow these instructions can result in death, serious injury, or equipment damage.

TM173O•••••• controllers and TM172•••••• expansion modules have been designed as IP20 products and must be installed in an enclosure appropriately rated for its intended environment and secured by a keyed or tooled locking mechanism.

There are 3 types of clearances between:

- The M173O controller and the sides of the cabinet (including the panel door).
- The M173O controller terminal blocks and the wiring ducts. This distance reduces electromagnetic interference between the controller and the wiring ducts.
- The M173O controller and other heat generating devices installed in the same cabinet.

The following figure shows the minimum clearances that apply to the TM173OB••••/TM173OD•••• / TM173ODEM22R / TM173O•••••H references:

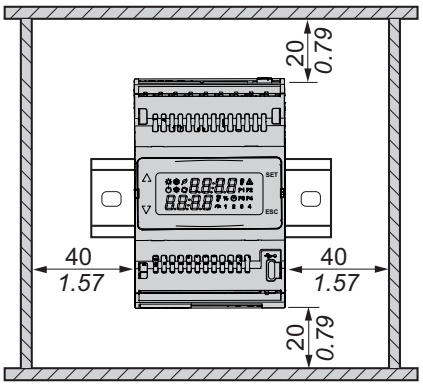

The following figure shows the minimum clearances that apply to the TM173OF•••• references:

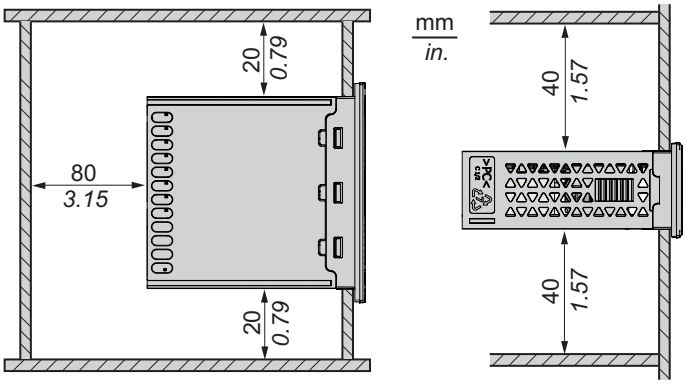

Top Hat Section Rail (DIN Rail)

Dimensions of Top Hat Section Rail (DIN Rail)

You can mount the controller and expansion module on a 35 mm (1.38 in.) top hat section rail (DIN rail). It can be attached to a smooth mounting surface or suspended from a EIA rack or mounted in a NEMA cabinet.

Symmetric Top Hat Section Rails (DIN Rail)

The following illustration and table show the references of the top hat section rails (DIN rail) for the wall-mounting range:

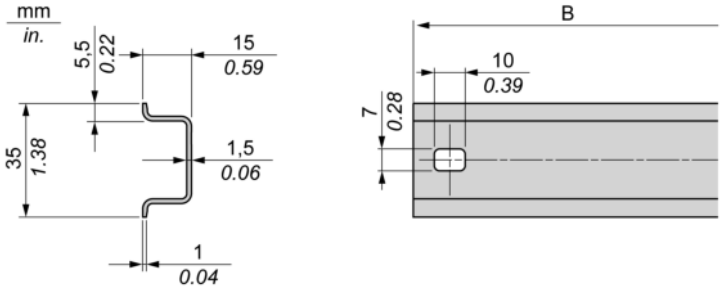

Reference	Type	Rail length (B)
NSYSDR50A	A	450 mm (17.71 in.)
NSYSDR60A	A	550 mm (21.65 in.)
NSYSDR80A	A	750 mm (29.52 in.)
NSYSDR100A	A	950 mm (37.40 in.)

The following illustration and table show the references of the symmetric top hat section rails (DIN rail) for the metal enclosure range:

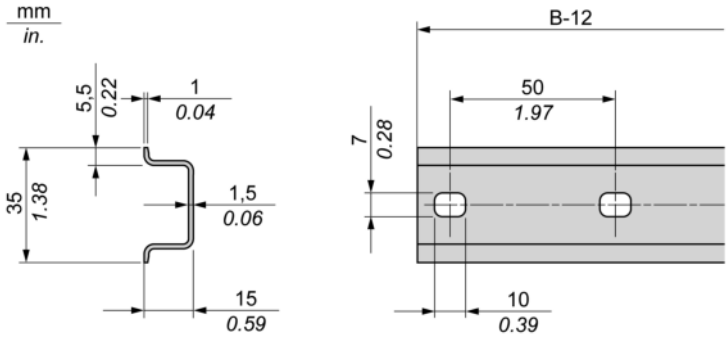

Reference	Type	Rail length (B-12 mm)
NSYSDR60	A	588 mm (23.15 in.)
NSYSDR80	A	788 mm (31.02 in.)
NSYSDR100	A	988 mm (38.89 in.)
NSYSDR120	A	1188 mm (46.77 in.)

The following illustration and table shows the references of the symmetric top hat section rails (DIN rail) of 2000 mm (78.74 in.):

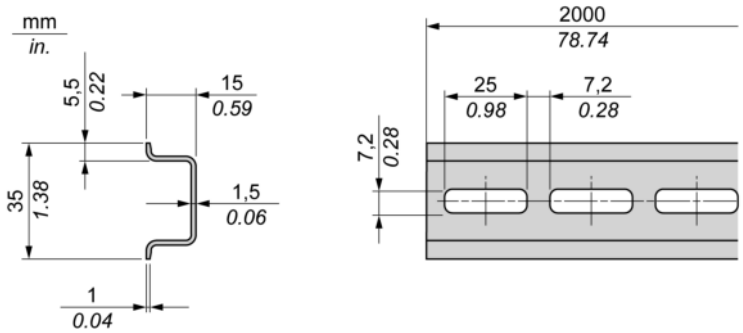

Reference	Type	Rail length
NSYSDR200[1]	A	2000 mm (78.74 in.)
NSYSDR200D[2]	A	
1 Unperforated galvanized steel **2** Perforated galvanized steel		

The following illustration and table shows the references of the symmetric top hat section rails (DIN rail) of 2000 mm (78.74 in.):

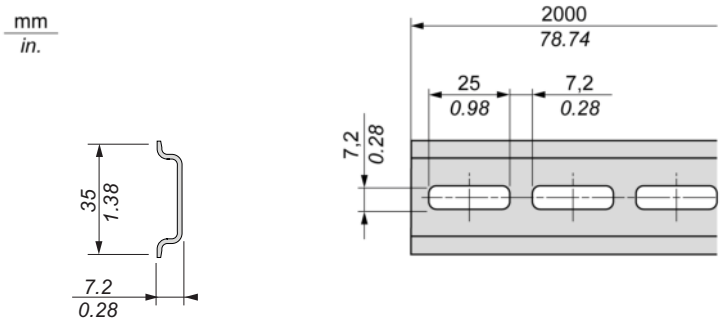

Reference	Type	Rail length
NSYSDR200BD	A	2000 mm (78.74 in.)

Double-Profile Top Hat Section Rails (DIN Rail)

The following illustration and table show the references of the double-profile top hat section rails (DIN rails) for the wall-mounting range:

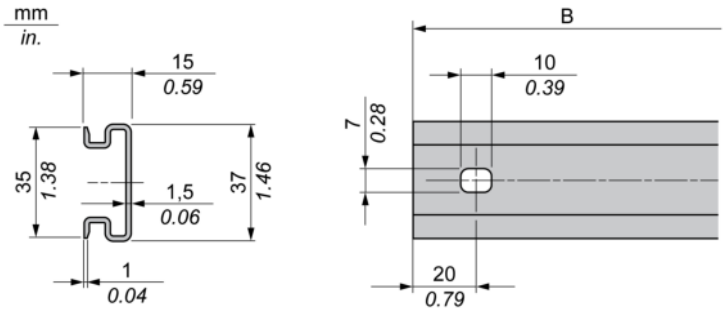

Reference	Type	Rail length (B)
NSYDPR25	W	250 mm (9.84 in.)
NSYDPR35	W	350 mm (13.77 in.)
NSYDPR45	W	450 mm (17.71 in.)
NSYDPR55	W	550 mm (21.65 in.)
NSYDPR65	W	650 mm (25.60 in.)
NSYDPR75	W	750 mm (29.52 in.)

The following illustration and table show the references of the double-profile top hat section rails (DIN rail) for the floor-standing range:

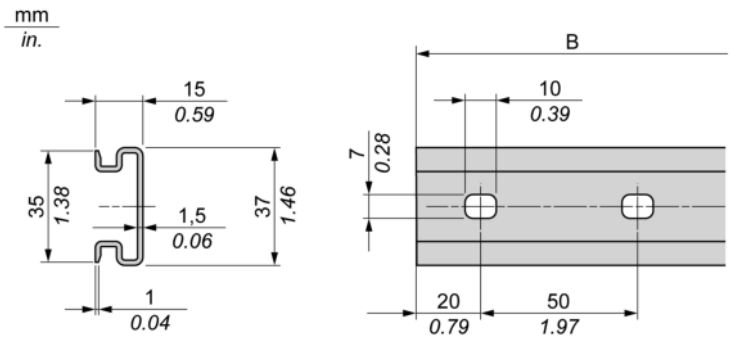

Reference	Type	Rail length (B)
NSYDPR60	F	588 mm (23.15 in.)
NSYDPR80	F	788 mm (31.02 in.)
NSYDPR100	F	988 mm (38.89 in.)
NSYDPR120	F	1188 mm (46.77 in.)

The following illustration and table shows the references of the double-profile top hat section rails (DIN rail) of 2000 mm (78.74 in.):

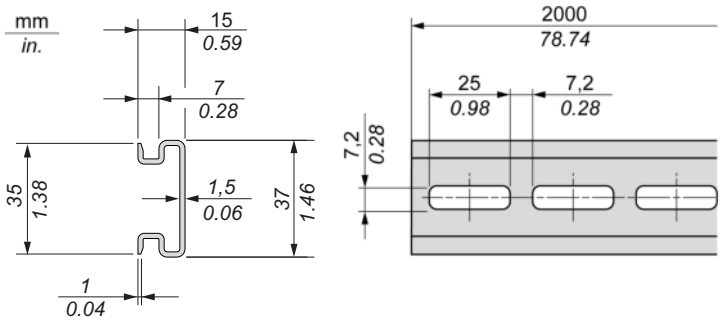

Reference	Type	Rail length
NSYDPR200T	A	2000 mm (78.74 in.)

Controllers and Expansion Modules Installation

Installing on a Top Hat Section Rail (DIN Rail)

The following procedure describes how to install a TM173OB••••/TM173OD•••• / TM173ODEM22R / TM173O•••••H controller or an expansion module on a top hat section rail (DIN rail):

Step	Action
1	Move the spring docking device to its standby position (use a screwdriver to press against the relative compartment).
2	Position the top groove of the controller or the expansion modules on the top edge of the Top Hat Section Rail (DIN rail).
3	Press the assembly against the Top Hat Section Rail (DIN rail).
4	Press the spring docking device to put it into the locked position.

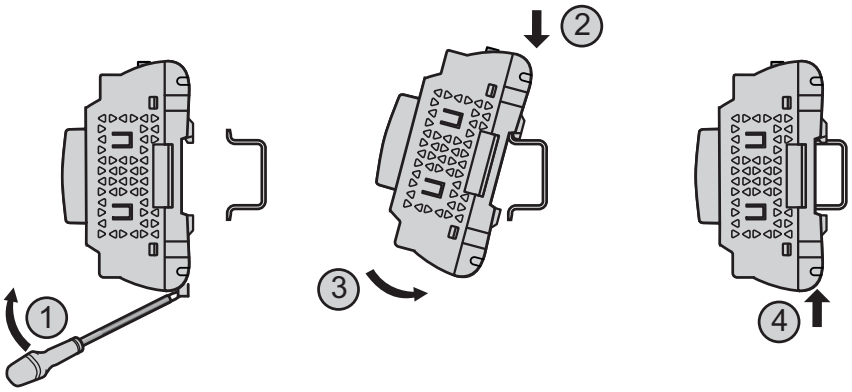

Removing from a Top Hat Section Rail (DIN Rail)

The following procedure describes how to remove a controller or an expansion module from a top hat section rail (DIN rail):

Step	Action
1	Remove the power from the controller or the expansion module.
2	Insert a flat screwdriver into the spring docking devices.
3	Pull down the spring docking device to move it to its standby position.
4	Pull the controller or the expansion module from the top hat section rail (DIN rail) from the bottom.

Vertical surface Installation

The following procedure describes how to install a TM173OB••••/TM173OD•••• / TM173ODEM22R / TM173O•••••H controller or an expansion module on a panel.

To install the controllers and expansion modules on a panel you must use clip-on locks.

NOTE: Upper clip-on locks are not provided with the logic controllers and must be ordered separately.

Step	Action
1	Install the 2 upper clip-on locks 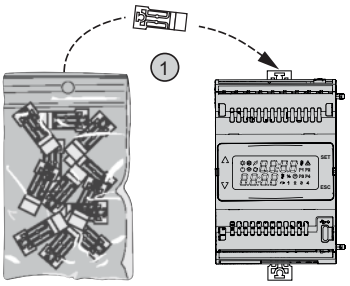
2	Move the 2 lower clip-on locks to their standby position 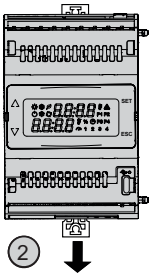
3	Secure the device in position with 4 screws. Refer to the mounting holes layout, page 42.

Mounting Holes Layout

TM173OB••••

TM173OD••••

TM173ODEM22R

TM173O•••••H

TM172E••R

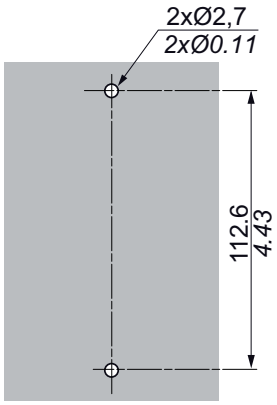

TM172EVEVBAT Battery Backup Installation

Overview

The TM172EVEVBAT battery backup must be plugged to a TM173ODEM22R to perform an emergency closing.

In case of TM173ODEM22R power supply outage, to be able to close the driven valve, one or two TM172EVEVBAT modules have to be plugged to the controller, according to the valve model.

For details on the number of modules to be installed, refer to Modicon M172 Electronic Expansion Valve Driver, Preconfigured Valves Parameters Guide.

For more details about installation of TM172EVEVBAT battery backup, refer to Modicon M172 Electronic Expansion Valve Driver, User Guide.

Installation of one TM172EVEVBAT

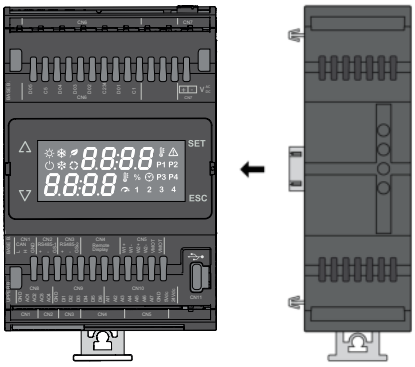

Installation of two TM172EVEVBAT

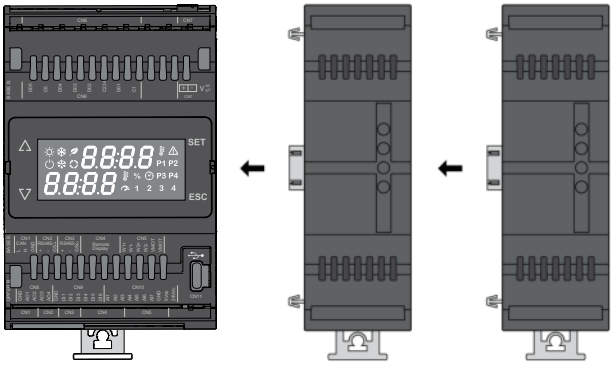

Commissioning

Once installed, you have to indicate the number of installed battery backup modules on your TM173ODEM22R controller. To do this, you must update the value of the parameter n36, page 124.

TM173DLED Remote Display Installation

Overview

This section shows how to install TM173DLED remote display using the special brackets provided. This section also provides mounting hole layout.

Correct Mounting Position

The TM173DLED remote display must be mounted horizontally on a vertical panel as shown in the figure below:

Mounting Hole Layout

The following diagram shows the mounting hole layout for TM173DLED remote display:

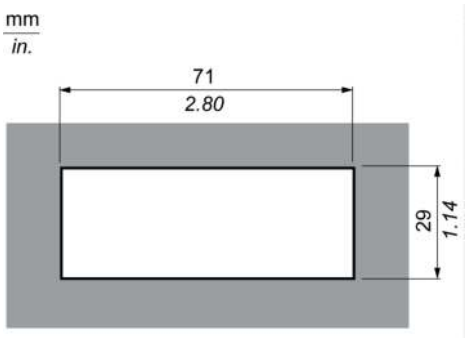

Installing TM173DLED on Panel

The following procedure shows how to install TM173DLED remote display:

Step	Action
1	Make a 29x71 mm (1.14 x 2. 80 in) hole using the mounting hole layout.
2	Insert the device.

Step	Action
3	Secure it with the special brackets provided: 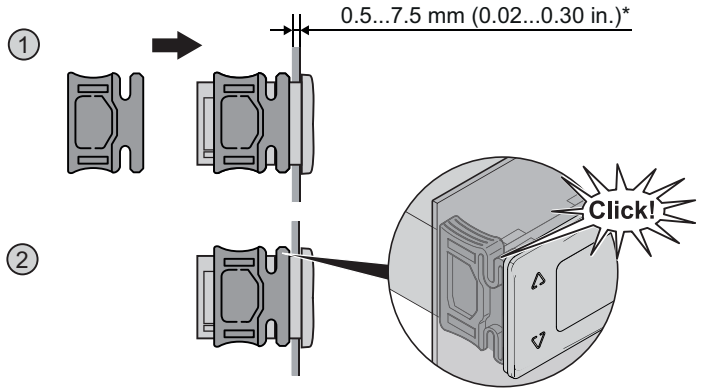

* Front panel only (tested in accordance with EN 60529 with a steel sheet 2 mm (0.08 in.) thick ±10%).

TM173OF•••• Controllers Installation

Overview

This section shows how to install TM173OF•••• controller using the special brackets provided. This section also provides mounting hole layout.

Correct Mounting Position

The TM173OF•••• controller must be mounted horizontally on a vertical panel as shown in the figure below:

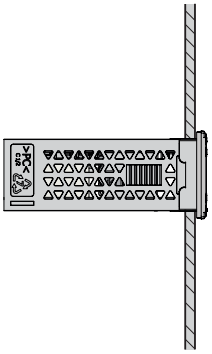

Mounting Hole Layout

The following diagram shows the mounting hole layout for TM173OF•••• controller:

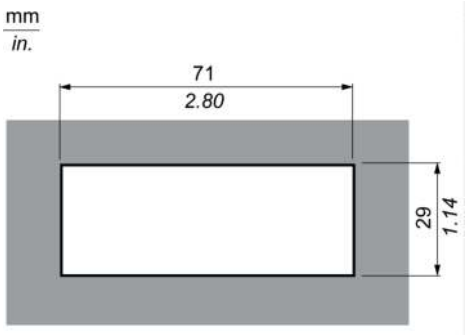

Installing TM173OF•••• on Panel

The following procedure shows how to install TM173OF•••• controller:

Step	Action
1	Make a 29x71 mm (1.14 x 2. 80 in) hole using the mounting hole layout.
2	Insert the device.
3	Secure it with the special brackets provided: 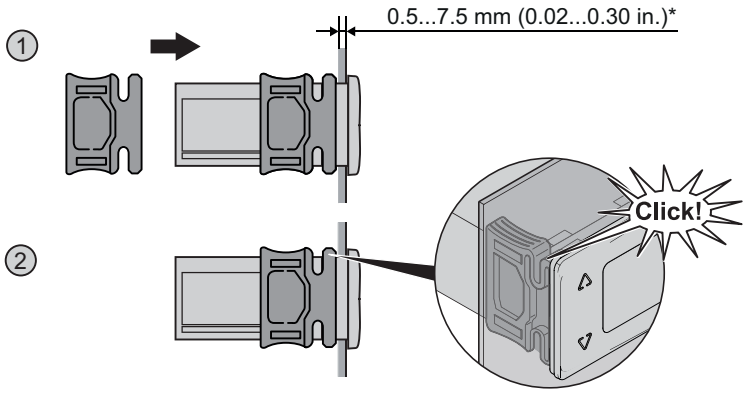

* Front panel only (tested in accordance with EN 60529 with a steel sheet 2 mm (0.08 in.) thick ±10%).

Controllers and Expansion Modules

What's in This Part

Environmental Characteristics 48
24 Vac/Vdc Controllers Description 50
110/240 Vac Controllers Description 64
TM172E••R Expansion Modules Description 69
Electrical Characteristics and Wiring Diagrams 73

Environmental Characteristics

Technical Data

The Modicon M173 Optimized Logic Controller offer components meet European Community (CE) requirements for open equipment. These products shall be installed in an enclosure or other location designed for the specific environmental conditions and to minimize the possibility of unintended contact with hazardous voltages. Metal enclosures shall be used to improve the electromagnetic immunity of the M173O system. This equipment meets CE requirements as indicated in the following tables.

⚠ WARNING

UNINTENDED EQUIPMENT OPERATION

Do not exceed any of the rated values specified within this chapter.

Failure to follow these instructions can result in death, serious injury, or equipment damage.

Controller and Expansion Modules Specifications

Characteristics	Specification	TM173OB••••	TM173OD••••	TM173ODEM22R	TM173OF••••	TM173O••••H	TM172E12R	TM172E28R
The product complies with the following harmonized Standards	EN 60730-1 / EN 60730-2-9	✓						
Construction of control	Electronic automatic Incorporated Control	✓						
Purpose of control	Operating control (non-safety-related)	✓						
Mounting	Top Hat Section Rail (DIN rail)	✓						
	Optional panel mounting (with accessories)	✓						
Type of action	1.B	✓		-			✓	
	1.Y	✓				-		
	1.C	-		✓			-	
	1	-				✓	-	
Pollution degree	2 (normal)	✓						
Over-voltage category	II	✓						
Rated impulse voltage	2500 V	✓						
Power supply	24 Vac (+/- 10 %) 50 Hz / 60 Hz 20…38 Vdc (non-isolated)	-			✓	-	✓	
	24 Vac (+/- 10 %) 50 Hz / 60 Hz 20…38 Vdc (isolated)	✓			-			
	100...240 Vac (+/- 10 %) (isolated)	-				✓	-	
Power Draw	24 VA / 15 W	-					✓	

Characteristics	Specification	TM173OB•••	TM173OD•••	TM173ODEM22R	TM173OF•••	TM173O••••H	TM172E12R	TM172E28R
	10 W	✓		-	✓		-	
	18 W	-		✓	-			
Ambient operating temperature	-20…55 °C (-4…131 °F)	-		✓			-	
	-20…65 °C (-4…149 °F)	✓		-			✓	
Ambient operating humidity (non-condensing)	5…95 %	✓						
Ambient storage temperature	-40…70 °C (-40…158 °F)	✓						
Ambient storage humidity (non-condensing)	5…95 %	✓						
Environmental front panel rating	Open Type	✓						
Software class	A	✓						
Operating altitude	0...2000 m (0...6560 ft)	✓						
Digital outputs	Refer to the label on the device	✓						
Degree of protection by enclosure	IP20	✓			-	✓		
	IP65(1)	-			✓	-		

(1) Front panel only (tested in accordance with EN 60529 with a steel sheet 2 mm (0.08 in.) thick ±10%).

24 Vac/Vdc Controllers Description

What's in This Chapter

TM173ODM15R.....50
TM173OBM22R.....53
TM173ODM22R / TM173ODM22S.....56
TM173OF•••• 59
TM173ODEM22R.....61

TM173ODM15R

Overview

Reference	Description
TM173ODM15R	M173 Optimized Display 15 I/Os, 2 RS-485

Physical Description

The following illustration presents the TM173ODM15R controller:

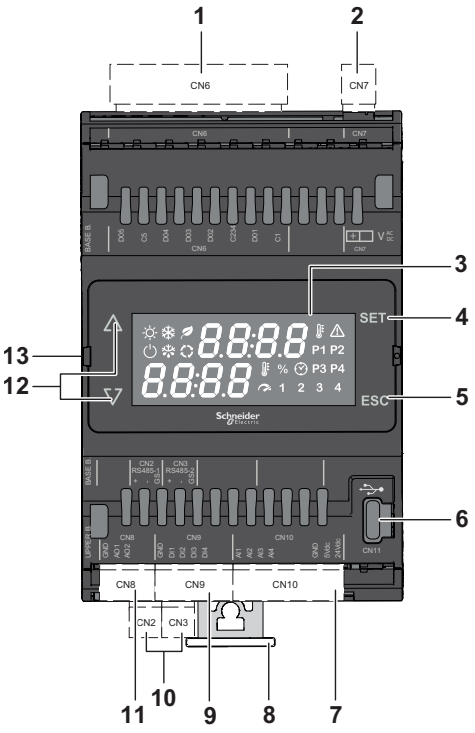

Number	Name	Description	
1	CN6	DO1	High voltage relay digital output 250 Vac 3 A SPST, page 78
		DO2…DO4	High voltage relay digital output 250 Vac 3 A SPST, page 78
		DO5	High voltage relay digital output 250 Vac 3 A SPST, page 78
2	CN7	24 Vac/dc power supply, page 75	
3	-	User Interface - Display, page 104	
4	-	User Interface - Enter key, page 104	
5	-	User Interface - Escape key, page 104	

Number	Name	Description	
6	CN11	USB type C for PC connection, page 95	
7	CN10	Power out	+24 Vdc power out for analog inputs, max current 125 mA +5 Vdc power out for ratiometric analog inputs, max current 50 mA
		AI1…AI4	Analog inputs are configurable as: • NTC resistive input or digital input • Current analog input • Voltage analog input ((0...5 V ratiometric / 0...10 V) • PTC resistive input • Pt1000 resistive input
8	-	Clip-on lock, page 40	
9	CN9	DI1…DI4	Dry contact digital inputs, page 77
10	CN2	RS-485 serial port-1, page 93	
	CN3	RS-485 serial port-2, page 93	
11	CN8	AO1	Low voltage SELV analog output, configurable as, page 88: • Current modulation analog output • Voltage modulation analog output (0...10 V)
		AO2	Low voltage SELV analog outputs, configurable as, page 88: • Voltage modulation analog output (0...10 V) • PWM open collector
12	-	User Interface - Navigation keys, page 104	
13	-	Connector to communication module, page 97	

NOTE: Some analog inputs (AI), analog outputs (AO) and digital inputs (DI) will be visible from EcoStruxure Machine Expert - HVAC, but the values are not reliable since the inputs / outputs are not present. AI5, AI6, AI7, AO3, AO4, DI5, and DI6 are not present in TM173ODM15R.

NOTICE

INOPERABLE EQUIPMENT

Configure the analog inputs and outputs, and related parameters, according to the physical types of resources connected.

Failure to follow these instructions can result in equipment damage.

For more details, refer to analog inputs configuration and analog outputs configuration, page 88.

For more information about the wiring, refer to wiring best practices, page 29.

Dimensions

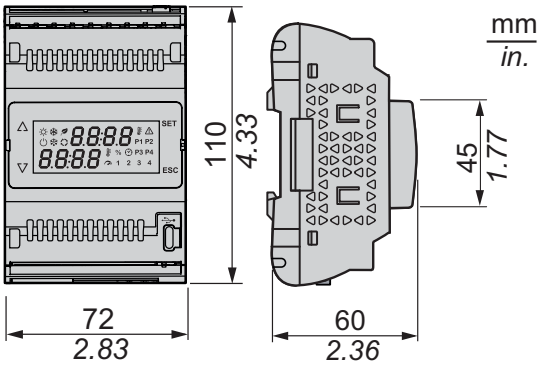

Mounting Holes Layout

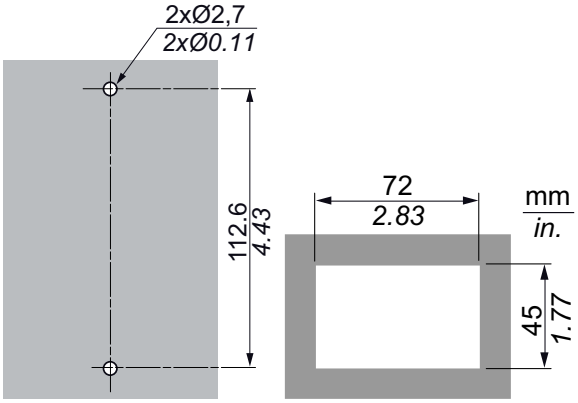

TM173OBM22R

Overview

Reference	Description
TM173OBM22R	M173 Optimized Blind 22 I/Os, 2 RS-485

Physical Description

The following illustration presents the TM173OBM22R controller:

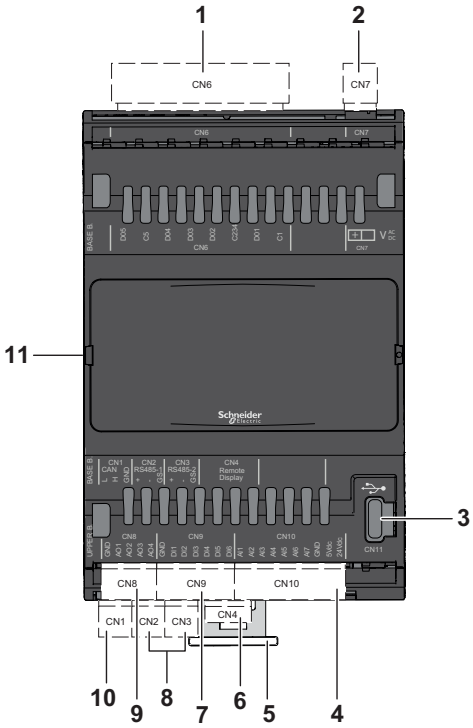

Number	Name	Description	
1	CN6	DO1	High voltage relay digital output 250 Vac 3 A SPST, page 78
		DO2…DO4	High voltage relay digital output 250 Vac 3 A SPST, page 78
		DO5	High voltage relay digital output 250 Vac 3 A SPST, page 78
2	CN7	24 Vac/dc power supply, page 75	
3	CN11	USB type C for PC connection, page 95	
4	CN10	Power out	+24 Vdc power out for analog inputs, max current 125 mA +5 Vdc power out for ratiometric analog inputs, max current 50 mA
		AI1…AI6	Analog inputs are configurable as: • NTC resistive input or digital input • Current analog input • Voltage analog input ((0...5 V ratiometric / 0...10 V) • PTC resistive input • Pt1000 resistive input
		AI7	Analog input is configurable as: • NTC resistive input or digital input • Voltage analog input (0...10 V) • PTC resistive input • Pt1000 resistive input

Number	Name	Description	
5	-	Clip-on lock, page 40	
6	CN4	Remote Display connector, page 102	
7	CN9	DI1…DI6	Dry contact digital inputs, page 77
8	CN2	RS-485 serial port-1, page 93	
	CN3	RS-485 serial port-2, page 93	
9	CN8	AO1	Low voltage SELV analog outputs, configurable as, page 88: • Current modulation analog output • Voltage modulation analog output (0...10 V)
		AO2...AO4	Low voltage SELV analog outputs, configurable as, page 88: • Voltage modulation analog output (0...10 V) • PWM open collector
10	CN1	CAN expansion bus master, page 91	
11	-	Connector to communication module, page 97	

NOTICE

INOPERABLE EQUIPMENT

Configure the analog inputs and outputs, and related parameters, according to the physical types of resources connected.

Failure to follow these instructions can result in equipment damage.

For more details, refer to analog inputs configuration and analog outputs configuration, page 88.

For more information about the wiring, refer to wiring best practices, page 29.

Dimensions

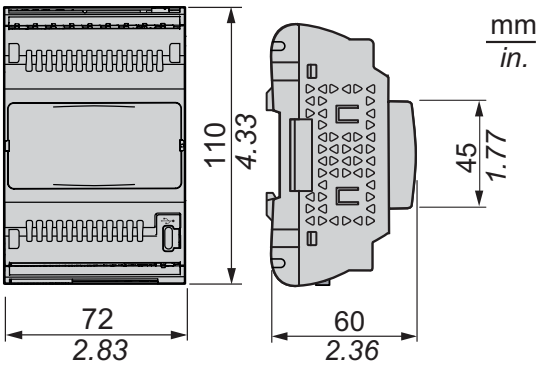

Mounting Holes Layout

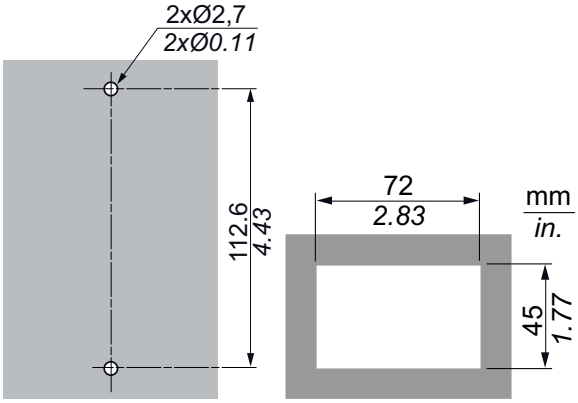

TM173ODM22R / TM173ODM22S

Overview

Reference	Description
TM173ODM22R	M173 Optimized Display 22 I/Os, 2 RS-485
TM173ODM22S	M173 Optimized Display 22 I/Os, 2 RS-485, 2 SSR

Physical Description

The following illustration presents the TM173ODM22R / TM173ODM22S controller:

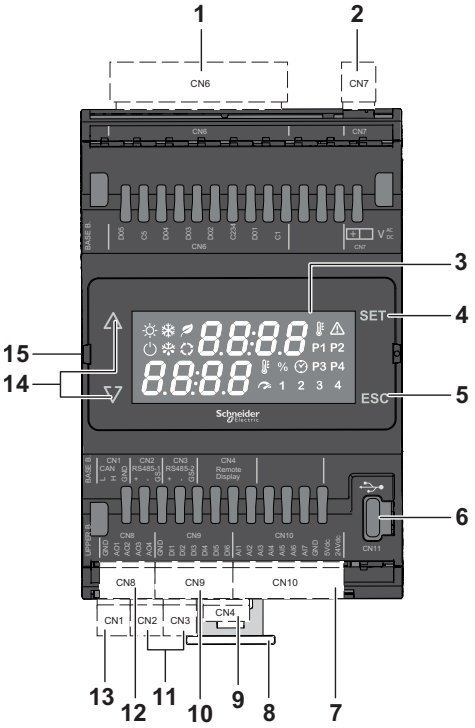

Number	Name	Description	
1	CN6	DO1	• TM173ODM22R: High voltage relay digital output 250 Vac 3 A SPST, page 78 • TM173ODM22S: High voltage SSR digital output 240 Vac 0.5 A, page 80
		DO2…DO4	High voltage relay digital output 250 Vac 3 A SPST, page 78
		DO5	• TM173ODM22R: High voltage relay digital output 250 Vac 3 A SPST, page 78 • TM173ODM22S: High voltage SSR digital output 240 Vac 0.5 A, page 80
2	CN7	24 Vac/dc power supply, page 75	
3	-	User Interface - Display, page 104	
4	-	User Interface - Enter key, page 104	
5	-	User Interface - Escape key, page 104	
6	CN11	USB type C for PC connection, page 95	
7	CN10	Power out	+24 Vdc power out for analog inputs, max current 125 mA +5 Vdc power out for ratiometric analog inputs, max current 50 mA
		AI1…AI6	Analog inputs are configurable as: • NTC resistive input or digital input • Current analog input

Number	Name	Description	
			• Voltage analog input ((0...5 V ratiometric / 0...10 V) • PTC resistive input • Pt1000 resistive input
		AI7	Analog input is configurable as: • NTC resistive input or digital input • Voltage analog input (0...10 V) • PTC resistive input • Pt1000 resistive input
8	-	Clip-on lock, page 40	
9	CN4	Remote Display connector, page 102	
10	CN9	DI1…DI6	Dry contact digital inputs, page 77
11	CN2	RS-485 serial port-1, page 93	
	CN3	RS-485 serial port-2, page 93	
12	CN8	AO1	Low voltage SELV analog output, configurable as, page 88: • Current modulation analog output • Voltage modulation analog output (0...10 V)
		AO2…AO4	Low voltage SELV analog outputs, configurable as, page 88: • Voltage modulation analog output (0...10 V) • PWM open collector
13	CN1	CAN expansion bus master, page 91	
14	-	User Interface - Navigation keys, page 104	
15	-	Connector to communication module, page 97	

NOTICE

INOPERABLE EQUIPMENT

Configure the analog inputs and outputs, and related parameters, according to the physical types of resources connected.

Failure to follow these instructions can result in equipment damage.

For more details, refer to analog inputs configuration and analog outputs configuration, page 88.

For more information about the wiring, refer to wiring best practices, page 29.

Dimensions

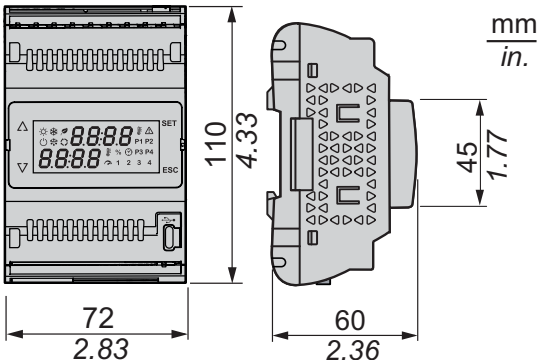

Mounting Holes Layout

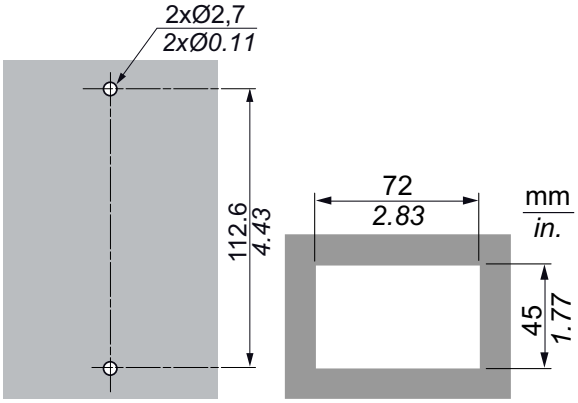

TM173OF••••

Overview

Reference	Description
TM173OFM22R	M173 Optimized Flush 22 I/Os, 2 RS-485
TM173OFM22S	M173 Optimized Flush 22 I/Os, 2 RS-485, 2 SSR

Physical Description

The following illustration presents a TM173OF•••• controller:

Front view

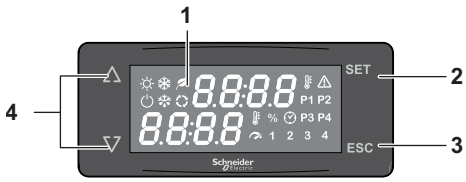

Rear view

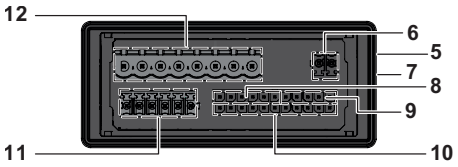

Number	Description	
1	User Interface - Display, page 104	
2	User Interface - Enter key, page 104	
3	User Interface - Escape key, page 104	
4	User Interface - Navigation keys, page 104	
5	Connector to communication module	
6	24 Vac/dc power supply, page 75	
7	USB type C for PC connection, page 95	
8	DI1…DI6	Dry contact digital inputs, page 77
9	AO1	Low voltage SELV analog output, configurable as, page 88: • Current modulation analog output • Voltage modulation analog output (0...10 V)
	AO2…AO4	Low voltage SELV analog outputs, configurable as, page 88: • Voltage modulation analog output (0...10 V) • PWM open collector
10	Power out	+24 Vdc power out for analog inputs, max current 125 mA +5 Vdc power out for ratiometric analog inputs, max current 50 mA
	AI1…AI6	Analog inputs are configurable as: • NTC resistive input or digital input • Current analog input • Voltage analog input ((0...5 V ratiometric / 0...10 V) • PTC resistive input • Pt1000 resistive input
	AI7	Analog input is configurable as: • NTC resistive input or digital input • Voltage analog input (0...10 V) • PTC resistive input • Pt1000 resistive input
11	RS-485 serial port-1, page 93	

Number	Description	
	RS-485 serial port-2, page 93	
12	DO1	• TM173OFM22R: High voltage relay digital output 250 Vac 3 A SPST, page 78 • TM173OFM22S: High voltage SSR digital output 240 Vac 0.5 A, page 80
	DO2…DO4	High voltage relay digital output 250 Vac 3 A SPST, page 78
	DO5	• TM173OFM22R: High voltage relay digital output 250 Vac 3 A SPST, page 78 • TM173OFM22S: High voltage SSR digital output 240 Vac 0.5 A, page 80

NOTICE

INOPERABLE EQUIPMENT

Configure the analog inputs and outputs, and related parameters, according to the physical types of resources connected.

Failure to follow these instructions can result in equipment damage.

For more details, refer to analog inputs configuration and analog outputs configuration, page 88.

For more information about the wiring, refer to wiring best practices, page 29.

Dimensions

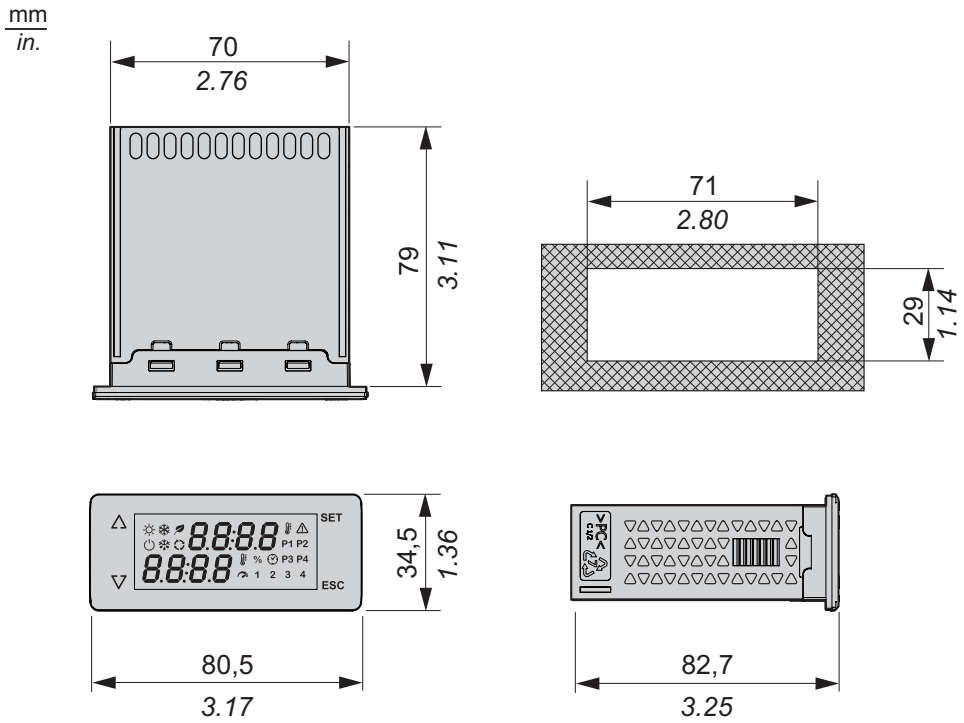

TM173ODEM22R

Overview

Reference	Description
TM173ODEM22R	M173 Optimized Display 22 I/Os, EEVD, 2 RS-485

Physical Description

The following illustration presents the TM173ODEM22R controller:

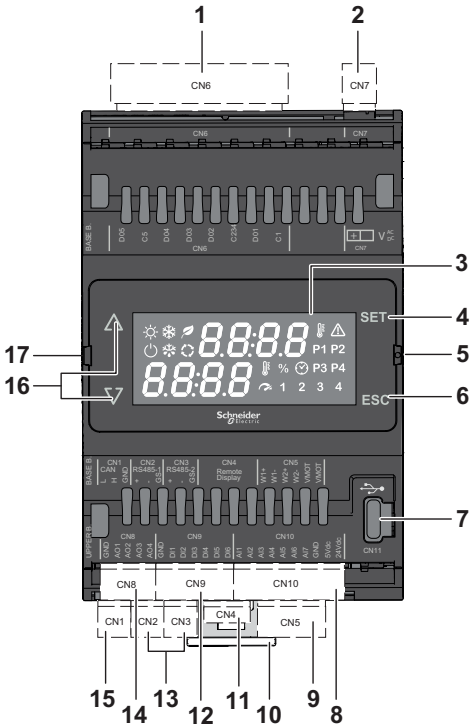

Number	Name	Description	
1	CN6	DO1	High voltage relay digital output 250 Vac 3 A SPST, page 78
		DO2…DO4	
		DO5	
2	CN7	24 Vac/dc power supply, page 75	
3	-	User Interface - Display, page 104	
4	-	User Interface - Enter key, page 104	
5	-	Battery backup socket connector, page 97	
6	-	User Interface - Escape key, page 104	
7	CN11	USB type C for PC connection, page 95	
8	CN10	Power out	+24 Vdc power out for analog inputs, max current 125 mA +5 Vdc power out for ratiometric analog inputs, max current 50 mA
		AI1…AI6	Analog inputs are configurable as: • NTC resistive input or digital input • Current analog input • Voltage analog input ((0...5 V ratiometric / 0...10 V) • PTC resistive input • Pt1000 resistive input

Number	Name	Description	
		AI7	Analog input is configurable as: • NTC resistive input or digital input • Voltage analog input (0...10 V) • PTC resistive input • Pt1000 resistive input
9	CN5	Valve driver output, page 90	
10	-	Clip-on lock, page 40	
11	CN4	Remote Display connector, page 102	
12	CN9	DI1…DI6	Dry contact digital inputs, page 77
13	CN2	RS-485 serial port-1, page 93	
	CN3	RS-485 serial port-2, page 93	
14	CN8	AO1	Low voltage SELV analog output, configurable as, page 88: • Current modulation analog output • Voltage modulation analog output (0...10 V)
		AO2…AO4	Low voltage SELV analog outputs, configurable as, page 88: • Voltage modulation analog output (0...10 V) • PWM open collector
15	CN1	CAN expansion bus master, page 91	
16	-	User Interface - Navigation keys, page 104	
17	-	Connector to communication module, page 97	

NOTICE

INOPERABLE EQUIPMENT

Configure the analog inputs and outputs, and related parameters, according to the physical types of resources connected.

Failure to follow these instructions can result in equipment damage.

For more details, refer to analog inputs configuration and analog outputs configuration, page 88.

For more information about the wiring, refer to wiring best practices, page 29.

Dimensions

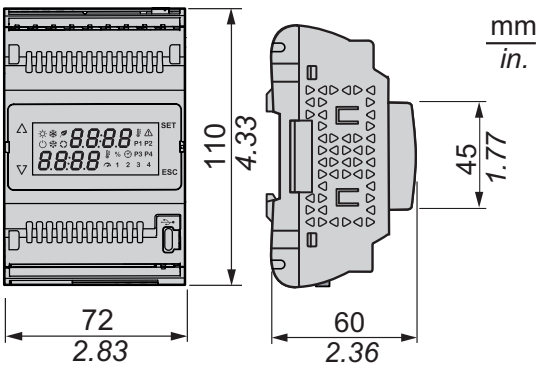

Mounting Holes Layout

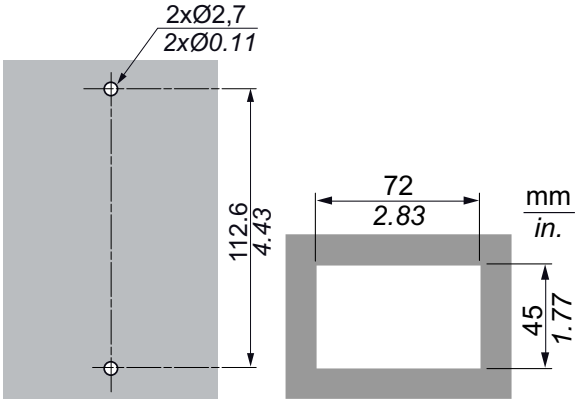

110/240 Vac Controllers Description

What's in This Chapter

TM173OBM22RH.....64
TM173ODM22RH / TM173ODM22SH 66

TM173OBM22RH

Overview

Reference	Description
TM173OBM22RH	M173 Optimized Blind 22 I/Os, 2 RS-485 100-240Vac

Physical Description

The following illustration presents the TM173OBM22RH controller:

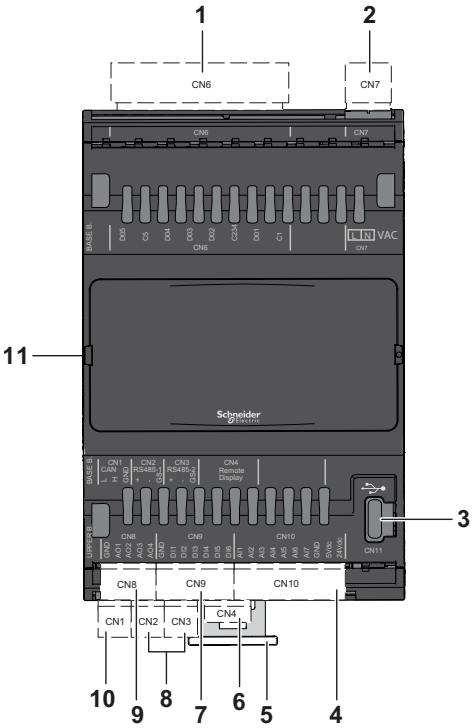

Number	Name	Description	
1	CN6	DO1	High voltage relay digital output 240 Vac 3 A SPST, page 78
		DO2…DO4	High voltage relay digital output 240 Vac 3 A SPST, page 78
		DO5	High voltage relay digital output 240 Vac 3 A SPST, page 78
2	CN7	100...240Vac power supply, page 74	
3	CN11	USB type C for PC connection, page 95	
4	CN10	Power out	+24 Vdc power out for analog inputs, max current 125 mA +5 Vdc power out for ratiometric analog inputs, max current 50 mA
		AI1…AI6	Analog inputs are configurable as: • NTC resistive input or digital input • Current analog input

Number	Name	Description	
			• Voltage analog input ((0...5 V ratiometric / 0...10 V) • PTC resistive input • Pt1000 resistive input
		AI7	Analog input is configurable as: • NTC resistive input or digital input • Voltage analog input (0...10 V) • PTC resistive input • Pt1000 resistive input
5	-	Clip-on lock, page 40	
6	CN4	Remote Display connector, page 102	
7	CN9	DI1…DI6	Dry contact digital inputs, page 77
8	CN2	RS-485 serial port-1, page 93	
	CN3	RS-485 serial port-2, page 93	
9	CN8	AO1	Low voltage SELV analog output, configurable as, page 88: • Current modulation analog output • Voltage modulation analog output
		AO2…AO4	Low voltage SELV analog outputs, configurable as, page 88: • Voltage modulation analog output • PWM open collector
10	CN1	CAN expansion bus master, page 91	
11	-	Connector to communication module, page 97	

NOTICE

INOPERABLE EQUIPMENT

Configure the analog inputs and outputs, and related parameters, according to the physical types of resources connected.

Failure to follow these instructions can result in equipment damage.

For more details, refer to analog inputs configuration and analog outputs configuration, page 88.

For more information about the wiring, refer to wiring best practices, page 29.

Dimensions

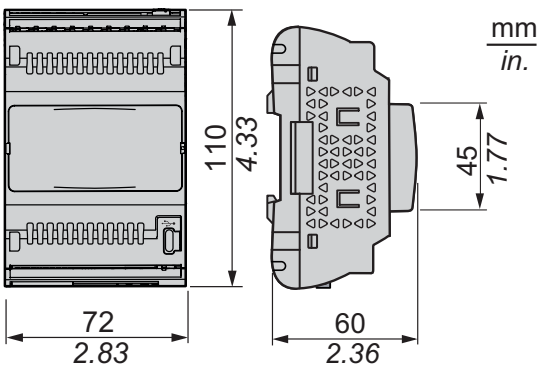

Mounting Holes Layout

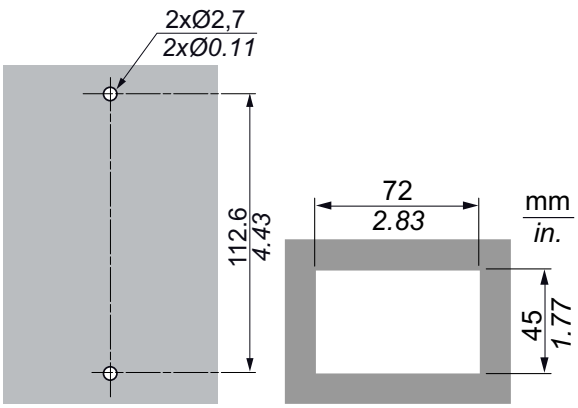

TM173ODM22RH / TM173ODM22SH

Overview

Reference	Description
TM173ODM22RH	M173 Optimized Display 22 I/Os, 2 RS-485 100-240Vac
TM173ODM22SH	M173 Optimized Display 22 I/Os, 2 RS-485, 2 SSR 100-240Vac

Physical Description

The following illustration presents the TM173ODM22RH / TM173ODM22SH controller:

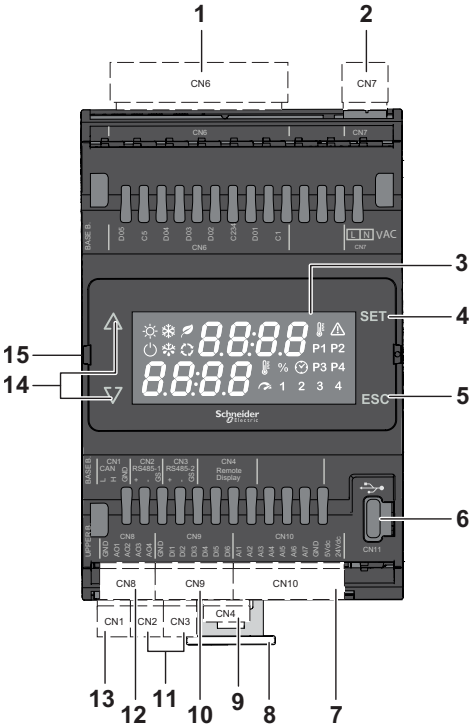

Number	Name	Description	
1	CN6	DO1	• TM173ODM22RH: High voltage relay digital output 240 Vac 3 A SPST, page 78 • TM173ODM22SH: High voltage SSR digital output 240 Vac 2 A, page 80
		DO2…DO4	High voltage relay digital output 240 Vac 3 A SPST, page 78
		DO5	• TM173ODM22RH: High voltage relay digital output 240 Vac 3 A SPST, page 78 • TM173ODM22SH: High voltage SSR digital output 240 Vac 2 A, page 80
2	CN7	100...240Vac power supply, page 74	
3	-	User Interface - Display, page 104	
4	-	User Interface - Enter key, page 104	
5	-	User Interface - Escape key, page 104	
6	CN11	USB type C for PC connection, page 95	
7	CN10	Power out	+24 Vdc power out for analog inputs, max current 125 mA +5 Vdc power out for ratiometric analog inputs, max current 50 mA
		AI1…AI6	Analog inputs are configurable as: • NTC resistive input or digital input • Current analog input • Voltage analog input ((0...5 V ratiometric / 0...10 V) • PTC resistive input • Pt1000 resistive input
		AI7	Analog input is configurable as: • NTC resistive input or digital input • Voltage analog input (0...10 V) • PTC resistive input • Pt1000 resistive input
8	-	Clip-on lock, page 40	
9	CN4	Remote Display connector, page 102	
10	CN9	DI1…DI6	Dry contact digital inputs, page 77
11	CN2	RS-485 serial port-1, page 93	
	CN3	RS-485 serial port-2, page 93	
12	CN8	AO1	Low voltage SELV analog output, configurable as, page 88: • Current modulation analog output • Voltage modulation analog output
		AO2…AO4	Low voltage SELV analog outputs, configurable as, page 88: • Voltage modulation analog output • PWM open collector
13	CN1	CAN expansion bus master, page 91	
14	-	User Interface - Navigation keys, page 104	
15	-	Connector to communication module, page 97	

NOTICE

INOPERABLE EQUIPMENT

Configure the analog inputs and outputs, and related parameters, according to the physical types of resources connected.

Failure to follow these instructions can result in equipment damage.

For more details, refer to analog inputs configuration and analog outputs configuration, page 88.

For more information about the wiring, refer to wiring best practices, page 29.

Dimensions

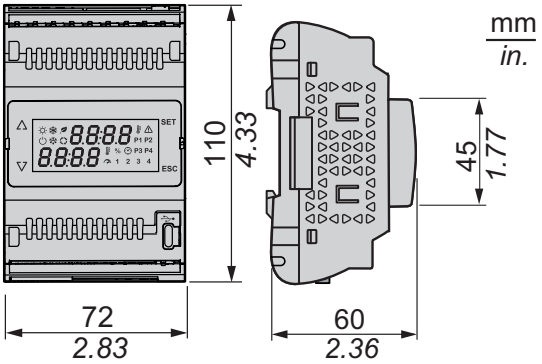

Mounting Holes Layout

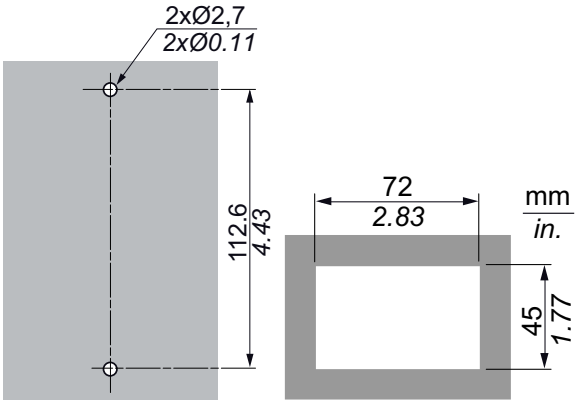

TM172E••R Expansion Modules Description

What's in This Chapter

TM172E12R 69
TM172E28R 71

TM172E12R

Physical Description

The following illustration presents the TM172E12R expansion module:

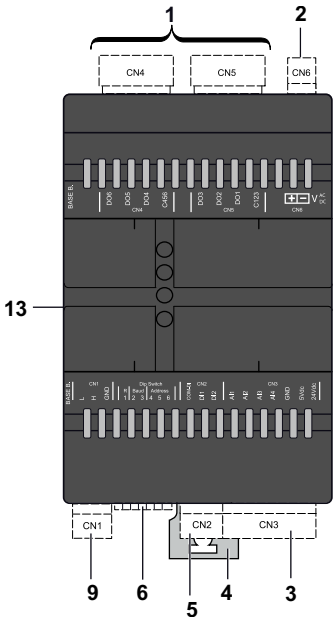

Number	Name	Description	
1	CN4	DO4…DO6	High voltage relay digital output 250 Vac 3 A SPST
	CN5	DO1…DO3	
2	CN6	24 Vac/dc non-isolated power supply	
3	CN3	Power out	+24 Vdc power out for analog inputs, max current 125 mA +5 Vdc power out for ratiometric analog inputs, max current 50 mA (1)
		AI1…AI4	Analog inputs are configurable as: • NTC resistive input or digital input • Current analog input • Voltage analog input • PTC resistive input
4	-	Clip-on lock, page 35	
5	CN2	DI1…DI2	Fast digital input, pulse/frequency counter up 2 kHz, opto-isolated
6	-	CAN configuration 6-position DIP switches	
9	CN1	CAN expansion bus slave	
13	-	TTL Port (Service only)	
(1) 0...5 V Ratiometric: ratiometric range is 0.5 V to 4.5 V. Maximum current at +5 Vdc is 50 mA.			

NOTE: The expansion module is delivered without removable screw terminal blocks.

NOTICE

INOPERABLE EQUIPMENT

Configure the analog inputs and outputs, and related parameters, according to the physical types of resources connected.

Failure to follow these instructions can result in equipment damage.

For more details, refer to analog inputs configuration and analog outputs configuration.

For more information about the wiring, refer to wiring best practices.

For details about Expansion module troubleshooting, refer to the section TM172E••R Expansion Modules User Interface, page 108.

Dimensions

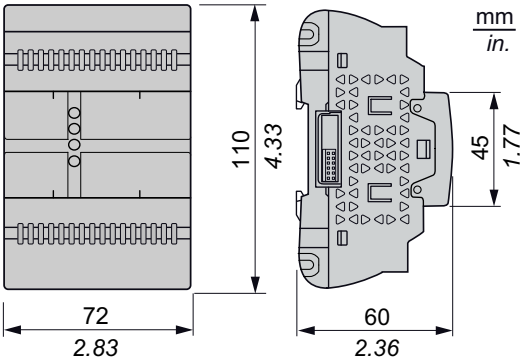

Mounting Holes Layout

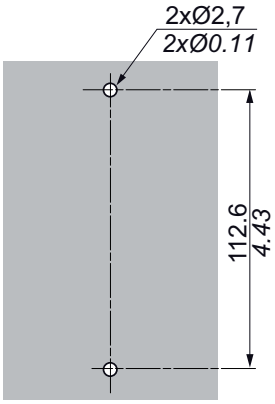

TM172E28R

Physical Description

The following illustration presents the TM172E28R expansion module:

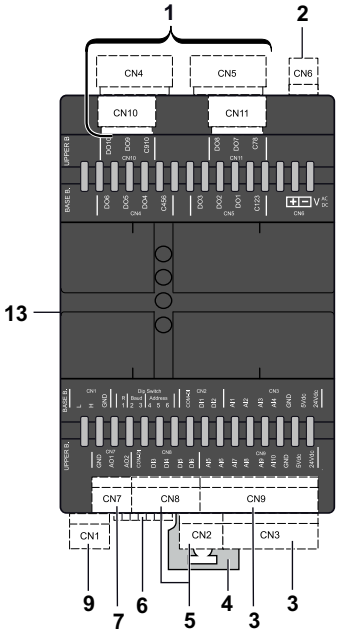

Number	Name	Description	
1	CN4	DO4…DO6	High voltage relay digital output 250 Vac 3 A SPST
	CN5	DO1…DO3	
	CN10	DO9…DO10	
	CN11	DO7…DO8	
2	CN6	24 Vac/dc non-isolated power supply	
3	CN3	Power out	+24 Vdc power out for analog inputs, max current 125 mA (2) +5 Vdc power out for ratiometric analog inputs, max current 50 mA (1)(2)
		AI1…AI4	Analog inputs are configurable as: • NTC resistive input or digital input • Current analog input • Voltage analog input • PTC resistive input
	CN9	AI5…AI10	Identical to CN3.
		Power out	
4	-	Clip-on lock, page 35	
5	CN2	DI1…DI2	Fast digital input, pulse/frequency counter up 2 kHz, opto-isolated
	CN8	DI3…DI6	Regular digital input opto-isolated
6	-	CAN configuration 6-position DIP switches	
7	CN7	AO1…AO2	Low voltage SELV analog outputs, configurable as: • Current modulation analog output • Current ON/OFF analog output • Voltage modulation analog output • PWM open collector
9	CN1	CAN expansion bus slave	

Number	Name	Description
13	-	TTL Port (Service only)
(1) 0...5 V Ratiometric: ratiometric range is 0.5 V to 4.5 V. Maximum current at +5 Vdc is 50 mA. **(2)** The maximum current value is the sum between the maximum currents supplied by the corresponding terminals in the CN3 connector and in the CN9 connector.		

NOTE: The expansion module is delivered without removable screw terminal blocks.

NOTICE

INOPERABLE EQUIPMENT

Configure the analog inputs and outputs, and related parameters, according to the physical types of resources connected.

Failure to follow these instructions can result in equipment damage.

For more details, refer to analog inputs configuration and analog outputs configuration.

For more information about the wiring, refer to wiring best practices.

For details about Expansion module troubleshooting, refer to the section TM172E••R Expansion Modules User Interface, page 108.

Dimensions

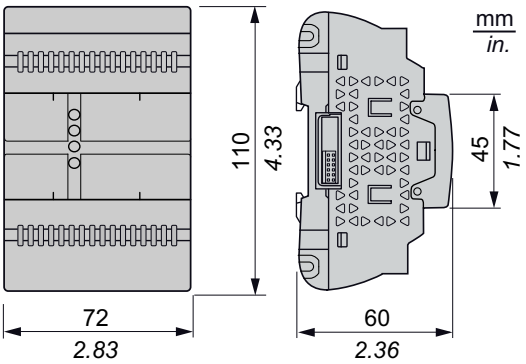

Mounting Holes Layout

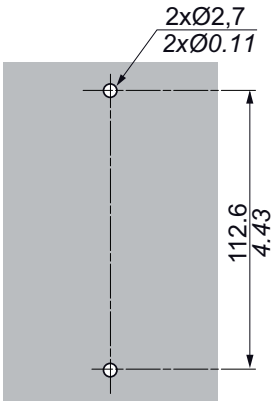

Electrical Characteristics and Wiring Diagrams

What's in This Chapter

Connectors 73
Cabling Length 74
Power Supply 74
Inputs and Outputs 77
Digital Input 77
Digital Output 78
Analog Input 81
Analog Output 88
Valve Output 90
Communication 91
Memory 97
RTC (Real Time Clock) 98

Connectors

Connectors

M173O Connectors Characteristics

The M173O devices are delivered with removable terminal blocks:

TM173ODM15R	TM173ODEM22R TM173ODM22R TM173ODM22S	TM173OB••••	TM173O•••••H	TM173OF••••
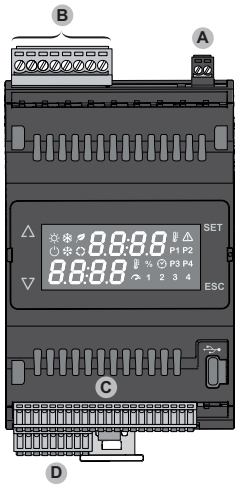	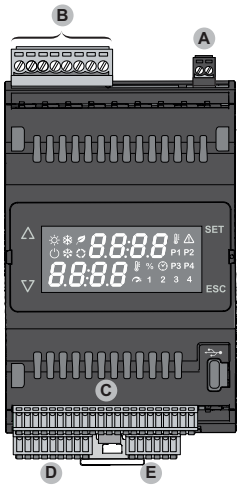	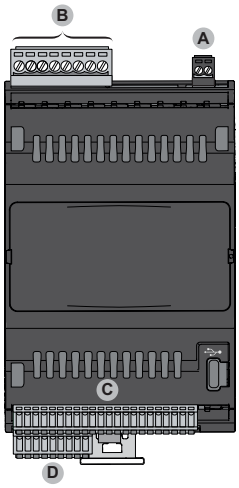	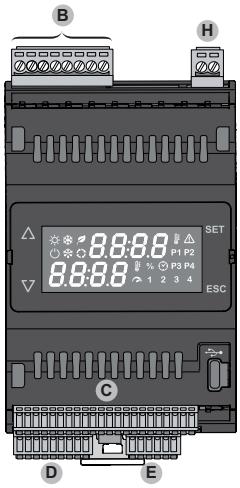	

Connectors, terminal blocks, and cables description:

Type	Item	Connector Description	
Low voltage	A	2-way low voltage connector	Supplied socket connector block Pitch 3.50 mm (0.14 in.), page 29
High voltage	B	8-way high voltage connector	Supplied socket connector block Pitch 5.08 mm (0.20 in.) or 5.00 mm (0.197 in.), page 29
Low voltage	C	22-way low voltage connector	Supplied socket connector block Pitch 2.50 mm (0.098 in.), page 29
	D	9-way low voltage connector	

Type	Item	Connector Description	
Valve driver output(1)	E	6-way low voltage connector	
Serial - RS-485	F	6-way low voltage connector	
Input/Output connector	G	22-way low voltage connector	
High voltage	H	2-way high voltage connector	Supplied socket connector block Pitch 5.08 mm (0.20 in.) or 5.00 mm (0.197 in.), page 29
(1) Only for TM173ODEM22R			

For more information about the wiring, refer to Wiring Best Practices, page 29.

Cabling Length

Cabling Length

Power Supply, I/O, and Serial Lines Maximum Length

Peripheral type	Maximum Length
Power supply	10 m (32.8 ft)
Embedded sensor PS	
Digital inputs	
Digital outputs	
Analog inputs	
Analog outputs	
Modbus SL Bus	1000 m (3280.8 ft)

Power Supply

Power Supply

TM173O•••••H

The TM173O•••••H requires a nominal voltage of 100…240 Vac isolated (50/60 Hz).

Power supply wiring diagram:

100…240 Vac
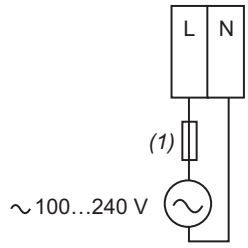
(1) Type T fuse 500 mA

Pitch of the terminal block
5.08 mm (0.20 in)

For more information about the wiring, refer to Wiring Best Practices, page 29.

⚠ DANGER

GROUND LOOP CAUSING ELECTRIC SHOCK AND/OR INOPERABLE EQUIPMENT

- Do not connect the 0 V power supply/transformer connection supplying this equipment to any external ground (earth) connection.
- Do not connect any 0 V or ground (earth) of the sensors and actuators connected to this equipment to any external ground connection.
- If necessary, use separate power supplies/transformers to power sensors or actuators isolated from this equipment.

Failure to follow these instructions will result in death or serious injury.

In all cases, if the specified voltage range is not maintained, the products may not function as intended. Use appropriate safety interlocks and voltage monitoring circuits.

TM173O••••• / TM173ODEM22R

References	Power Supply
TM173OD••••	24 Vac (+/- 10 %) isolated - 50/60 Hz 20...38 Vdc isolated
TM173OB••••	
TM173ODEM22R	
TM173OF••••	24 Vac (+/- 10 %) not isolated - 50/60 Hz (1) 20...38 Vdc not isolated (1)
(1) Isolation occuring only for RS-485 connection	

Power supply wiring diagram:

24 Vac	24 Vdc
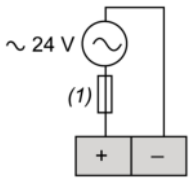	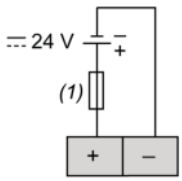
(1) Type T fuse (Controller: 1.25 A, Expansion: 1 A)	

Pitch of the terminal block
3.50 mm (0.14 in)

For more information about the wiring, refer to Wiring Best Practices, page 29.

⚠WARNING

UNINTENDED EQUIPMENT OPERATION

Do not connect the power supply to the I/O terminals.

Failure to follow these instructions can result in death, serious injury, or equipment damage.

On TM173OF•••• models, avoid connecting the GND terminals of low-voltage I/Os to any of the power supply terminals, either directly or through other devices. If the GND is connected to the controller's GND, potential differences or ground loops can occur, which can damage the TM173OF••••'s analog input. If the actuator or sensor is powered by 24 Vdc via the TM173OF••••'s 24Vout, this risk is generally absent, as long as the signal's ground reference is compatible with the controller's analog input.

Example of an incorrect connection:

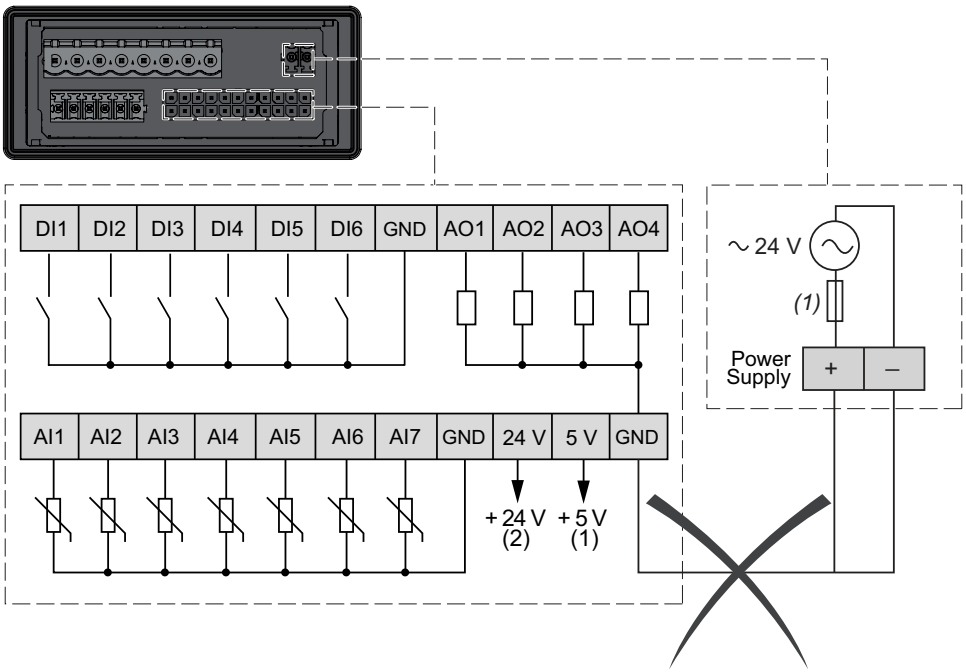

⚠DANGER

GROUND LOOP CAUSING ELECTRIC SHOCK AND/OR INOPERABLE EQUIPMENT

- Do not connect the 0 V power supply/transformer connection supplying this equipment to any external ground (earth) connection.
- Do not connect any 0 V or ground (earth) of the sensors and actuators connected to this equipment to any external ground connection.
- If necessary, use separate power supplies/transformers to power sensors or actuators isolated from this equipment.

Failure to follow these instructions will result in death or serious injury.

In all cases, if the specified voltage range is not maintained, the products may not function as intended. Use appropriate safety interlocks and voltage monitoring circuits.

⚠ WARNING

POTENTIAL OF OVERHEATING AND FIRE

- Do not connect the equipment directly to line voltage.
- Use only isolating SELV, Class 2 power supplies / transformers to supply power to this equipment.

Failure to follow these instructions can result in death, serious injury, or equipment damage.

Inputs and Outputs

Inputs and Outputs

Overview

This section presents the I/O of controllers and expansion modules.

For details on types of inputs and outputs for each device, refer to:

- 24 Vac/Vdc Controllers Description, page 50
- 110/240 Vac Controllers Description, page 64
- TM172E••R Expansion Modules Description, page 69

Numbers of Inputs and Outputs

This table presents the I/O of controllers and expansion modules:

Type	Description	Controllers										Expansion modules	
		TM173ODM15R	TM173OBM22R	TM173OBM22RH	TM173ODEM22R	TM173ODM22R	TM173ODM22RH	TM173ODM22S	TM173ODM22SH	TM173OFM22R	TM173OFM22S	TM172E12R	TM172E28R
Digital inputs	For M173O controllers: Digital inputs, page 77	4	6									2	6
Digital outputs	For M173O controllers: Digital outputs, page 78	5						3 + 2 SSR		5	3 + 2 SSR	6	10
Analog inputs	For M173O controllers: Analog Inputs, page 81	4	7									4	10
Analog outputs	For M173O controllers: Analog outputs, page 88	2	4									–	2

Digital Input

Dry Contact Digital Inputs

Characteristics

The table indicates the dry contact digital inputs characteristics:

Characteristic	Value
Type	Dry contact digital input Closing current for ground: 0.33 mA
Logic type	Digital inputs work in negative logic open contact = false close contact = true
Level 1	Resistance < 500 Ω
Level 0	Resistance > 100 kΩ
ON to OFF detection time	< 200 ms (hardware delay)
OFF to ON detection time	< 200 ms (hardware delay)
Maximum frequency measurement	2 kHz

The use of an external power supply with the dry contact digital inputs can result in equipment damage.

NOTICE
INOPERABLE EQUIPMENT Do not apply external power supply to the dry contact digital inputs of the device. **Failure to follow these instructions can result in equipment damage.**

Wiring Diagram Example

TM173O•••••• (CN9) dry contact digital input:

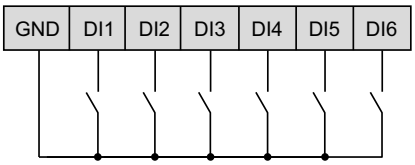

Pitch of the terminal block
2.50 mm (0.098 in)

For more information about the wiring, refer to Wiring Best Practices, page 29.

Digital Output

High Voltage Relay SPST Digital Output

Characteristics

The table indicates the digital outputs characteristics:

Characteristic	Value
Maximum voltage	250 Vac
Maximum current	3 A
Minimum switching capacity	100 mA
Electrical durability conforming to UL60730	100 000 cycles, 3 A at 250 Vac

Wiring Diagram Example

TM173OBM22R (CN6) SPST relay output:

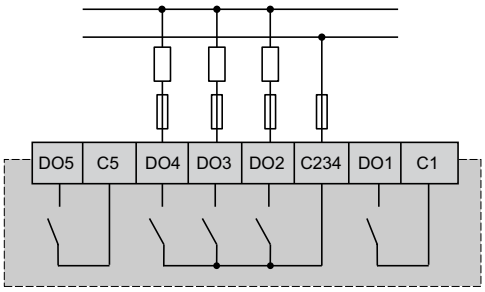

Pitch of the terminal block
5.00 mm (0.197 in)

For more information about the wiring, refer to Wiring Best Practices, page 29.

Related Devices and Connectors

The table indicates the related devices and connectors:

Related Device	Connector		Label	Description
TM173OBM22R TM173OBM22RH TM173ODEM22R TM173ODM22R TM173ODM22RH TM173ODM15R	CN6	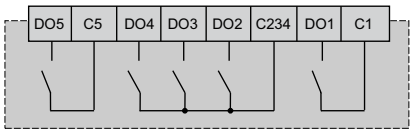	C1	Common for output relay 1 Maximum current: 3 A
			C234	Common for output relays 2...4 Maximum current: 3 A
			C5	Common for output relay 5 Maximum current: 9 A
			DO1…DO5	Output relays 1...5
TM173ODM22S TM173ODM22SH	CN6	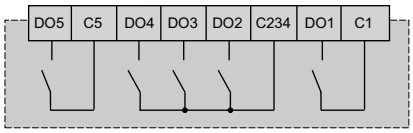	C1	Common for SSR output relay 1, page 80
			C234	Common for output relays 2...4 Maximum current: 9 A
			C5	Common for SSR output relay 5, page 80
			DO1	SSR output relay 1, page 80
			DO2…DO4	Output relays 2...4
			DO5	SSR output relay 5, page 80
TM173OFM22R	-	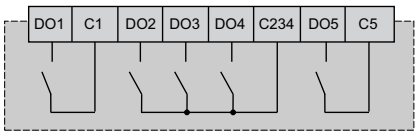	C1	Common for output relay 1 Maximum current: 3 A
			C234	Common for output relays 2...4 Maximum current: 9 A
			C5	Common for output relay 5 Maximum current: 3 A
			DO1…DO5	Output relays 1...5
TM173OFM22S	-	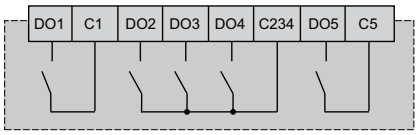	C1	Common for SSR output relay 1, page 80
			C234	Common for output relays 2...4 Maximum current: 9 A

Related Device	Connector		Label	Description
			C5	Common for SSR output relay 5, page 80
			DO1	SSR output relay 1, page 80
			DO2…DO4	Output relays 2...4
			DO5	SSR output relay 5, page 80

High Voltage Solid-State Relay Digital Output

Characteristics

The table indicates the SSR output characteristics:

Characteristic	Value
Nominal voltage	75…240 Vac
Maximum current	0.5 A
Maximum switching rate	100 Hz
Minimum switching capacity	30 mA

Wiring Diagram Example

TM173ODM22S (CN6) SSR output:

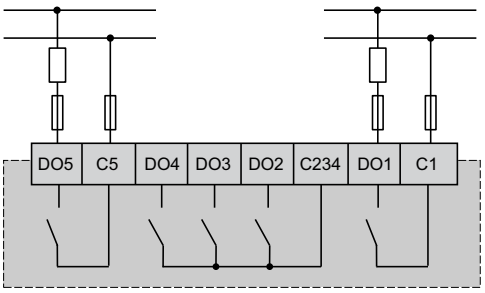

Pitch of the terminal block
5.00 mm (0.197 in)

For more information about the wiring, refer to Wiring Best Practices, page 29.

Related Devices and Connectors

The table indicates the related devices and connectors:

Related Device	Connector		Label	Description
TM173ODM22S TM173ODM22SH	CN6	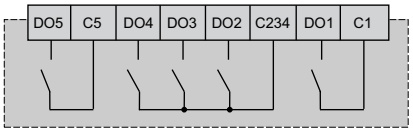	C1	Common for SSR output relay 1 Maximum current: 0.5 A
			C234	Common for SPST output relays 2...4, page 78
			C5	Common for SSR output relay 5 Maximum current: 0.5 A
			DO1	SSR output 1
			DO2…DO4	SPST output relays 2...4, page 78

Related Device	Connector		Label	Description
			DO5	SSR output 5
TM173OFM22S	-	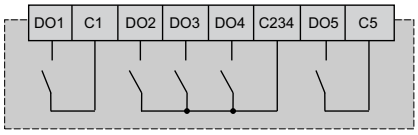	C1	Common for SSR output relay 1 Maximum current: 0.5 A
			C234	Common for SPST output relays 2...4, page 78
			C5	Common for SSR output relay 5 Maximum current: 0.5 A
			DO1	SSR output 1
			DO2…DO4	SPST output relays 2...4, page 78
			DO5	SSR output 5

Analog Input

Overview

Controllers analog inputs are identified as AI1…AI*x*.

The inputs are configurable in pairs, AI1- AI2 is the first pair, AI3-AI4 is the second pair, and so on, up to the last pair. Both AIs of a pair must be configured in order to belong to the same type group.

Using the parameter *Cfg_Aix*, an analog input AI*x* can be configured to acquire a signal by a physical resource (probe, digital input, voltage/current signal) as specified in the following table:

Type group	*Cfg_Aix*	Description
NTC resistive input or Digital input	0	NTC (NK103), 10 kΩ at 25 °C, BETA value 3977
	1	Digital input
	2	NTC (103AT-2), 10 kΩ at 25 °C, BETA value 3435
	7	hΩ (NTC)(1)
Current input	3	4…20 mA
	11	0…20 mA
Voltage input 0…10 Vdc	4	0…10 Vdc
Voltage input 0…5 Vdc	5	0…5 Vdc Ratiometric
	10	0…5 Vdc
Resistive input	6	Pt1000
	8	daΩ (Pt1000)(2)
	9	PTC (KTY81-121)

(1) Resistance value read, expressed in 0.1 kΩ, for a resistance applied to the input using the controller in NTC configuration, for example creating a divider with pull-up resistance of 10 kΩ. The resistance range for the hΩ(NTC) configuration is up to 150 kΩ.
(2) Resistance value read, expressed in 0.01 kΩ, for a resistance applied to the input using the controller in Pt1000 configuration, that is, creating a divider with pull-up resistance (2 kΩ). The resistance range for the daΩ (Pt1000) configuration is up to 3 kΩ.

The analog inputs configured as digital inputs are not isolated.

NOTICE

INOPERABLE EQUIPMENT

Only use voltage free type inputs on analog inputs configured as digital inputs.

Failure to follow these instructions can result in equipment damage.

Compatibility in Pairs

Parameters by pair:

Pairs	Parameter Set	
Pair #1	*Cfg_Ai1*	*Cfg_Ai2*
Pair #2	*Cfg_Ai3*	*Cfg_Ai4*
Pair #3	*Cfg_Ai5*	*Cfg_Ai6*

Compatibility table for a pair of AIs:

Example for pair #1			*Cfg_Ai1*											
			0	1	2	3	4	5	6	7	8	9	10	11
			NTC (NK103)	Digital input	NTC (103AT-2)	4…20 mA	0…10 Vdc	0…5 Vdc Ratiometric	Pt1000	hΩ (NTC)	daΩ (Pt1000)	PTC (KTY81-121)	0…5 Vdc	0…20 mA
Cfg_Ai2	0	NTC (NK103)	✓	✓	✓	-	-	-	-	✓	-	-	-	-
	1	Digital input	✓	✓	✓	-	-	-	-	✓	-	-	-	-
	2	NTC (103AT-2)	✓	✓	✓	-	-	-	-	✓	-	-	-	-
	3	4…20 mA	-	-	-	✓	-	-	-	-	-	-	-	✓
	4	0…10 Vdc	-	-	-	-	✓	-	-	-	-	-	-	-
	5	0…5 Vdc Ratiometric	-	-	-	-	-	✓	-	-	-	-	✓	-
	6	Pt1000	-	-	-	-	-	-	✓	-	✓	✓	-	-
	7	hΩ (NTC)	✓	✓	✓	-	-	-	-	✓	-	-	-	-
	8	daΩ (Pt1000)	-	-	-	-	-	-	✓	-	✓	✓	-	-
	9	PTC (KTY81-121)	-	-	-	-	-	-	✓	-	✓	✓	-	-
	10	0…5 Vdc	-	-	-	-	-	✓	-	-	-	-	✓	-
	11	0…20 mA	-	-	-	✓	-	-	-	-	-	-	-	✓

Applying not allowed configuration produces the error number 8003_h on the field value of both probes (unsigned decimal: 32771 / signed decimal: -32765).

Voltage Analog Inputs or Current Analog Inputs Configuration

According to the physical resources wired (voltage signal or current signal), inputs must be configured using the related parameters.

Analog inputs type can be configured as specified in the following table:

Parameter	Description	Range	Default value
FullScaleMin_AIx	Analog input AI*x* start of scale value	-9999…+9999	0
FullScaleMax_AIx	Analog input AI*x* full scale value	-9999…+9999	1000
Calibration_AIx	Analog input AI*x* differential	-1000…+1000	0

Note:

Type of probe configured	Minimum full scale AI*x*	Maximum full scale AI*x*
0/4…20 mA current probe	0/4 mA	20 mA
0…10 Vdc voltage probe	0 Vdc	10 Vdc
0…5 Vdc ratiometric probe	10 % (0.5 Vdc)	90 % (4.5 Vdc)
0…5 Vdc probe	0 Vdc	5 Vdc

For details on the values and characteristics of parameters, refer to the Parameters, page 110.

Voltage Analog Input

Characteristics

Using the parameter *Cfg_Aix*, an analog input AI*x* can be configured to acquire a signal by a physical resource (probe, digital input, voltage/current signal) as specified in the following table:

Cfg_Aix	Description	Range	Accuracy Range	Resolution	Input Impedance
4	0…10 Vdc	-9999…9999 Default: 0…1000	0…10 Vdc +/-1 % full range + 1 digit	1 digit	>10 kΩ TM173O••••••
					>20 kΩ TM173O••••••
10	0…5 Vdc	-9999…9999 Default: 0…1000	0…5 Vdc +/-1 % full range + 1 digit	1 digit	>20 kΩ TM173O••••••
					>60 kΩ TM172E••R
5	0…5 Vdc Ratiometric	-9999…9999 Default: 0…1000	10 % 5 Vdc…90 % 5 Vdc +/-1 % full range + 1 digit	1 digit	>20 kΩ TM173O••••••
					>60 kΩ TM172E••R

Wiring Diagram Example

TM173O•••••• (CN10) voltage analog input connection:

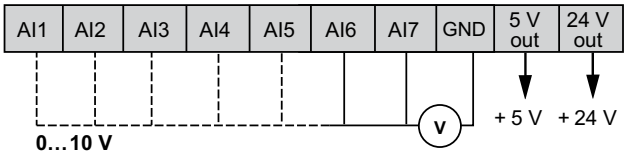

TM173O•••••• (CN10) 0-5V ratiometric voltage input connection:

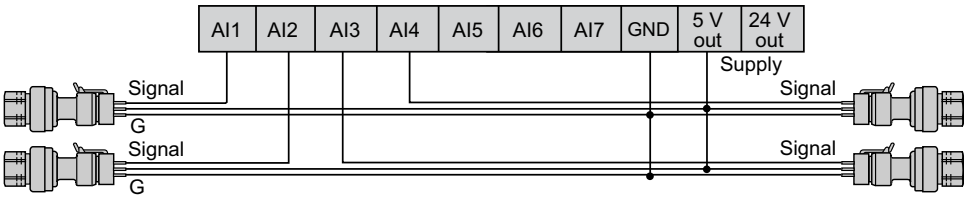

Pitch of the terminal block
2.50 mm (0.098 in)

For more information about the wiring, refer to Wiring Best Practices, page 29.

Current Analog Input

Characteristics

Using the parameter *Cfg_Aix*, an analog input AI*x* can be configured to acquire a signal by a physical resource (probe, digital input, voltage/current signal) as specified in the following table:

Cfg_Aix	Description	Range	Accuracy Range	Resolution	Input Impedance
3	4…20 mA	-9999…9999 Default: 0…1000	4…20 mA +/-1 % full range + 1 digit	1 digit	<150 Ω
11	0…20 mA		0…4 mA +/-2 % full range + 1 digit		
			4…20 mA +/-1 % full range + 1 digit		

Wiring Diagram Example

TM173O•••••• (CN10) current analog input connection:

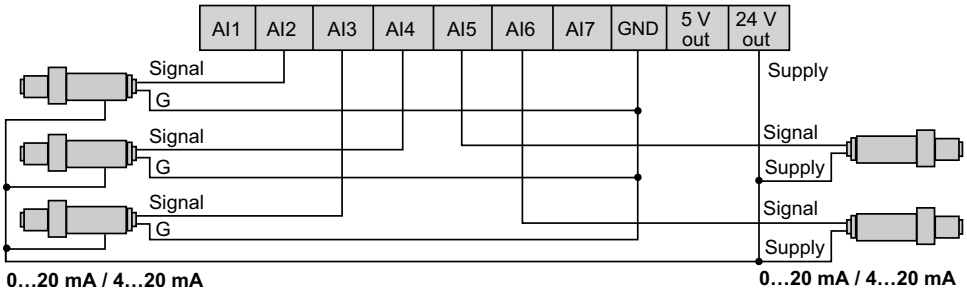

You can power the transducer from the M173O (5 Vdc or 24 Vdc) or with an external supply.

For more information, refer to transducer technical data sheet.

Pitch of the terminal block
2.50 mm (0.098 in)

For more information about the wiring, refer to Wiring Best Practices, page 29.

NTC Analog Input

Characteristics

Using the parameter *Cfg_Aix*, an analog input AI*x* can be configured to acquire a signal by a physical resource (probe, digital input, voltage/current signal) as specified in the following table:

Cfg_Aix	Description	Accuracy Range	Accuracy	Resolution	Input Impedance
0	NTC (NK103) 10 kΩ at 25 °C BETA value 3977	-40…+137 °C (-40…+278.6 °F)			
		-40…+110 °C (-40…+230 °F)	+/-1 °C (+/-1.8 °F)	0.1 °C (0.18 °F)	10 kΩ
		+110…+137 °C (+230…+278.6 °F)	+/-1.9 °C (+/-3.42 °F)		
2	NTC (103AT-2) 10 kΩ at 25 °C BETA value 3435	-50…+110 °C (-58…+230 °F)	+/-1 °C (+/-1.8 °F)	0.1 °C (0.18 °F)	10 kΩ
7	hΩ (NTC)	0…150 kΩ			
	TM173O••••••	0…75 kΩ	+/-0.85 kΩ	0.1 kΩ	10 kΩ
		75…150 kΩ	+/-2.4 kΩ		
	TM172E••R	0…70 kΩ	+/-1 kΩ		
		70…120 kΩ	+/-2.5 kΩ		
		120…150 kΩ	+/-6 kΩ		

Wiring Diagram Example

TM173O•••••• (CN10) NTC input connection:

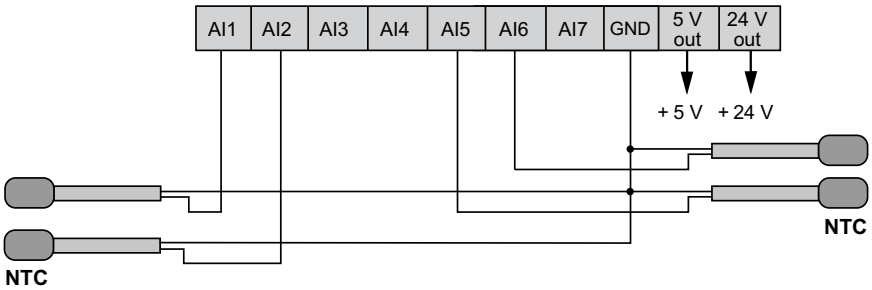

Pitch of the terminal block
2.50 mm (0.098 in)

For more information about the wiring, refer to Wiring Best Practices, page 29.

Resistive Analog Input (PTC/Pt1000)

Characteristics

Using the parameter *Cfg_Aix*, an analog input AI*x* can be configured to acquire a signal by a physical resource (probe, digital input, voltage/current signal) as specified in the following table:

Cfg_Aix	Description		Accuracy Range	Accuracy	Resolution	Input Impedance
6	Pt1000		-100…+400 °C (-148…+752 °F)			
		TM173O••••••	-100…0 °C (-148…-32 °F)	+/-1.3 °C (+/-2.34 °F)	0.1 °C (+/-0.18 °F)	2 kΩ
			0…+80 °C (-32…+176 °F)	+/-1.65 °C (+/-2.97 °F)		
			+80…+150 °C (+176…+302 °F)	+/-2 °C (+/-3.6 °F)		
			+150…+450 °C (+302…+842 °F)	+/-1.8 °C (+/-3.24 °F)		
	Pt1000		-200…+850 °C (-328…+1562 °F)			
		TM172E••R	-200…-100 °C (-328…-148 °F)	+/-5 °C (+/-9 °F)	0.1 °C (+/-0.18 °F)	2 kΩ
			-100…-50 °C (-148…-58 °F)	+/-3 °C (+/-5.4 °F)		
			-50…+200 °C (-58…+392 °F)	+/-1.5 °C (+/-2.7 °F)		
			+200…+600 °C (+392…+1112 °F)	+/-15 °C (+/-27 °F)		
			+600…+850 °C (+1112…+1562 °F)	+/-30 °C (+/-54 °F)		
8	daΩ (Pt1000)		0…3 kΩ	+/-25 Ω	10 Ω	2 kΩ
9	PTC (KTY81-121)		-55…+150 °C (-67…+302 °F)			
		TM173O••••••	-55…+150 °C (-67…+302 °F)	+/-1.1 °C (+/-1.98 °F)	0.1 °C (0.18 °F)	2 kΩ
		TM172E••R	-55…+135 °C (-67…+275 °F)	+/-1.1 °C (+/-1.98 °F)	0.1 °C (0.18 °F)	2 kΩ
			+135…+150 °C (+275…+302 °F)	+/-3.1 °C (+/-5.58 °F)		

Wiring Diagram Example

TM173O•••••• (CN10) PTC/Pt1000 inputs connection:

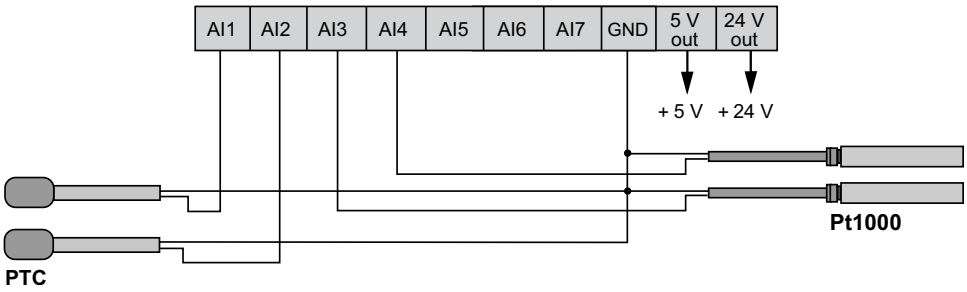

Pitch of the terminal block
2.50 mm (0.098 in)

For more information about the wiring, refer to Wiring Best Practices, page 29.

Analog Input Used as Digital Input

Characteristics

Using the parameter *Cfg_Aix*, an analog input AI*x* can be configured to acquire a signal by a physical resource (probe, digital input, voltage/current signal) as specified in the following table:

Cfg_Aix	Description	Range	Accuracy Range	Accuracy	Resolution	Input Impedance
1	Digital input	-	-	-	-	10 kΩ

The use of an external power supply with the dry contact digital inputs can result in equipment damage.

NOTICE

INOPERABLE EQUIPMENT

Do not apply external power supply to the dry contact digital inputs of the device.

Failure to follow these instructions can result in equipment damage.

Wiring Diagram Example

TM173O•••••• (CN10) analog input used as digital input connection:

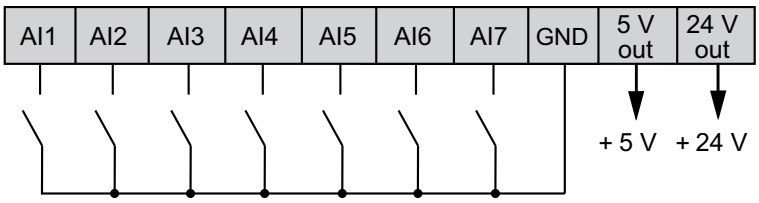

Pitch of the terminal block
2.50 mm (0.098 in)

For more information about the wiring, refer to Wiring Best Practices, page 29.

Analog Output

PWM Open Collector Outputs

Characteristics

PWM open collector (configurable polarity) configurable analog output characteristics. :

Analog output		• Frequency • Duty cycle			Maximum Sink Current	Maximum Supplies Voltage
		Range	Accuracy	Resolution		
AO2, AO3, AO4		• 0…2000 Hz • 0.0…100.0 %	• 1 Hz • 0.1 %	• 1 Hz • 0.1 %	50 mA	24 Vdc
	TM173O••••••					

Analog outputs in PWM mode can be configured as specified in the following table:

Parameter	Description	Range
PWM_frequency_AO2	PWM Frequency	0…2000 Hz
PWM_frequency_AO3		
PWM_frequency_AO4		
PWM_polarity_AO2	PWM Polarity • 0 = Reversed • 1 = Direct	0, 1
PWM_polarity_AO3		
PWM_polarity_AO4		

NOTE: The polarity and the frequency are common for the 2 configurable analog outputs of each device.

For details on the values and characteristics of the parameters, refer to Parameters, page 111.

Wiring Diagram Example

TM173O•••••• (CN8) open collector PWM analog output (AO3) connection:

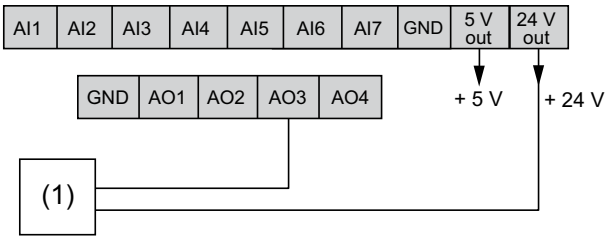

(1) Third-party actuator (for example: fan module) or external relay

Pitch of the terminal block
2.50 mm (0.098 in)

For more information about the wiring, refer to Wiring Best Practices, page 29.

Low Voltage (SELV) Analog Outputs

Characteristics

Voltage modulation 0…10 Vdc configurable analog output characteristics:

Analog output	Range	Sink/Source	Accuracy	Resolution	Load Impedance
AO1, AO2	0…1000	Source	+/-2 % full scale	1 digit	≥700 Ω
TM173O•••••• TM172E28R					
AO3, AO4					
TM173O••••••					

Wiring Diagram Example

TM173O•••••• (CN8) Low voltage (SELV) analog outputs (AO2, AO3 and AO4) connection:

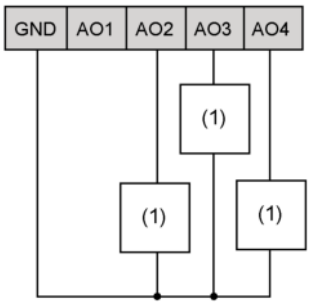

(1) Third-party actuator (for example: fan module)

Pitch of the terminal block
2.50 mm (0.098 in)

For more information about the wiring, refer to Wiring Best Practices, page 29.

Analog Current Output

Characteristics

Current modulation 4…20 mA configurable analog output characteristics:

Analog output	Range	Accuracy	Resolution	Load Impedance
AO1	0…1000	+/-2 % full scale	1 digit	≤450 Ω
TM173O•••••• TM172E28R				
AO2				
TM172E28R				

Wiring Diagram Example

TM173O•••••• (CN8) current analog output (AO1) connection:

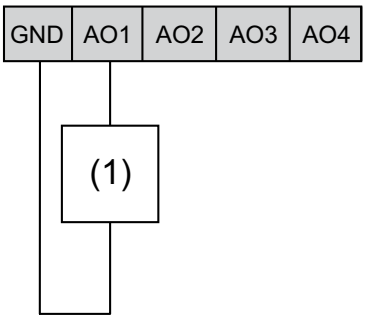

(1) Third-party actuator (for example: fan module)

Pitch of the terminal block
2.50 mm (0.098 in)

For more information about the wiring, refer to Wiring Best Practices, page 29.

Valve Output

Overview

Each TM173ODEM22R controller is equipped with one valve driver output.

Characteristics

The table indicates the Valve outputs characteristics:

Labels	Characteristic	Value
VMOT	Maximum voltage	12 Vdc
	Maximum current	400 mA
W•±	Maximum current	200 mA
-	Built-in protection	Against overload & short-circuit (current off)

Wiring Diagram Example

TM173ODEM22R valve output:

W1+	W1-	W2+	W2-	VMOT	VMOT

Pitch of the terminal block	Cabling length
2.50 mm (0.098 in)	1000 m (3280.83 ft)

For more information about the wiring, refer to Wiring Best Practices, page 29.

Related Devices and Connectors

The table indicates the related devices and connectors

Related Device	Connector		Label	Description
TM173ODEM22R	CN5	W1+ W1- W2+ W2- VMOT VMOT	VMOT	Common
			VMOT	Common
			W1+	W1 terminals for connection to valve first coil winding.
			W1-	
			W2+	W2 terminals for connection to valve second coil winding.
			W2-	

Wiring Description for various common valves

Refer to Wiring Description for unipolar common valves (see Modicon M172 Electronic Expansion Valve Driver, Preconfigured Valves Parameters Guide).

⚠ WARNING

UNINTENDED EQUIPMENT OPERATION

Before wiring valve, verify the wiring in the valve manufacturer Technical Data.

Failure to follow these instructions can result in death, serious injury, or equipment damage.

Communication

CAN Expansion Bus Port

Overview

The TM173O•••••• controllers and TM172E••R expansion modules can be connected through the CAN expansion bus.

Connector

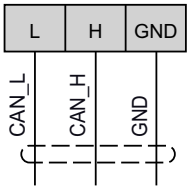

Pitch of the terminal block
2.50 mm (0.098 in)

For more information about the wiring, refer to Wiring Best Practices, page 29.

Wiring

Use a twisted pair shielded cable with two conductors with section 0.5 mm² (AWG 20), plus a sheath (characteristic impedance 120 Ω) with PVC sleeve, nominal capacity between conductors 36 pF/m, nominal capacity between conductor and shield 68 pF/m.

For laying wires, comply with the indications given in standard EN 50174 on information technology wiring. Extra care must be taken in separating data transmission circuits from power lines.

The network must have a bus daisy chain topology and must have 120 Ω 1/4 W termination resistances between the CAN_H and CAN_L terminals on each of the two ends of the bus or enable those embedded on the expansion modules.

The maximum cable length depends on the communication speed set in baud:

Baud rate	**Maximum network length using:**
	Embedded CAN
50 kBd	1000 m (3280.83 ft)
125 kBd	500 m (1640.41 ft)
250 kBd	200 m (656.17 ft)
500 kBd	30 m (98.42 ft)

NOTICE

INOPERABLE EQUIPMENT

- Do not connect equipment that communicate using RS-485 serial to CAN Expansion Bus terminals.
- Do not connect equipment that communicate using CAN Expansion Bus to RS-485 terminals.

Failure to follow these instructions can result in equipment damage.

The signal reference for CAN Expansion Bus (indicated as GND) and the negative terminal of power supply connection are not internally connected.

TM172E••R Port Configuration Using DIP Switch

The 6-position DIP switches on expansion modules is used to:

- Assert the 120 Ω termination (1)
- Set the CAN baud rate (2)
- Set the CAN address (3)

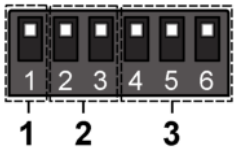

NOTE: The addressing comprises the sum of parameter *Addr_CAN_OB* (Default value: 1) plus the composite value of the 6-position DIP switches DIP4…DIP6 (8 addresses).

DIP number	**1**	**2**	**3**	**4**	**5**	**6**
	120 Ω	**Baud**		**Address**		
Disabled Default value		-				
Enabled						
500 kBd Default value	-			-		
250 kBd						

DIP number	1	2	3	4	5	6
	120 Ω	Baud		Address		
125 kBd						
50 kBd						
Address *Addr_CAN_OB* Default value	-					
Address *Addr_CAN_OB* + 1						
Address *Addr_CAN_OB* + 2						
Address *Addr_CAN_OB* + 3						
Address *Addr_CAN_OB* + 4						
Address *Addr_CAN_OB* + 5						
Address *Addr_CAN_OB* + 6						
Address *Addr_CAN_OB* + 7						

CAN Expansion Bus (Field) Network Connection Example

A CAN Expansion Bus (Field) network connection can be constituted by:

- Maximum 1 TM173O•••••• functioning as server.

Isolated power supply connection example using a TM173ODM22R:

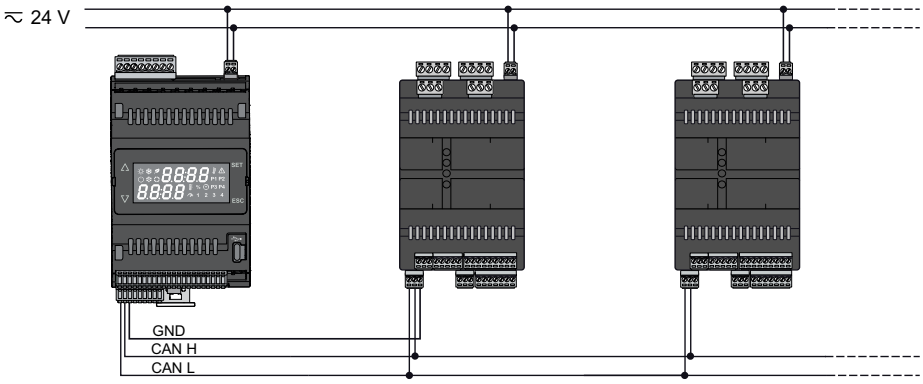

RS-485 Serial Ports

Overview

Each M173O controller is equipped with 2 RS-485 serial ports.

These ports permit user to communicate between the controller and a device via:

- A Modbus RTU connection when using **RS-485-1** (slave) or **RS-485-2** (master or slave) communication port

Connector of M173O Controllers

The M173O controllers are equipped with 2 RS-485 terminals:

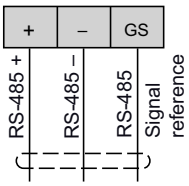

NOTE: GS of the **RS-485-1** and **RS-485-2** terminals are internally connected and are isolated from the GND of the device.

Cables

Use a shielded and "twisted pair" cable with two 0.5 mm^2 section conductors (AWG 20), plus braid (characteristic impedance 120 Ω) with PVC sleeve, nominal capacity between conductors 36 pF/m, nominal capacity between conductor and shielding 68 pF/m.

Alternatively use a shielded and "twisted pair" cable with two 0.5 mm^2 section conductors (AWG 20), plus braid with PVC sleeve, nominal capacity between conductors 89 pF/m, nominal capacity between conductor and shielding 161 pF/m. See EN 50174 standard on IT cabling for indications on how cables must be routed.

Always follow regulations applicable to the routing and connection of cables. Separate data transmission circuits from power lines.

RS-485 network up to 1200 m in length with a maximum of 32 devices can be connected directly to the controller.This length can be extended and the number of devices for each channel increased using appropriate repeater modules.

Single terminal strip with 3 conductors: use the 3 conductors (“+”, “-“ for the signal and “GND” for the braid).

Attach the 120 Ω 1/4 W resistors between the "+" and "-" terminals of the interface and the last controller in each branch of the network.

Maximum settable speed 115200 baud.

RS-485 physical layer can be used for Modbus SL. Concurrent communication of different protocols on the same serial port is not allowed.

NOTICE

INOPERABLE EQUIPMENT

- Do not connect equipment that communicate using RS-485 serial to CAN Expansion Bus terminals.
- Do not connect equipment that communicate using CAN Expansion Bus to RS-485 terminals.

Failure to follow these instructions can result in equipment damage.

Wiring Examples

The following diagram shows an RS-485 (field) architecture wiring example with isolated controllers:

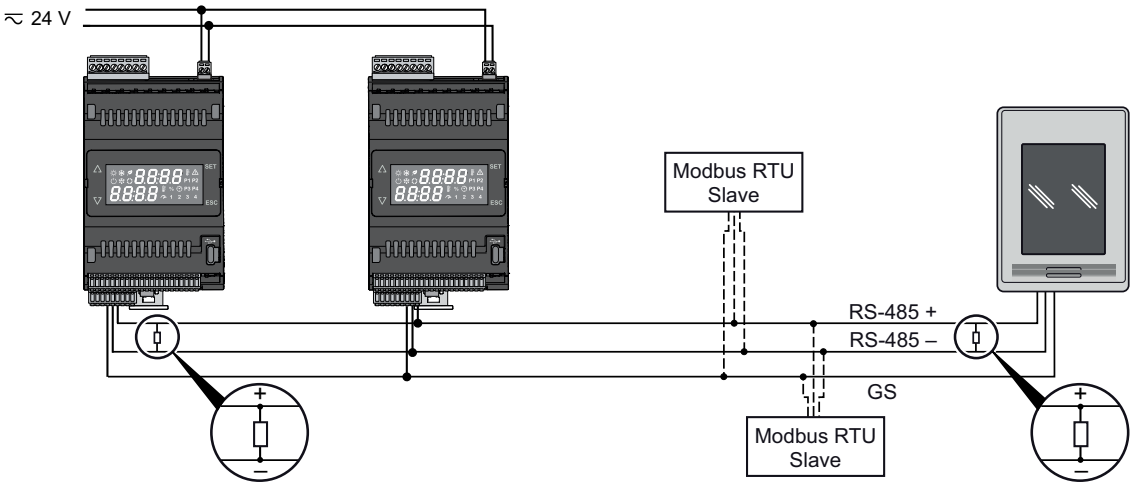

Characteristic	Definition
Type of trunk cable	Shielded cable with one twisted pair and at least a third conductor
Maximum length of bus	1000 m (3280.83 ft) at 19200 bps with a shielded and twisted cable (for example: TSXCSA•••)
Maximum number of devices (without repeater)	32 devices that are 31 slaves
Line terminators	120 Ω 1/4 W resistors

Pitch of the terminal block	Cabling length
2.50 mm (0.098 in)	1000 m (3280.83 ft)

For more information about the wiring, refer to Wiring Best Practices, page 29.

USB Serial Port

Overview

An USB (Type C) connector, placed on the front view of the controller, is used to connect the controller to a PC via USB (Type C) cable for debugging, commissioning, downloading, uploading with EcoStruxure Machine Expert - HVAC, datalogging*.

* datalogging function is available starting from version 1.8 of EcoStruxure Machine Expert - HVAC.

Connector of TM173O•••••• Controllers

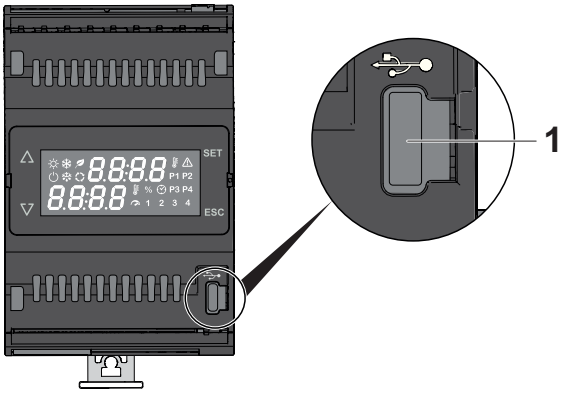

1 USB (Type C)

Cabling length
2 m (6.6 ft)

Example of connection between controller and USB (Type C) pen drive:

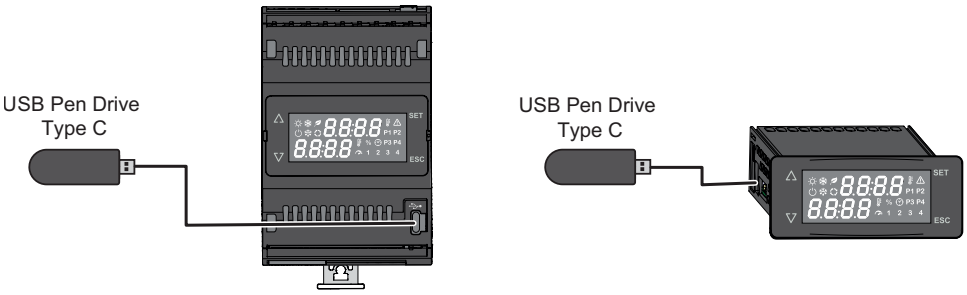

Connection

The cable required for TM173O•••••• controllers is USB (Type C).

For more information, see the EcoStruxure Machine Expert - HVAC, Programming Guide.

NOTE: You must apply voltage via 24 Vac/dc while the equipment is already connected to a PC via USB (Type C) cable.

Before applying power via 24 Vac/dc power supply connection:

Step	Action
1	Disconnect the USB (Type C) cable.
2	Supply the TM173O••••• / TM173ODEM22R controller via its 24 Vac/dc supply. Supply the TM173O•••••H controller via its 100...240 Vac supply.
3	Reconnect the USB (Type C) cable.

Compatibility

TM173O•••••• controller is seen as a virtual COM. Serial communication is performed with a CDC profile (USB standard).

Following operating systems are compatible:

- Windows 10 64 bit
- Windows 11 64 bit

The driver is supplied with the EcoStruxure Machine Expert - HVAC.

Connector to communication module

Overview

TM173OB••••/TM173OD•••• / TM173ODEM22R / TM173O•••••H controllers are equipped with a connector to communication module.

Description

The connector to communication module allows to connect the controller to the Secure Interface WiFi.

Battery Backup Port

Overview

Each TM173ODEM22R controller is equipped with one battery backup port.

This socket connector allows connection between TM173ODEM22R and TM172EVEVBAT battery backup module.

In case of TM173ODEM22R power supply outage, a TM172EVEVBAT battery backup allows the valve driver to close one valve.

Connection

For more details about installation, refer to the TM172EVEVBAT battery backup installation, page 43.

Commissioning

Once installed, you have to indicate the number of installed battery backup modules on your TM173ODEM22R controller. To do this, you must update the value of the parameter n36, page 124.

⚠⚠ DANGER

HAZARD OF ELECTRIC SHOCK OR ARC FLASH

Do not short-circuit the connector pins.

Failure to follow these instructions will result in death or serious injury.

Memory

Memory

Memory Characteristics

The M173O has the following memory capacities:

Characteristic	Value
Memory for application code and user interface code	1 MB
RAM memory (automatic mapping)	378 kB
RAM memory (Modbus mapping)	10 kB
Parameters (Modbus mapping Flash memory)	10 kB
Retain Flash area (power-off retention)	384 Bytes
sysRetainPars area (Flash memory)	7808 Bytes

This area is used to save retain data only at device power off.

This larger Flash-managed area is used for retain variables stored during runtime.

Following the system's periodic check and delayed-write mechanism.

Excessive write operations can be problematic, when working with retain variables such as counters or operating hours. It is recommended to confine frequent or recursive writing operations to the retain variables area to prevent data loss.

The total number of write operations in parameters and retain variables area should not exceed 100k per area.

PLC programming should not exceed 10k cycles.

Each Flash memory page can withstand up to 100,000 writing cycles (10K for PLC) without being damaged.

⚠ CAUTION

FLASH MEMORY DAMAGE DUE TO EXCESSIVE OVERWRITING OPERATIONS

Avoid programming the device with frequent or recursive writing operations of parameters that may exceed 100,000 writing cycles, as it can lead to data loss.

Failure to follow these instructions can result in injury or equipment damage.

In order to reduce the frequency of Flash memory writes, parameters are stored in the Flash memory according to the following criteria:

- Parameters are saved into Flash memory after a delay of 0.5 seconds since a change in value.
- If additional value changes occur within 0.5 seconds since the first change, parameters are stored again after a 0.5-second interval from the most recent change.

Regarding the retain area, it is saved into Flash memory to account for variations. The system performs regular checks every second, except when a variation occurs. In such cases, the check is postponed and performed after a 5-second interval.

RTC (Real Time Clock)

RTC (Real Time Clock)

RTC Description

The table indicates the functions of the RTC:

Function	Description
Backup type	Super capacitor
RTC data retention time in the event of a power outage	3 days
Drift value	≤ 30 s/month at 25 °C (77 °F)

Remote Display

What's in This Part

Environmental Characteristics 101
Device Description 102

Environmental Characteristics

What's in This Chapter

Environmental Characteristics 101

Environmental Characteristics

Remote Display Specifications

Characteristics	Specification
The product complies with the following harmonized Standards	EN 60730-2-6 / EN 60730-2-9
Construction of control	Electronic automatic Incorporated Control
Purpose of control	Remote display for M173O controller
Mounting	Panel
Type of action	1.B
Pollution class	2 (normal)
Over-voltage category	II
Nominal pulse voltage	2500 V
Digital outputs	Refer to the label on the device
Ambient operating temperature	-20…65 °C (-4…149 °F)
Ambient operating humidity (non-condensing)	5…95 %
Ambient storage temperature	-30…70 °C (-22…158 °F)
Ambient storage humidity (non-condensing)	5…95 %
Power supply	12 Vdc (powered by the controller)
Power consumption	0.5 W max
Software class	A
Degree of protection by enclosure	IP65(1)

(1) Front panel only (tested in accordance with EN 60529 with a steel sheet 2 mm (0.08 in.) thick ±10%).

Device Description

What's in This Chapter

TM173DLED 102

TM173DLED

Physical Description

The following illustrations present a TM173DLED remote display:

Front view

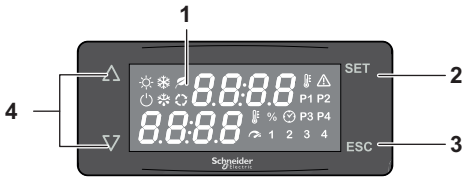

Rear view

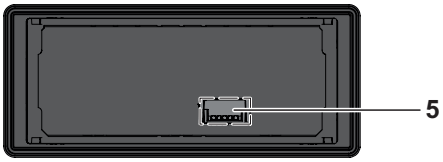

Number	Description	
1	Display area	User interface, page 104
2	**SET** key	
3	**ESC** key	
4	**UP** and **DOWN** keys	
5	Connector for controller	

Dimensions

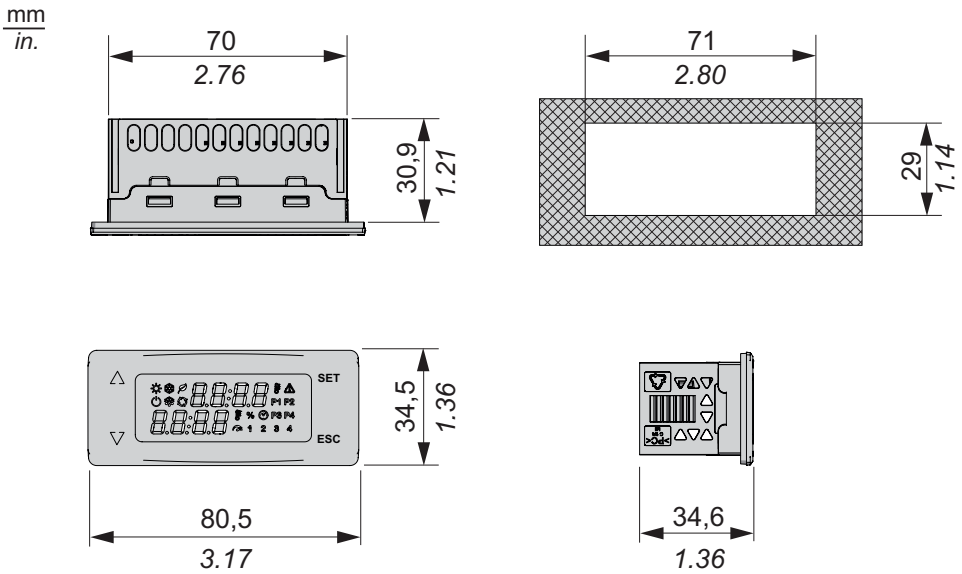

User Interface

What's in This Part

Displays and Icons Description..... 104

Displays and Icons Description

What's in This Chapter

TM173OD•••• / TM173OF•••• / TM173ODEM22R / TM173ODM22SH / TM173ODM22RH / TM173DLED User Interface 104
TM172E••R Expansion Modules User Interface 108

TM173OD•••• / TM173OF•••• / TM173ODEM22R / TM173ODM22SH / TM173ODM22RH / TM173DLED User Interface

Overview

The user interface of the TM173OD•••• / TM173OF•••• / TM173ODEM22R / TM173ODM22SH / TM173ODM22RH controllers have the same functionalities. The TM173DLED is used to perform all operations relating to the connected controller.

TM173OD••••	TM173OF•••• / TM173DLED
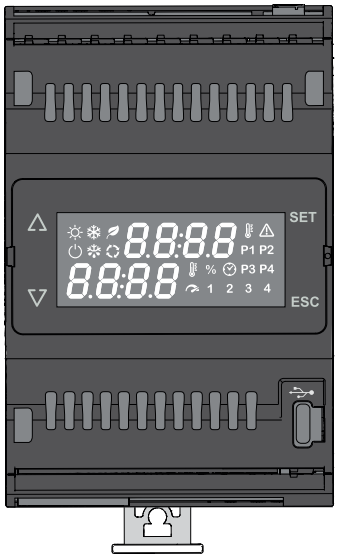	

The TM173OB•••• / TM173OBM22RH controllers do not have a user interface.

To operate these devices, use a remote display TM173DLED.

Keys

⚠ WARNING

UNINTENDED EQUIPMENT OPERATION

Install and operate this equipment according to the conditions described in the Environmental Characteristics

Failure to follow these instructions can result in death, serious injury, or equipment damage.

The following indications refer to the TM173OD•••• / TM173OF•••• / TM173ODEM22R / TM173ODM22SH / TM173ODM22RH / TM173DLED user interface.

Description of keys actions

Key	Press once (press and release)	Long press (press and hold for 3 seconds)(1)
UP	• Increase a value • Go to next label	Function F1
DOWN	• Decrease a value • Go to previous label	Function F3
ESC (escape)	• Exit without saving modified settings • Go back to previous level	Function F2
SET	• Confirm value / exit and save modified settings • Move to next level (open folder, subfolder, parameter, value) • Open state menu	Function F4
[**UP** + **DOWN**]	From the main menu, switch from the BIOS menu to the main display of the IEC Application menu (if present).	-
[**DOWN** + **SET**]	Press to unlock keys for UI31. **NOTE:** UI30 > 0 will lock the keys. **NOTE:** If this equipment is installed in critical humidity conditions it is recommended to lock the keys.	-
[**SET**+**ESC**]	Open programming menu	-
(1) The long press duration is configurable.		

NOTE: Actions made by the F1…F4 functions depend on the application.

LEDs and Display

All icons must be managed (turned ON, OFF, or flashing) by changing value of the corresponding `sysIcons` array variable inside M173O application.

The `sysIcons[x]` can have the following values:

- 0: icon is OFF
- 1: icon is ON
- 2: icon is flashing
- 3: icon is fast flashing

The display has 3 categories of icons:

- States and Operating Modes
- Units of Measure
- Utilities

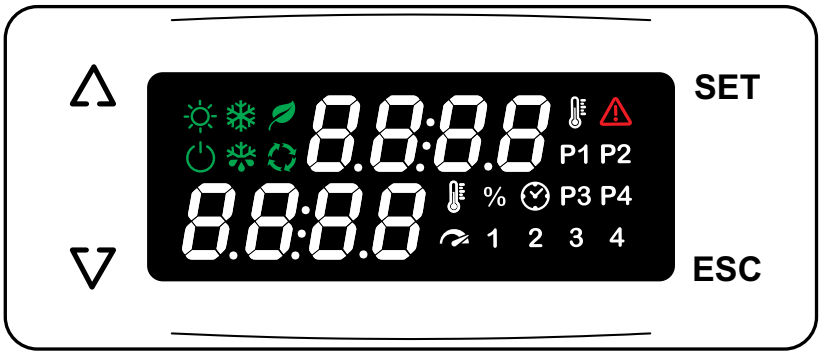

LEDs description	Icons	Description	Variable to use
LED states and Operating Modes:		Alarm	`sysIcons[16]`
		Heating	`sysIcons[8]`
		Cooling	`sysIcons[6]`
		Standby	`sysIcons[4]`
		Defrost	`sysIcons[2]`
		Economy	`sysIcons[19]`
		Edit mode	`sysIcons[18]`
LED Unit of measure: 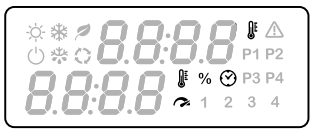		Time	
		Temperature	`sysIcons[5]`
		Pressure	`sysIcons[3]`
	%	Relative humidity% or % of analog output	`sysIcons[1]`
LED utilities:	**P1**	Function 1	`sysIcons[9]`...`sysIcons[15]`
	P2	Function 2	
	P3	Function 3	
	P4	Function 4	
	1	Utility	
	2	Utility	
	3	Utility	
	4	Utility	

NOTE: `sysIcons[16]` is dedicated to the column of the numerical value displayed.

This timing diagram shows the difference between the fast flash, regular flash and single flash:

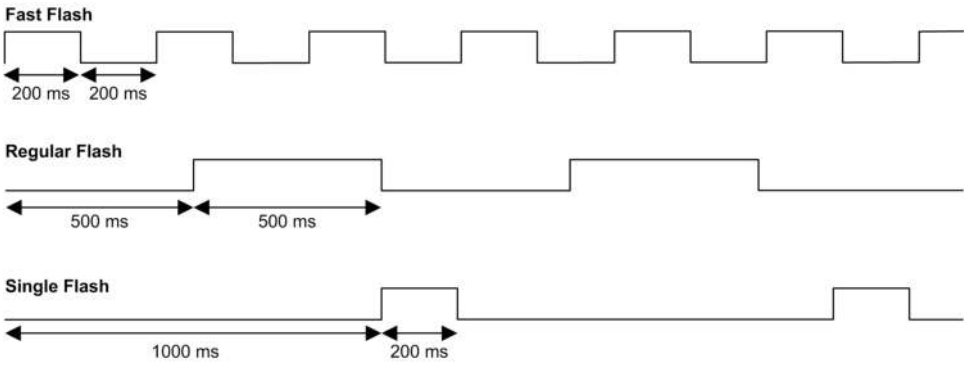

USB and UPDATE LED

The TM173OB••••/TM173OD•••• / TM173ODEM22R / TM173O•••••H controllers have an advanced LED:

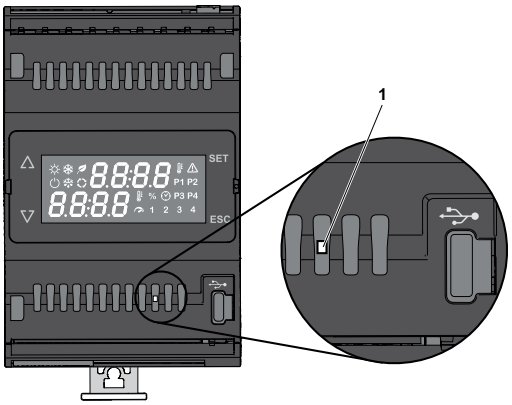

This table shows the LED state with USB connected to the controller:

LED State	Description
OFF	USB not connected or file procedure ended with error.
ON	USB connected and file procedure completed correctly.
Duty 50% flashing period 100 ms	USB connected and recognized but no procedure in progress.
Duty 50% flashing period 1 s	USB connected and file procedure in progress.

This table shows the LED state during UPDATE controller, with USB not connected to the controller:

LED State	Description
Duty 20% on 80% off flashing period 2 s	UPDATE in progress.
Duty 50% flashing period 100 ms	UPDATE error or watchdog occurred.
Duty 50% flashing period 1 s	UPDATE completed correctly, waiting for reboot to apply.

TM172E••R Expansion Modules User Interface

User Interface

The TM172E••R expansion modules have an advanced LED:

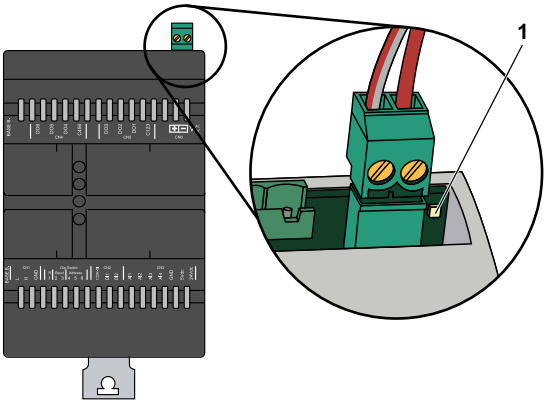

1: TM172E••R Expansion Module status LED.

LED State	Description
OFF	There is no power or the device CPU is not working
ON	The TM172E••R Expansion Module is powered and device CPU is running.
Flashing	The TM172E••R Expansion Module is powered and Operational. In this state, the transmission of process data via process data objects (PDOs) is possible.
Fast flashing	During a firmware upgrade. **NOTE:** At power-on/reset, the LED first flashing for a while and then stay ON.

Parameters

What's in This Part

Parameters 110

Parameters

What's in This Chapter

Overview 110
Controller Parameter Table 111

Overview

Overview

Parameters are used to configure a Modicon M173 Optimized Logic Controller.

They can be modified with:

- Keys on:
  - M173O front panel
- PC with EcoStruxure Machine Expert - HVAC
- Modbus SL communication
- File on USB pen drive

⚠ WARNING

UNINTENDED EQUIPMENT OPERATION

After any BIOS parameter modification, power cycle the device.

Failure to follow these instructions can result in death, serious injury, or equipment damage.

Modbus Commands and Data Areas

The following commands are implemented:

Modbus command	Description
3 (3_h)	Read multiple registers on Client side
1 (1_h), 2 (2_h), 4 (4_h), 5 (5_h), 6 (6_h), 15 (F_h)	Write single register on Client side
16 (10_h)	Write multiple registers on Client side
43 ($2B_h$)	Read Device Identification: • Vendor name • Product code • Major/minor revision

Parameters Tables

The following table list all information required to read, write, and decode all accessible resources in the device.

- Controller Parameter table, page 111

Description of columns:

Column	Description
LABEL	Indicates the label used to display the parameters in the device menu.
ADDRESS	Indicates the address of the Modbus register containing the resource to access.
DATA TYPE	Type of Data as indicated in EcoStruxure Machine Expert - HVAC-Installer.
CPL	When the field indicates “-1”, the value read by the register requires conversion because the value represents a number with a sign. In the other cases, the value is always positive or null. To carry out the conversion, proceed as follows: • If the value in the register is from 0 to 32767, the result is the value itself (zero and positive values). • If the value in the register is from 32768 to 65535, the result is the value of the register - 65536 (negative values).
RESET	Indicates whether the controller must be rebooted after the parameter has been modified. • Y = the controller must be rebooted to modify the parameter. • Empty "-" = the controller does not need to be rebooted to modify the parameter.
DESCRIP-TION	Description of the parameter usage.
RANGE	Describes the interval of values that can be assigned to the parameter. It can be correlated with other equipment parameters (indicated in the parameter label).
DEFAULT	Indicates the factory setting for the reference of the device.
U.M.	Indicates the unit of measurement for values converted according to the rules indicated in the CPL column. The unit of measurement shown is for example purposes only, as it may change depending on the application (for example, parameters with a U.M. in °C/bar could also have %RH.)

Controller Parameter Table

Folders

NOTE: Not all parameters listed are available depending on the accessible resources in the device.

The following tables present the controller parameters, divided into categories (folders):

Folder label
Acknowledgment, page 112
Calibration AI, page 113
Calibration AO, page 115
Analog I/O, page 116
RS485-1, page 119
RS485-2, page 120
CANopen, page 120
Display, page 123
Configuration, page 124
EEV, page 124
Miscellaneous, page 126

Acknowledgment Folder

LABEL	ADDRESS	DATA TYPE	CPL	RESET	DESCRIPTION	RANGE	DEFAULT	U.M.
Msk	8692	UDINT	-	-	CF43 Msk	0…65535	825	num
Rel	8694	UDINT	-	-	CF44 Release	0…65535	0	num
InKeyboard_Msk	8698	UDINT	-	-	CF45 Msk of internal keyboard	0…65535	829	num
InKeyboard_Rel	8700	UDINT	-	-	CF46 Release of internal keyboard	0…65535	0	num
ExtKeyboard_ Msk	8704	UDINT	-	-	CF47 Msk of external keyboard	0…65535	829	num
ExtKeyboard_Rel	8706	UDINT	-	-	CF48 Release of external keyboard	0…65535	0	num
Serial Number DW0	8710	UDINT	-	-	First Double Word	(1)	(2)	num
Serial Number DW1	8712	UDINT	-	-	Second Double Word	(1)	(2)	num
Serial Number DW2	8714	UDINT	-	-	Third Double Word	(1)	(2)	num
Serial Number DW3	8716	UDINT	-	-	Fourth Double Word	(1)	(2)	num
IntKeyboard Serial Number DW0	8718	UDINT	-	-	First Double Word - internal keyboard	(1)	(2)	num
IntKeyboard Serial Number DW1	8720	UDINT	-	-	Second Double Word - internal keyboard	(1)	(2)	num
IntKeyboard Serial Number DW2	8722	UDINT	-	-	Third Double Word - internal keyboard	(1)	(2)	num
IntKeyboard Serial Number DW3	8724	UDINT	-	-	Fourth Double Word - internal keyboard	(1)	(2)	num
ExtKeyboard Serial Number DW0	8726	UDINT	-	-	First Double Word - external keyboard	(1)	(2)	num
ExtKeyboard Serial Number DW1	8728	UDINT	-	-	Second Double Word - external keyboard	(1)	(2)	num
ExtKeyboard Serial Number DW2	8730	UDINT	-	-	Third Double Word - external keyboard	(1)	(2)	num
ExtKeyboard Serial Number DW3	8732	UDINT	-	-	Fourth Double Word - external keyboard	(1)	(2)	num
Par_TAB	15716	UINT	-	-	Tab (map code)	0…65535	0	num
Par_POLI	15717	UINT	-	-	Polycarbonate code	0…65535	1025	num

(1) 0x00000000…0xFFFFFFFF (range)

(2) 0x00000000 (default)

Calibration AI Folder

LABEL	ADDRESS	DATA TYPE	CPL	RESET	DESCRIPTION	RANGE	DEFAULT	U.M.
Gain_Ntc_AI1	15524	UINT	-	Y	NTC calibration gain AI1	0…65535	32768	num
Gain_PT1000_AI1	15525	UINT	-	Y	PT1000 calibration gain AI1	0…65535	32768	num
Gain_5Vr_AI1	15526	UINT	-	Y	0...5 Vr calibration gain AI1	0…65535	32768	num
Gain_10V_AI1	15527	UINT	-	Y	0...10 V calibration gain AI1	0…65535	32768	num
Gain_mA_AI1	15528	UINT	-	Y	4...20 mA calibration gain AI1	0…65535	32768	num
Gain_5V_AI1	15529	UINT	-	Y	0...5 V calibration gain AI1	0…65535	32768	num
Gain_PTC_AI1	15530	UINT	-	Y	PTC calibration gain AI1	0…65535	32768	num
Gain_Ntc_AI2	15531	UINT	-	Y	NTC calibration gain AI2	0…65535	32768	num
Gain_PT1000_AI2	15532	UINT	-	Y	PT1000 calibration gain AI2	0…65535	32768	num
Gain_5Vr_AI2	15533	UINT	-	Y	0...5 Vr calibration gain AI2	0…65535	32768	num
Gain_10V_AI2	15534	UINT	-	Y	0...10 V calibration gain AI2	0…65535	32768	num
Gain_mA_AI2	15535	UINT	-	Y	4...20 mA calibration gain AI2	0…65535	32768	num
Gain_5V_AI2	15536	UINT	-	Y	0...5 V calibration gain AI2	0…65535	32768	num
Gain_PTC_AI2	15537	UINT	-	Y	PTC calibration gain AI2	0…65535	32768	num
Gain_Ntc_AI3	15538	UINT	-	Y	NTC calibration gain AI3	0…65535	32768	num
Gain_PT1000_AI3	15539	UINT	-	Y	PT1000 calibration gain AI3	0…65535	32768	num
Gain_5Vr_AI3	15540	UINT	-	Y	0...5 Vr calibration gain AI3	0…65535	32768	num
Gain_10V_AI3	15541	UINT	-	Y	0...10 V calibration gain AI3	0…65535	32768	num
Gain_mA_AI3	15542	UINT	-	Y	4...20 mA calibration gain AI3	0…65535	32768	num
Gain_5V_AI3	15543	UINT	-	Y	0...5 V calibration gain AI3	0…65535	32768	num
Gain_PTC_AI3	15544	UINT	-	Y	PTC calibration gain AI3	0…65535	32768	num
Gain_Ntc_AI4	15545	UINT	-	Y	NTC calibration gain AI4	0…65535	32768	num
Gain_PT1000_AI4	15546	UINT	-	Y	PT1000 calibration gain AI4	0…65535	32768	num
Gain_5Vr_AI4	15547	UINT	-	Y	0...5 Vr calibration gain AI4	0…65535	32768	num
Gain_10V_AI4	15548	UINT	-	Y	0...10 V calibration gain AI4	0…65535	32768	num
Gain_mA_AI4	15549	UINT	-	Y	4...20 mA calibration gain AI4	0…65535	32768	num
Gain_5V_AI4	15550	UINT	-	Y	0...5 V calibration gain AI4	0…65535	32768	num
Gain_PTC_AI4	15551	UINT	-	Y	PTC calibration gain AI4	0…65535	32768	num
Gain_Ntc_AI5	15552	UINT	-	Y	NTC calibration gain AI5	0…65535	32768	num
Gain_PT1000_AI5	15553	UINT	-	Y	PT1000 calibration gain AI5	0…65535	32768	num
Gain_5Vr_AI5	15554	UINT	-	Y	0...5 Vr calibration gain AI5	0…65535	32768	num
Gain_10V_AI5	15555	UINT	-	Y	0...10 V calibration gain AI5	0…65535	32768	num
Gain_mA_AI5	15556	UINT	-	Y	4...20 mA calibration gain AI5	0…65535	32768	num
Gain_5V_AI5	15557	UINT	-	Y	0...5 V calibration gain AI5	0…65535	32768	num
Gain_PTC_AI5	15558	UINT	-	Y	PTC calibration gain AI5	0…65535	32768	num
Gain_Ntc_AI6	15559	UINT	-	Y	NTC calibration gain AI6	0…65535	32768	num
Gain_PT1000_AI6	15560	UINT	-	Y	PT1000 calibration gain AI6	0…65535	32768	num
Gain_5Vr_AI6	15561	UINT	-	Y	0...5 Vr calibration gain AI6	0…65535	32768	num

LABEL	ADDRESS	DATA TYPE	CPL	RESET	DESCRIPTION	RANGE	DEFAULT	U.M.
Gain_10V_AI6	15562	UINT	-	Y	0...10 V calibration gain AI6	0…65535	32768	num
Gain_mA_AI6	15563	UINT	-	Y	4...20 mA calibration gain AI6	0…65535	32768	num
Gain_5V_AI6	15564	UINT	-	Y	0...5 V calibration gain AI6	0…65535	32768	num
Gain_PTC_AI6	15565	UINT	-	Y	PTC calibration gain AI66	0…65535	32768	num
Gain_Ntc_AI7	15566	UINT	-	Y	NTC calibration gain AI7	0…65535	32768	num
Gain_PT1000_AI7	15567	UINT	-	Y	PT1000 calibration gain AI7	0…65535	32768	num
Gain_5Vr_AI7	15568	UINT	-	Y	0...5 Vr calibration gain AI7	0…65535	32768	num
Gain_10V_AI7	15569	UINT	-	Y	0...10 V calibration gain AI7	0…65535	32768	num
Gain_mA_AI7	15570	UINT	-	Y	4...20 mA calibration gain AI7	0…65535	32768	num
Gain_5V_AI7	15571	UINT	-	Y	0...5 V calibration gain AI7	0…65535	32768	num
Gain_PTC_AI7	15572	UINT	-	Y	PTC calibration gain AI7	0…65535	32768	num
Offs_Ntc_AI1	15608	INT	-1	Y	NTC calibration offset AI1	-32768…32767	0	num
Offs_PT1000_AI1	15609	INT	-1	Y	PT1000 calibration offset AI1	-32768…32767	0	num
Offs_5Vr_AI1	15610	INT	-1	Y	0...5 Vr calibration offset AI1	-32768…32767	0	num
Offs_10V_AI1	15611	INT	-1	Y	0...10 V calibration offset AI1	-32768…32767	0	num
Offs_mA_AI1	15612	INT	-1	Y	4...20 mA calibration offset AI1	-32768…32767	0	num
Offs_5V_AI1	15613	INT	-1	Y	0...5 V calibration offset AI1	-32768…32767	0	num
Offs_PTC_AI1	15614	INT	-1	Y	PTC calibration offset AI1	-32768…32767	0	num
Offs_Ntc_AI2	15615	INT	-1	Y	NTC calibration offset AI2	-32768…32767	0	num
Offs_PT1000_AI2	15616	INT	-1	Y	PT1000 calibration offset AI2	-32768…32767	0	num
Offs_5Vr_AI2	15617	INT	-1	Y	0...5 Vr calibration offset AI2	-32768…32767	0	num
Offs_10V_AI2	15618	INT	-1	Y	0...10 V calibration offset AI2	-32768…32767	0	num
Offs_mA_AI2	15619	INT	-1	Y	4...20 mA calibration offset AI2	-32768…32767	0	num
Offs_5V_AI2	15620	INT	-1	Y	0...5 V calibration offset AI2	-32768…32767	0	num
Offs_PTC_AI2	15621	INT	-1	Y	PTC calibration offset AI2	-32768…32767	0	num
Offs_Ntc_AI3	15622	INT	-1	Y	NTC calibration offset AI3	-32768…32767	0	num
Offs_PT1000_AI3	15623	INT	-1	Y	PT1000 calibration offset AI3	-32768…32767	0	num
Offs_5Vr_AI3	15624	INT	-1	Y	0...5 Vr calibration offset AI3	-32768…32767	0	num
Offs_10V_AI3	15625	INT	-1	Y	0...10 V calibration offset AI3	-32768…32767	0	num
Offs_mA_AI3	15626	INT	-1	Y	4...20 mA calibration offset AI3	-32768…32767	0	num
Offs_5V_AI3	15627	INT	-1	Y	0...5 V calibration offset AI3	-32768…32767	0	num
Offs_PTC_AI3	15628	INT	-1	Y	PTC calibration offset AI3	-32768…32767	0	num
Offs_Ntc_AI4	15629	INT	-1	Y	NTC calibration offset AI4	-32768…32767	0	num
Offs_PT1000_AI4	15630	INT	-1	Y	PT1000 calibration offset AI4	-32768…32767	0	num
Offs_5Vr_AI4	15631	INT	-1	Y	0...5 Vr calibration offset AI4	-32768…32767	0	num
Offs_10V_AI4	15632	INT	-1	Y	0...10 V calibration offset AI4	-32768…32767	0	num
Offs_mA_AI4	15633	INT	-1	Y	4...20 mA calibration offset AI4	-32768…32767	0	num
Offs_5V_AI4	15634	INT	-1	Y	0...5 V calibration offset AI4	-32768…32767	0	num
Offs_PTC_AI4	15635	INT	-1	Y	PTC calibration offset AI4	-32768…32767	0	num

LABEL	ADDRESS	DATA TYPE	CPL	RESET	DESCRIPTION	RANGE	DEFAULT	U.M.
Offs_Ntc_AI5	15636	INT	-1	Y	NTC calibration offset AI5	-32768…32767	0	num
Offs_PT1000_AI5	15637	INT	-1	Y	PT1000 calibration offset AI5	-32768…32767	0	num
Offs_5Vr_AI5	15638	INT	-1	Y	0...5 Vr calibration offset AI5	-32768…32767	0	num
Offs_10V_AI5	15639	INT	-1	Y	0...10 V calibration offset AI5	-32768…32767	0	num
Offs_mA_AI5	15640	INT	-1	Y	4...20 mA calibration offset AI5	-32768…32767	0	num
Offs_5V_AI5	15641	INT	-1	Y	0...5 V calibration offset AI5	-32768…32767	0	num
Offs_PTC_AI5	15642	INT	-1	Y	PTC calibration offset AI5	-32768…32767	0	num
Offs_Ntc_AI6	15643	INT	-1	Y	NTC calibration offset AI6	-32768…32767	0	num
Offs_PT1000_AI6	15644	INT	-1	Y	PT1000 calibration offset AI6	-32768…32767	0	num
Offs_5Vr_AI6	15645	INT	-1	Y	0...5 Vr calibration offset AI6	-32768…32767	0	num
Offs_10V_AI6	15646	INT	-1	Y	0...10 V calibration offset AI6	-32768…32767	0	num
Offs_mA_AI6	15647	INT	-1	Y	4...20 mA calibration offset AI6	-32768…32767	0	num
Offs_5V_AI6	15648	INT	-1	Y	0...5 V calibration offset AI6	-32768…32767	0	num
Offs_PTC_AI6	15649	INT	-1	Y	PTC calibration offset AI6	-32768…32767	0	num
Offs_Ntc_AI7	15650	INT	-1	Y	NTC calibration offset AI7	-32768…32767	0	num
Offs_PT1000_AI7	15651	INT	-1	Y	PT1000 calibration offset AI7	-32768…32767	0	num
Offs_5Vr_AI7	15652	INT	-1	Y	0...5 Vr calibration offset AI7	-32768…32767	0	num
Offs_10V_AI7	15653	INT	-1	Y	0...10 V calibration offset AI7	-32768…32767	0	num
Offs_mA_AI7	15654	INT	-1	Y	4...20 mA calibration offset AI7	-32768…32767	0	num
Offs_5V_AI7	15655	INT	-1	Y	0...5 V calibration offset AI7	-32768…32767	0	num
Offs_PTC_AI7	15656	INT	-1	Y	PTC calibration offset AI7	-32768…32767	0	num

Calibration AO Folder

LABEL	ADDRESS	DATA TYPE	CPL	RESET	DESCRIPTION	RANGE	DEFAULT	U.M.
Gain_10V_AO1	15692	UINT	-	Y	0...10 V calibration gain AO1	0…65535	3276-8	num
Gain_mA_AO1	15693	UINT	-	Y	4...20 mA calibration gain AO1	0…65535	3276-8	num
Gain_10V_AO2	15694	UINT	-	Y	0...10 V calibration gain AO2	0…65535	3276-8	num
Gain_mA_AO2	15695	UINT	-	Y	4...20 mA calibration gain AO2	0…65535	3276-8	num
Gain_10V_AO3	15696	UINT	-	Y	0...10 V calibration gain AO3	0…65535	3276-8	num
Gain_mA_AO3	15697	UINT	-	Y	4...20 mA calibration gain AO3	0…65535	3276-8	num
Gain_10V_AO4	15698	UINT	-	Y	0...10 V calibration gain AO4	0…65535	3276-8	num
Gain_mA_AO4	15699	UINT	-	Y	4...20 mA calibration gain AO4	0…65535	3276-8	num

LABEL	ADDRESS	DATA TYPE	CPL	RESET	DESCRIPTION	RANGE	DEFAULT	U.M.
Offs_10V_AO1	15704	INT	-1	Y	0...10 V calibration offset AO1	-32768…32767	0	num
Offs_mA_AO1	15705	INT	-1	Y	4...20 mA calibration offset AO1	-32768…32767	0	num
Offs_10V_AO2	15706	INT	-1	Y	0...10 V calibration offset AO2	-32768…32767	0	num
Offs_mA_AO2	15707	INT	-1	Y	4...20 mA calibration offset AO2	-32768…32767	0	num
Offs_10V_AO3	15708	INT	-1	Y	0...10 V calibration offset AO3	-32768…32767	0	num
Offs_mA_AO3	15709	INT	-1	Y	4...20 mA calibration offset AO3	-32768…32767	0	num
Offs_10V_AO4	15710	INT	-1	Y	0...10 V calibration offset AO4	-32768…32767	0	num
Offs_mA_AO4	15711	INT	-1	Y	4...20 mA calibration offset AO4	-32768…32767	0	num

Analog I/O Folder

LABEL	ADDRESS	DATA TYPE	CPL	RESET	DESCRIPTION	RANGE	DEFAULT	U.M.
PWM_polarity_A02	15721	enum	-	-	CL91 PWM Polarity for AO2 in PWM mode • 0 = reverse • 1 = direct	0, 1	1	num
PWM_polarity_A03	15722	enum	-	-	CL92 PWM Polarity for AO3 in PWM mode • 0 = reverse • 1 = direct	0, 1	1	num
PWM_polarity_A04	15723	enum	-	-	CL93 PWM Polarity for AO4 in PWM mode • 0 = reverse • 1 = direct	0, 1	1	num
Temp_UM	15725	enum	-	-	CL08 Unit of temperature measurement • 0 = °C • 1 = °F	0, 1	0	num
Cfg_AI1	15726	enum	-	-	CL00 Type of analog input AI1 • 0 = NTC (NK103) • 1 = DI • 2 = NTC (103AT) • 3 = 4…20 mA • 4 = 0…10 V • 5 = 0…5 V (Ratiometric) • 6 = Pt1000 • 7 = hΩ (NTC) • 8 = daΩ (Pt1000) • 9 = PTC • 10 = 0…5 V • 11 = 0…20 mA	0…11	2	num
Cfg_AI2	15727	enum	-	-	CL01 Type of analog input AI2 See *Cfg_AI1*	0…11	2	num
Cfg_AI3	15728	enum	-	-	CL02 Type of analog input AI3	0…11	2	num

LABEL	ADDRESS	DATA TYPE	CPL	RESET	DESCRIPTION	RANGE	DEFAULT	U.M.
					See *Cfg_AI1*			
Cfg_AI4	15729	enum	-	-	CL03 Type of analog input AI4 See *Cfg_AI1*	0…11	2	num
Cfg_AI5	15730	enum	-	-	CL04 Type of analog input AI5 See *Cfg_AI1*	0…11	2	num
Cfg_AI6	15731	enum	-	-	CL05 Type of analog input AI6 See *Cfg_AI1*	0…11	2	num
Cfg_AI7	15732	enum	-	-	CL06 Type of analog input AI7 • 0 = NTC (NK103) • 1 = DI • 2 = NTC (103AT) • 4 = 0…10 V • 6 = Pt1000 • 7 = hΩ (NTC) • 8 = daΩ (Pt1000) • 9 = PTC • 3, 5 = Reserved	0…9	2	num
FullScaleMin_AI1	15736	INT	-1	-	CL10 First value analog input AI1 scale **NOTE:** Minimum full scale: for current probes, value at 4 mA, for 0…10 V voltage probes, value at 0 V, for ratiometric probes (0…5 V), value at 10% (corresponding to 0.5 V).	-9999…9999	0	
FullScaleMax_AI1	15737	INT	-1	-	CL11 Last value analog input AI1 scale **NOTE:** Maximum full scale for current probes, value at 20 mA, for 0…10 V voltage probes, value at 10 V, for ratiometric probes (0…5 V), value at 90% (corresponding to 4.5 V).	-9999…9999	1000	
FullScaleMin_AI2	15738	INT	-1	-	CL12 First value analog input AI2 scale See *FullScaleMin_AI1*	-9999…9999	0	
FullScaleMax_AI2	15739	INT	-1	-	CL13 Last value analog input AI2 scale See *FullScaleMax_AI1*	-9999…9999	1000	
FullScaleMin_AI3	15740	INT	-1	-	CL14 First value analog input AI3 scale See *FullScaleMin_AI1*	-9999…9999	0	
FullScaleMax_AI3	15741	INT	-1	-	CL15 Last value analog input AI3 scale See *FullScaleMax_AI1*	-9999…9999	1000	
FullScaleMin_AI4	15742	INT	-1	-	CL16 First value analog input AI4 scale See *FullScaleMin_AI1*	-9999…9999	0	
FullScaleMax_AI4	15743	INT	-1	-	CL17 Last value analog input AI4 scale See *FullScaleMax_AI1*	-9999…9999	1000	

LABEL	ADDRESS	DATA TYPE	CPL	RESET	DESCRIPTION	RANGE	DEFAULT	U.M.
FullScaleMin_AI5	15744	INT	-1	-	CL18 First value analog input AI5 scale See *FullScaleMin_AI1*	-9999…9999	0	
FullScaleMax_AI5	15745	INT	-1	-	CL19 Last value analog input AI5 scale See *FullScaleMax_AI1*	-9999…9999	1000	
FullScaleMin_AI6	15746	INT	-1	-	CL28 First value analog input AI6 scale See *FullScaleMin_AI1*	-9999…9999	0	
FullScaleMax_AI6	15747	INT	-1	-	CL29 Last value analog input AI6 scale See *FullScaleMax_AI1*	-9999…9999	1000	
Calibration_AI1	15748	INT	-1	-	CL20 Analog input AI1 differential	-1000…1000	0	
Calibration_AI2	15749	INT	-1	-	CL21 Analog input AI2 differential	-1000…1000	0	
Calibration_AI3	15750	INT	-1	-	CL22 Analog input AI3 differential	-1000…1000	0	
Calibration_AI4	15751	INT	-1	-	CL23 Analog input AI4 differential	-1000…1000	0	
Calibration_AI5	15752	INT	-1	-	CL24 Analog input AI5 differential	-1000…1000	0	
Calibration_AI6	15753	INT	-1	-	CL25 Analog input AI6 differential	-1000…1000	0	
Calibration_AI7	15754	INT	-1	-	CL26 Analog input AI7 differential	-1000…1000	0	
FullScaleMin_AI7	15756	INT	-1	-	CL30 First value analog input AI7 scale **NOTE:** Minimum full scale: for current probes, value at 4 mA, for 0…10 V voltage probes, value at 0 V.	-9999…9999	0	
FullScaleMax_AI7	15757	INT	-1	-	CL31 Last value analog input AI7 scale **NOTE:** Maximum full scale for current probes, value at 20 mA, for 0…10 V voltage probes, value at 10 V.	-9999…9999	1000	
Cfg_AO1	15758	enum	-	-	CL60 Type of analog output AO1 • 0 = 0…10 V • 1 = Reserved • 2 = 4…20 mA	0...2	0	num
Cfg_AO2	15759	enum	-	-	CL61 Type of analog output AO2 • 0 = 0…10 V • 1 = PWM	0, 1	0	num
Cfg_AO3	15760	enum	-	-	CL62 Type of analog output AO3 • 0 = 0…10 V • 1 = PWM	0, 1	0	num
Cfg_AO4	15761	enum	-	-	CL63 Type of analog output AO4 • 0 = 0…10 V • 1 = PWM	0, 1	0	num
PWM_frequency_A02	15770	UINT	-	-	CL81 PWM Frequency for AO2 in PWM mode	0…2000	1000	Hz
PWM_frequency_A03	15771	UINT	-	-	CL82 PWM Frequency for AO3 in PWM mode	0…2000	1000	Hz
PWM_frequency_A04	15772	UINT	-	-	CL83 PWM Frequency for AO4 in PWM mode	0…2000	1000	Hz

LABEL	ADDRESS	DATA TYPE	CPL	RESET	DESCRIPTION	RANGE	DEFAULT	U.M.
FullScaleMin_AO1	15884	INT	-	-	CL70 First value analog output AO1 scale **NOTE:** Minimum full scale: for current AO, value at 4 mA, for 0…10 V voltage AO, value at 0 V.	0…1000	0	
FullScaleMin_AO2	15885	INT	-	-	CL72 First value analog output AO2 scale See *FullScaleMin_AO1*	0…1000	0	
FullScaleMin_AO3	15886	INT	-	-	CL74 First value analog output AO3 scale See *FullScaleMin_AO1*	0…1000	0	
FullScaleMin_AO4	15887	INT	-	-	CL76 First value analog output AO4 scale See *FullScaleMin_AO1*	0…1000	0	
FullScaleMax_AO1	15888	INT	-	-	CL71 Last value analog output AO1 scale **NOTE:** Maximum full scale for current AO, value at 20 mA, for 0…10 V voltage AO, value at 10 V.	0…1000	1000	
FullScaleMax_AO2	15889	INT	-	-	CL73 Last value analog output AO2 scale See *FullScaleMax_AO1*	0…1000	1000	
FullScaleMax_AO3	15890	INT	-	-	CL75 Last value analog output AO3 scale See *FullScaleMax_AO1*	0…1000	1000	
FullScaleMax_AO4	15891	INT	-	-	CL77 Last value analog output AO4 scale See *FullScaleMax_AO1*	0…1000	1000	

RS485-1 Folder

LABEL	ADDRESS	DATA TYPE	CPL	RESET	DESCRIPTION	RANGE	DEFAULT	U.M.
Addr_RS485_1	15774	UINT	-	Y	CF30 RS485-1 address	1…247	1	num
Baud_RS485_1	15779	enum	-	Y	CF31 RS485-1 baud rate protocol • 0 = 9600 baud • 1 = 19200 baud • 2 = 38400 baud • 3 = 57600 baud • 4 = 76800 baud • 5 = 115200 baud	0…5	1	num
Parity_RS485_1	15778	enum	-	Y	CF32 RS485-1 parity protocol • 0 = NULL • 1 = ODD • 2 = EVEN	0…2	2	num

RS485-2 Folder

LABEL	ADDRESS	DATA TYPE	CPL	RESET	DESCRIPTION	RANGE	DEFAULT	U.M.
Addr_RS485_2	15782	UINT	-	Y	CF35 RS485-2 address	1…247	1	num
Baud_RS485_2	15787	enum	-	Y	CF36 RS485-2 baud rate protocol • 0 = 9600 baud • 1 = 19200 baud • 2 = 38400 baud • 3 = 57600 baud • 4 = 76800 baud • 5 = 115200 baud	0…5	1	num
Parity_RS485_2	15786	enum	-	Y	CF37 RS485-2 parity protocol • 0 = NULL • 1 = ODD • 2 = EVEN	0…2	2	num

CANopen Folder

LABEL	ADDRESS	DATA TYPE	CPL	RESET	DESCRIPTION	RANGE	DEFAULT	U.M.
Baudrate	15900	enum	-	Y	CF21 Baudrate • 0= Disabled • 1 = 1000 Kb/s • 2 = 800 Kb/s • 3 = 500 Kb/s • 4 = 250 Kb/s • 5 = 125 Kb/s • 6 = 100 Kb/s • 7 = 50 Kb/s • 8 = 20 Kb/s • 9 = 10 Kb/s • 10 = Auto		3	Kbit/s
NodeId	15902	USINT	-	Y	CF20 CANopen slave node unique ID	1…127	1	
SyncCOB	15903	UDINT	-	Y	Sync object COBID		128	
GuardTime	15905	UINT	-	Y	Node guarding time		500	ms
HeartbeatTimeConsumer	15906	UDINT	-	Y	Heartbeat consumer time		0	ms
HeartbeatTimeProducer	15908	UINT	-	Y	Heartbeat producer time		0	ms
LifeTimeFactor	15909	UINT	-	Y	Life time factor		3	
CommCyclePeriod	15910	UDINT	-	Y	Communication cycle period		0	us
PdoCobid	15920	UDINT	-	Y	PDO Rx 1 COBID		(1)	
TransmissionType	15922	enum	-	Y	Transmission Type		(2)	
NumMappings	15923	USINT	-	Y	Number of mapped objects	0…8	0	
Mapping 1	15924	UDINT	-	Y	Mapped object 1		(3)	
Mapping 2	15926	UDINT	-	Y	Mapped object 2		(3)	

LABEL	ADDRESS	DATA TYPE	CPL	RESET	DESCRIPTION	RANGE	DEFAULT	U.M.
Mapping 3	15928	UDINT	-	Y	Mapped object 3		(3)	
Mapping 4	15930	UDINT	-	Y	Mapped object 4		(3)	
Mapping 5	15932	UDINT	-	Y	Mapped object 5		(3)	
Mapping 6	15934	UDINT	-	Y	Mapped object 6		(3)	
Mapping 7	15936	UDINT	-	Y	Mapped object 7		(3)	
Mapping 8	15938	UDINT	-	Y	Mapped object 8		(3)	
PdoCobid	15940	UDINT	-	Y	PDO Rx 2 COBID		(4)	
TransmissionType	15942	enum	-	Y	Transmission Type		(2)	
NumMappings	15943	USINT	-	Y	Number of mapped objects	0…8	0	
Mapping 1	15944	UDINT	-	Y	Mapped object 1		(3)	
Mapping 2	15946	UDINT	-	Y	Mapped object 2		(3)	
Mapping 3	15948	UDINT	-	Y	Mapped object 3		(3)	
Mapping 4	15950	UDINT	-	Y	Mapped object 4		(3)	
Mapping 5	15952	UDINT	-	Y	Mapped object 5		(3)	
Mapping 6	15954	UDINT	-	Y	Mapped object 6		(3)	
Mapping 7	15956	UDINT	-	Y	Mapped object 7		(3)	
Mapping 8	15958	UDINT	-	Y	Mapped object 8		(3)	
PdoCobid	15960	UDINT	-	Y	PDO Rx 3 COBID		(5)	
TransmissionType	15962	enum	-	Y	Transmission Type		(2)	
NumMappings	15963	USINT	-	Y	Number of mapped objects	0…8	0	
Mapping 1	15964	UDINT	-	Y	Mapped object 1		(3)	
Mapping 2	15966	UDINT	-	Y	Mapped object 2		(3)	
Mapping 3	15968	UDINT	-	Y	Mapped object 3		(3)	
Mapping 4	15970	UDINT	-	Y	Mapped object 4		(3)	
Mapping 5	15972	UDINT	-	Y	Mapped object 5		(3)	
Mapping 6	15974	UDINT	-	Y	Mapped object 6		(3)	
Mapping 7	15976	UDINT	-	Y	Mapped object 7		(3)	
Mapping 8	15978	UDINT	-	Y	Mapped object 8		(3)	
PdoCobid	15980	UDINT	-	Y	PDO Rx 4 COBID		(6)	
TransmissionType	15982	enum	-	Y	Transmission Type		(2)	
NumMappings	15983	USINT	-	Y	Number of mapped objects	0…8	0	
Mapping 1	15984	UDINT	-	Y	Mapped object 1		(3)	
Mapping 2	15986	UDINT	-	Y	Mapped object 2		(3)	
Mapping 3	15988	UDINT	-	Y	Mapped object 3		(3)	
Mapping 4	15990	UDINT	-	Y	Mapped object 4		(3)	
Mapping 5	15992	UDINT	-	Y	Mapped object 5		(3)	
Mapping 6	15994	UDINT	-	Y	Mapped object 6		(3)	
Mapping 7	15996	UDINT	-	Y	Mapped object 7		(3)	
Mapping 8	15998	UDINT	-	Y	Mapped object 8		(3)	

LABEL	ADDRESS	DATA TYPE	CPL	RESET	DESCRIPTION	RANGE	DEFAULT	U.M.
PdoCobid	16000	UDINT	-	Y	PDO Tx 1 COBID		(7)	
TransmissionType	16002	enum	-	Y	Transmission Type		(2)	
NumMappings	16003	USINT	-	Y	Number of mapped objects	0…8	0	
Mapping 1	16004	UDINT	-	Y	Mapped object 1		(3)	
Mapping 2	16006	UDINT	-	Y	Mapped object 2		(3)	
Mapping 3	16008	UDINT	-	Y	Mapped object 3		(3)	
Mapping 4	16010	UDINT	-	Y	Mapped object 4		(3)	
Mapping 5	16012	UDINT	-	Y	Mapped object 5		(3)	
Mapping 6	16014	UDINT	-	Y	Mapped object 6		(3)	
Mapping 7	16016	UDINT	-	Y	Mapped object 7		(3)	
Mapping 8	16018	UDINT	-	Y	Mapped object 8		(3)	
Inhibit Time	16020	UINT	-	Y	Inhibit Time		0	
Event Timer	16021	UINT	-	Y	Event Timer		0	
PdoCobid	16030	UDINT	-	Y	PDO Tx 2 COBID		(8)	
TransmissionType	16032	enum	-	Y	Transmission Type		(2)	
NumMappings	16033	USINT	-	Y	Number of mapped objects	0…8	0	
Mapping 1	16034	UDINT	-	Y	Mapped object 1		(3)	
Mapping 2	16036	UDINT	-	Y	Mapped object 2		(3)	
Mapping 3	16038	UDINT	-	Y	Mapped object 3		(3)	
Mapping 4	16040	UDINT	-	Y	Mapped object 4		(3)	
Mapping 5	16042	UDINT	-	Y	Mapped object 5		(3)	
Mapping 6	16044	UDINT	-	Y	Mapped object 6		(3)	
Mapping 7	16046	UDINT	-	Y	Mapped object 7		(3)	
Mapping 8	16048	UDINT	-	Y	Mapped object 8		(3)	
Inhibit Time	16050	UINT	-	Y	Inhibit Time		0	
Event Timer	16051	UINT	-	Y	Event Timer		0	
PdoCobid	16060	UDINT	-	Y	PDO Tx 3 COBID		(9)	
TransmissionType	16062	enum	-	Y	Transmission Type		(2)	
NumMappings	16063	USINT	-	Y	Number of mapped objects	0…8	0	
Mapping 1	16064	UDINT	-	Y	Mapped object 1		(3)	
Mapping 2	16066	UDINT	-	Y	Mapped object 2		(3)	
Mapping 3	16068	UDINT	-	Y	Mapped object 3		(3)	
Mapping 4	16070	UDINT	-	Y	Mapped object 4		(3)	
Mapping 5	16072	UDINT	-	Y	Mapped object 5		(3)	
Mapping 6	16074	UDINT	-	Y	Mapped object 6		(3)	
Mapping 7	16076	UDINT	-	Y	Mapped object 7		(3)	
Mapping 8	16078	UDINT	-	Y	Mapped object 8		(3)	
Inhibit Time	16080	UINT	-	Y	Inhibit Time		0	
Event Timer	16081	UINT	-	Y	Event Timer		0	
PdoCobid	16090	UDINT	-	Y	PDO Tx 4 COBID		(10)	

LABEL	ADDRESS	DATA TYPE	CPL	RESET	DESCRIPTION	RANGE	DEFAULT	U.M.
TransmissionType	16092	enum	-	Y	Transmission Type		(2)	
NumMappings	16093	USINT	-	Y	Number of mapped objects	0…8	0	
Mapping 1	16094	UDINT	-	Y	Mapped object 1		(3)	
Mapping 2	16096	UDINT	-	Y	Mapped object 2		(3)	
Mapping 3	16098	UDINT	-	Y	Mapped object 3		(3)	
Mapping 4	16100	UDINT	-	Y	Mapped object 4		(3)	
Mapping 5	16102	UDINT	-	Y	Mapped object 5		(3)	
Mapping 6	16104	UDINT	-	Y	Mapped object 6		(3)	
Mapping 7	16106	UDINT	-	Y	Mapped object 7		(3)	
Mapping 8	16108	UDINT	-	Y	Mapped object 8		(3)	
Inhibit Time	16110	UINT	-	Y	Inhibit Time		0	
Event Timer	16111	UINT	-	Y	Event Timer		0	

(1) 0x80000201

(2) asynchronous on event

(3) 0x00000000

(4) 0x80000301

(5) 0x80000401

(6) 0x80000501

(7) 0x80000181

(8) 0x80000281

(9) 0x80000381

(10) 0x80000481

Display Folder

LABEL	ADDRESS	DATA TYPE	CPL	RESET	DESCRIPTION	RANGE	DEFAULT	U.M.
Inst_PWD	15780	UINT	-	-	Ui27 Installation engineer password	0…255	1	num
Manuf_PWD	15781	UINT	-	-	Ui28 Manufacturer password	0…255	2	num
Pass_reset_time	15788	UINT	-	-	Ui29 Visibility level reset time	0.0…100.0	10.0	s
Key_hold_time	15799	UINT	-	-	Ui26 Key hold time to enable funtion	0…9999	1400	ms
KeyboardLockTime	15880	UDINT	-	-	UI30 Keyboard Lock Time	0…1200	0	s/10
KeyboardUnlockTime	15882	UDINT	-	-	UI31 Keyboard Unlock Time	10…1200	30	s/10
Menu folder_time	15892	UINT	-	-	UI32 Menu folder timeout	0.0…100.0	30.0	s

Configuration Folder

LABEL	ADDRESS	DATA TYPE	CPL	RESET	DESCRIPTION	RANGE	DEFAULT	U.M.
RTC_present	15796	UINT	-	-	CF50 RTC present	0, 1	1	num
Customer code 1	15797	UINT	-	-	CF60 Customer code 1	0…999	0	num
Customer code 2	15798	UINT	-	-	CF61 Customer code 2	0…999	0	num

EEV Folder

LABEL	ADDRESS	DATA TYPE	CPL	RESET	DESCRIPTION	RANGE	DEFAULT	U.M.
dE00	15800	UINT	-	-	Valve selection	0…255	0	num
dE01	15801	UINT	-	-	Maximum speed	0…999	40	Step/s
dE02	15802	UINT	-	-	Full opening	0…9990	250	Steps
dE03	15803	UINT	-	-	Extra movement in full closure	0…999	0	Steps
dE04	15804	UINT	-1	-	Reserved	-560…850	260	mA
dE05	15805	UINT	-	-	Reserved	0…999	46	Ohm
dE06	15806	UINT	-	-	Reserved	0…850	0	mA
dE07	15807	enum	-	-	Type of stepper motor control • 0 = FULL STEP • 1 = HALF STEP • 2 = RESERVED	0…2	1	num
dE08	15808	UINT	-	-	Duty cycle	0…100	100	%
dE09	15809	UINT	-	-	Acceleration/deceleration	0…999	0	num
dE80	15810	UINT	-	-	Minimum speed for acceleration/ deceleration	0…999	0	Steps/ s
n10	15811	UINT	-	-	Pause time	0…999	0	ms
n11	15812	UINT	-	-	Extra movement in full closure periodical (n15)	0…9990	30	Steps
n12	15813	UINT	-	-	Change direction counter limit	0…9990	0	num
n13	15814	UINT	-	-	Extra movement in full opening	0…9990	0	Steps
n14	15815	UINT	-	-	Duty cycle period of activation/ deactivation	0…9990	0	s/10
n15	15816	UINT	-	-	Period of periodical synchronization	0…9990	0	hour
n16	15817	enum	-	-	Unipolar / Bipolar valve selection • 1 = Bipolar • 2 = Unipolar	1…2	2	num
n17	15818	UINT	-	-	Maximum speed in emergency closing	0…999	40	Steps/ s
n18	15819	enum	-	-	Reserved	0, 1	0	num
n19	15820	UINT	-	-	Reserved	0…4095	3072	num
n20	15821	UINT	-	-	Reserved	0…2047	256	num
n21	15822	UINT	-	-	Reserved	0…512	50	num

LABEL	ADDRESS	DATA TYPE	CPL	RESET	DESCRIPTION	RANGE	DEFAULT	U.M.
n22	15823	UINT	-	-	Reserved	0…512	288	num
n23	15824	UINT	-	-	Reserved	0…2047	1296	num
n24	15825	UINT	-	-	Reserved	0…4095	2562	num
n25	15826	UINT	-	-	Reserved	0…4095	240	num
n26	15827	enum	-	-	Periodical override mode • 0 = after period n15 with Open_ at_wr=0 • 1 = after period n15	0, 1	0	num
n27	15828	UINT	-	-	Reserved	0…850	0	mA
n28	15829	UINT	-	-	Reserved	0…1000	0	°/oo
n29	15830	enum	-	-	Reserved • 0 = no • 1 = open • 2 = close • 3 = both	0…3	0	num
n30	15831	UINT	-	-	Emergency opening percentage	0…1000	0	°/oo
n31	15832	enum	-	-	Behaviour on power fail • 0 = no action • 1 = close	0, 1	1	num
n32	15833	enum	-	-	Unipolar W1+ allocation • 0 = no redirection • 1 = redirect to W1+ • 2 = redirect to W1- • 3 = redirect to W2+ • 4 = redirect to W2-	0…4	0	num
n33	15834	enum	-	-	Unipolar W1- allocation See *n32*	0…4	0	num
n34	15835	enum	-	-	Unipolar W2+ allocation See *n32*	0…4	0	num
n35	15836	enum	-	-	Unipolar W2- allocation See *n32*	0…4	0	num
n36	15837	UINT	-	-	Number of Battery Backup modules	0…2	0	num
n37	15838	UINT	-	-	Valve energization time at startup	0…65535	0	ms
n38	15839	UINT	-	-	Valve energization time at stop	0…65535	0	ms
n39	15840	UINT	-	-	Reserved	0…65535	0	num
n40	15841	UINT	-	-	Reserved	0…65535	0	num

Miscellaneous Folder

LABEL	ADDRESS	DATA TYPE	CPL	RESET	DESCRIPTION	RANGE	DEFAULT	U.M.
CANExpPresenceByPar	16144	UINT	-	-	bit(x) : if 0 the (x+1)-th CAN slave is present, otherwise not present	0…65535	0	num
MbmRtu_DisByPar	16145	enum	-	-	Modbus RTU master disable by parameter • 0 = Enabled • 1 = Disabled	0, 1	0	num

Commissioning

What's in This Part

Commissioning 128

Commissioning

What's in This Chapter

General Description 128
First Commissioning 128
Connection with a PC through Modbus SL/USB 130
Connection for Expansion Module and Remote display 130
BIOS Update 131
Configure the TM173ODEM22R 133

General Description

Overview

The EcoStruxure Machine Expert - HVAC development tool makes it possible to create and customize IEC 61131-3 programs for various types of application. It is possible to download EcoStruxure Machine Expert - HVAC from Schneider-electric web site download center. It is intended for applications in HVAC&R.

EcoStruxure Machine Expert - HVAC Software Component

EcoStruxure Machine Expert - HVAC allows to:

- Create and manage libraries, applications, and diagnostics.
- Manage previously developed applications, upload/download applications, and modify device parameters from a serial port.

PC Connection

M173O can be connected to a PC through the USB port and a USB cable:

- Type C USB (DEVICE). Used to connect M173O to a PC via USB (Type C) / USB (Type A) cable for debugging, commissioning, downloading, and uploading with EcoStruxure Machine Expert - HVAC.

First Commissioning

Overview

There are several processes to connect the PC to the M173O controller:

Protocol	Factory status	Connection with	Connector
Modbus SL	Enabled	USB/RS-485 adapter TSXCUSB485 with cable VW3A83O6D3O.	CN2 / CN3
USB		C/A USB cable	CN11

First Commissioning Procedure

First commission procedure for a M173O controller:

Step	Action
1	Create a project with your M173O controller (see EcoStruxure Machine Expert - HVAC, Operating Guide).
2	Connect your M173O controller to EcoStruxure Machine Expert - HVAC software.
3	Load the application in the M173O controller (see EcoStruxure Machine Expert - HVAC, Operating Guide)
4	Run the application.

CyberSecurity Defense-in-Depth

Your Schneider Electric product is equipped with security-enabling features.

These features arrive in a default state and can be configured for your installation needs. Please note that disabling or modifying settings within the scope of these individual features can impact the overall security robustness of the device and ultimately the security posture of your network in either positive or negative ways. Review the security intent and recommendations for the optimal use of your device's security features.

Products are hardened to increase security robustness. This is an ongoing process consisting of secure development practices, inclusion of security features and testing at our security test facilities. Following system hardening best practices is also necessary to help ensure your overall system security.

See the Recommended Cybersecurity Best Practices for suggested best practices.

Schneider Electric adheres to industry best practices in the development and implementation of control systems. This includes a "Defense-in-Depth" approach to secure an Industrial Control System. This approach places the controllers behind one or more firewalls to restrict access to authorized personnel and protocols only.

⚠ WARNING

UNAUTHENTICATED ACCESS AND SUBSEQUENT UNAUTHORIZED MACHINE OPERATION

- Evaluate whether your environment or your machines are connected to your critical infrastructure and, if so, take appropriate steps in terms of prevention, based on Defense-in-Depth, before connecting the automation system to any network.
- Limit the number of devices connected to a network to the minimum necessary.
- Isolate your industrial network from other networks inside your company.
- Protect any network against unintended access by using firewalls, VPN, or other, proven security measures.
- Monitor activities within your systems.
- Prevent subject devices from direct access or direct link by unauthorized parties or unauthenticated actions.
- Prepare a recovery plan including backup of your system and process information.

Failure to follow these instructions can result in death, serious injury, or equipment damage.

Connection with a PC through Modbus SL/USB

Connecting the PC to the Controller

Direct connection between the PC and the controller:

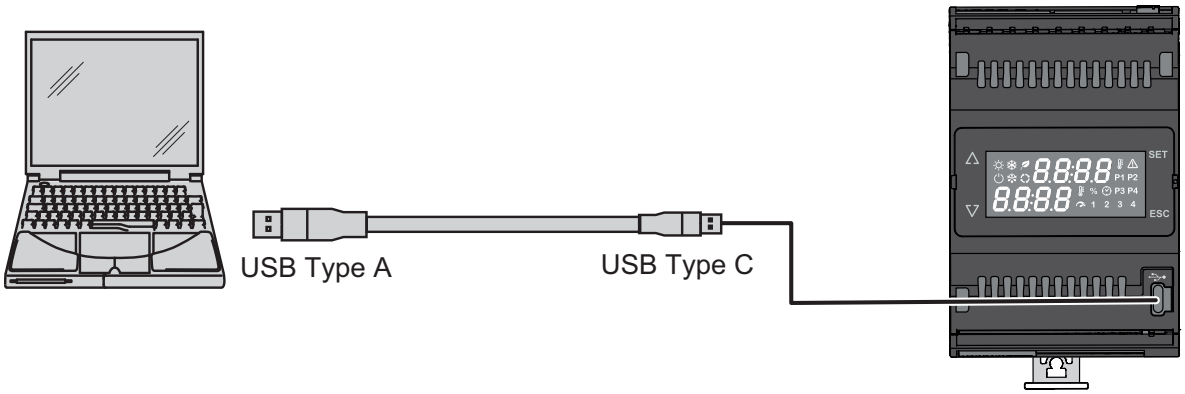

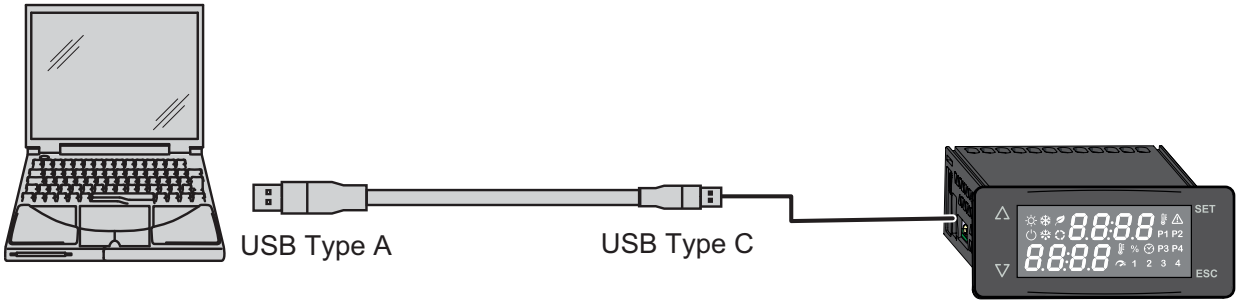

To connect the PC to the controller, use a USB (Type A) / USB (Type C) cable.

Following operations are possible between the PC and the controller in direct USB connection:

Data type	PC → Controller	Controller →PC
Parameters	✓	✓
Controller application	✓	-
BIOS	✓	-

Connection for Expansion Module and Remote display

Connecting The PC to an Expansion Module

Direct connection between the PC and an expansion module:

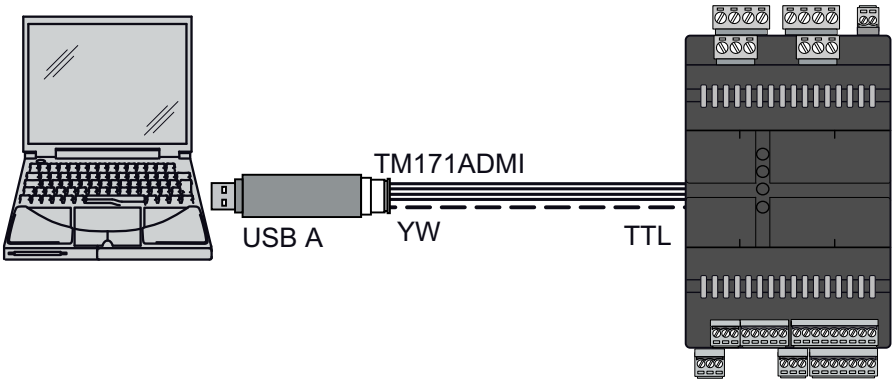

To connect the PC to the expansion module, use a TM171ADMI programming cable (Yellow) on the TTL port of the device.

Following operations are possible between the PC and the Expansion Module:

Data type	PC → Expansion module	Expansion module →PC
Parameters	✓	✓
Controller application	-	-
HMI application	-	-
Data file	-	-
BIOS	✓	-

BIOS Update

Overview

To update the M173O Controller and M173O BIOS:

- Downloading into the M173O from PC with EcoStruxure Machine Expert - HVAC

If you remove power to the device, or there is a power outage or communication interruption during the transfer of the application, your device may become inoperative. If a communication interruption or a power outage occurs, reattempt the transfer. If there is a power outage or communication interruption during a firmware update, or if an invalid firmware is used, your device will become inoperative. In this case, use a valid firmware and reattempt the firmware update.

NOTICE

INOPERABLE EQUIPMENT

- Do not interrupt the transfer of the application program or a firmware change once the transfer has begun.
- Re-initiate the transfer if the transfer is interrupted for any reason.
- Do not attempt to place the device into service until the file transfer has completed successfully.

Failure to follow these instructions can result in equipment damage.

Download Controller BIOS from PC with EcoStruxure Machine Expert - HVAC software

Steps to download Controller BIOS from PC:

Step	Action
1	Connect the M173O via USB, page 130 to the PC.
2	Open EcoStruxure Machine Expert - HVAC software.
3	Open a existing project or create a new one.
4	Select the **Commissioning** tab.
5	In the menu, select **Target** > **Communication settings**.
6	Click **Connect**.
7	Click on the controller name in the **Commissioning** window.
8	Click **BIOS download**.
9	Select the `.bin` file you want to download, located in: • `<C:\Programs>\Schneider Electric\EcoStruxureMachineExpertHVAC\Catalog\TM173O\TM173O_825p0\Firmware`
10	Click **Download** button. The operation may take a few minutes. If the download terminates successfully, a confirmation is displayed.
11	Disconnect the device from the PC.

Download Controller BIOS from USB (Type C) Pen Drive with EcoStruxure Machine Expert - HVAC software

Steps to download Controller BIOS from USB (Type C) Pen Drive:

Step	Action
1	Connect an USB (Type C) pen drive to the to the PC.
2	Open EcoStruxure Machine Expert - HVAC software.
3	Open an existing project or create a new one.
4	Select the **Commissioning** tab.
5	Click on the controller name in the **Commissioning** window.
6	At the bottom of the window, in the **Other operations** section, select the option **Create USB programming files**.
7	Click on the option **Add bios file: yes** in the **Choose settings** window.
8	In the project folder, copy the newly created folder named with the *BIOS* prefix and the *project name* suffix.
9	Transfer files on the USB (Type C) pen drive.
10	Disconnect the USB (Type C) pen drive from the PC.
11	Connect the USB (Type C) pen drive, page 95 to the M173O controller.
12	The controller starts downloading BIOS from the USB (Type C) pen drive. See USB and UPDATE LED, page 107 for more information about User Interface. The operation may take a few minutes. If the download terminates successfully, a confirmation is displayed.
13	Disconnect the USB (Type C) pen drive from the controller.

Download BIOS of Controller, Expansion Module, or Touchscreen Remote Display from PC with EcoStruxure Machine Expert - HVAC Installer software

Steps to download BIOS from PC:

Step	Action
1	Connect the M173O or the Modicon M172 Expansion Module to the PC.
2	Open EcoStruxure Machine Expert - HVAC Installer software.
3	Use the **Network Scan** or add the device you want to update from the **Catalog** to the **Tree**.
4	Click **Connect**.
5	Right-click on the device name in the **Tree**.
6	Select **BIOS download**.

7	Select the `.bin` file you want to download:
	• For M173O, the BIOS files are located in:
	`<C:\Programs>\Schneider Electric\EcoStruxureMachineExpertHVAC\Catalog\TM173O\TM173O_825p0\Firmware`
	• For Modicon M172 Expansion Module, the BIOS files are located in:
	`<C:\Programs>\Schneider Electric\EcoStruxureMachineExpertHVAC\Catalog\TM172E\Firmware_XXX`

8	Click **Download**. The operation may take a few minutes. If the download terminates successfully, a confirmation is displayed.
9	Disconnect the device from the PC.

Download BIOS of TM173DLED

To download BIOS, connect the remote display to the controller and download the BIOS files located in:

`<C:\Programs>\Schneider Electric\EcoStruxureMachineExpertHVAC\Catalog\M173O`

Configure the TM173ODEM22R

General Description

TM173ODEM22R are controllers with Valve Driver.

In the commissioning tab, in the **All Parameters** folder, an **EEV** folder contains all local EEV driver parameters (refer to EEV Folder parameters, page 111) . In I/O values also is an **EEV** folder containing all resources to directly drive and check EEV driver status and alarms (EEV0.Command, EEV0.Open_At_wr, EEV0.Open_at, EEV0.Status, EEV0.Diagnostic, EEV0.Info).

In standard M173O target application an **Electronic Expansion Valve** library is available, containing AFBs to drive or set EEV driver (**EEVDSettings** / **EEVDCntrl**), with the possibility to link these AFBs to the local EEV driver resources.

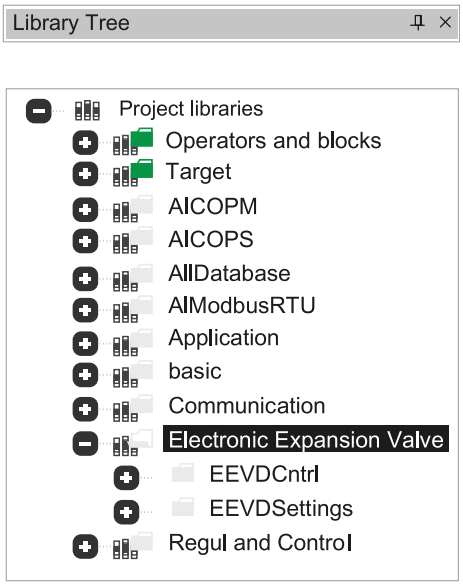

Configuration

To automate the linking of **Electronic Expansion Valve** AFBs to the local EEV driver resources:

Step	Action
1	Create a project with your M173O controller (see EcoStruxure Machine Expert - HVAC, Operating Guide).
2	In the configuration tab, check **Include local EEVD driver AFBs**. 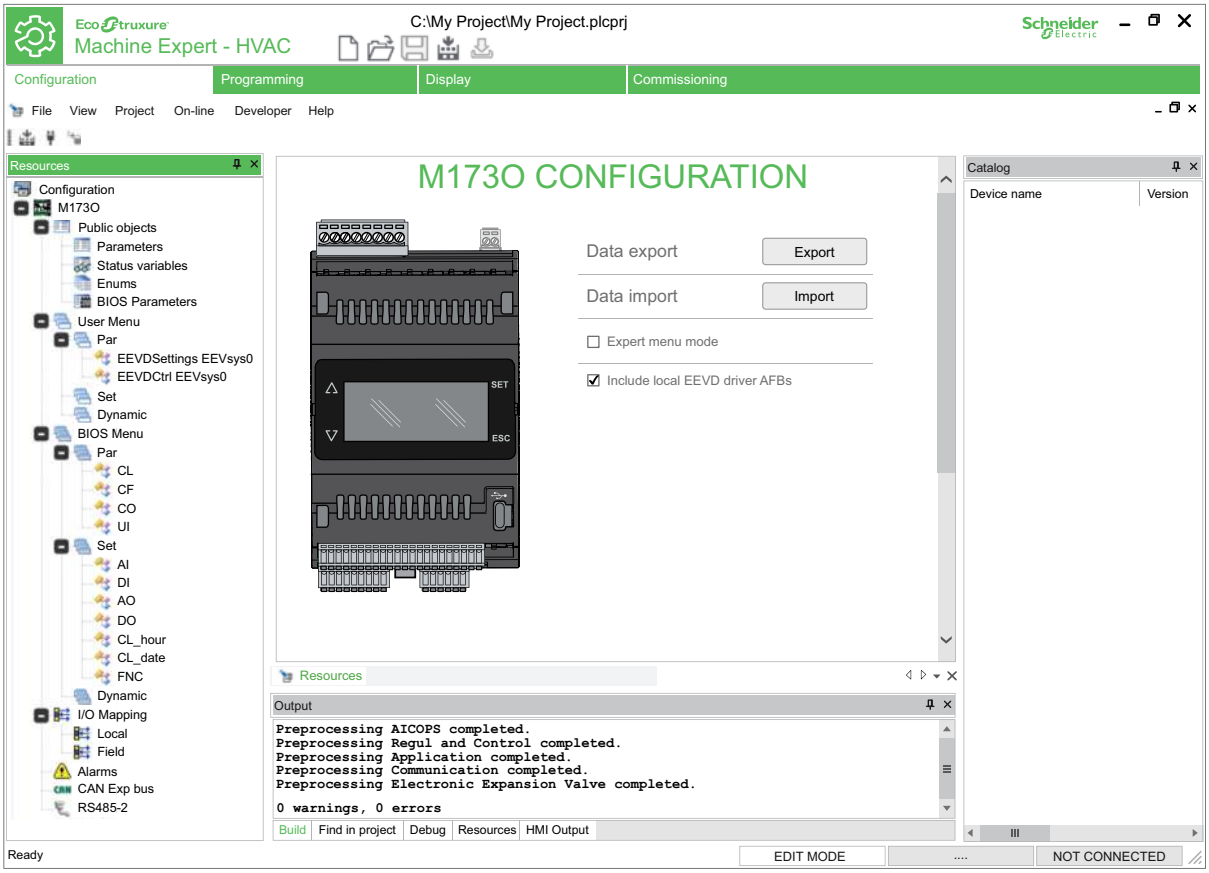

Step	Action
	Result: A window appears: 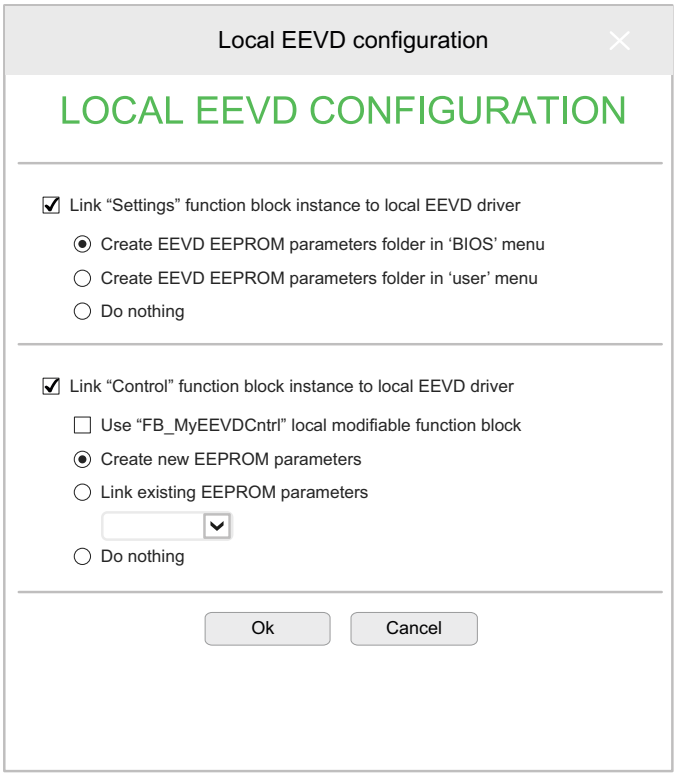
5	Check **Link “Settings” function block instance to local EEVD driver**: commands and status reading are linked to local EEV resources, it means that internal AFB pointers will be initialized with pointers to local EEV driver resources (sysEEV0Commands, sysEEV0Info, sysEEV0OpeningCurr, sysEEV0Status); internal pointers to parameters will be initialized to pointers to internal EEV driver parameters (sysParameter.EEV.dE00, sysParameter.EEV.dE01, …, sysParameter.EEV.n40). If not checked no EEVDSettings AFB will be istantiated.
6	Select where to create the **EEVDSettings EEVsys0** folder with existing local EEV driver parameters: • Create EEVD EEPROM parameters folder in BIOS Menu: a folder **EEV** with local EEV driver parameters will be created on bottom of BIOS Menu/Par. • Create EEVD EEPROM parameters folder in User Menu: a folder **EEVDSettings EEVsys0** with local EEV driver parameters will be created on bottom of User Menu/Par (default). • Do nothing: you must add manually local EEV parameters to menu. Removing check box ‘Include local EEVD driver AFBs’ will be managed deleting also relating folder in menu.
7	Check **Link “Ctrl” function block instance to local EEVD driver**: commands and status reading are linked to local EEV resources, it means that pointers internal to AFB will be initialized with pointers to local EEV driver resources (sysEEV0OpeningReq, sysEEV0Commands, sysEEV0OpeningCurr, sysEEV0Status, sysEEV0Alarms). If not checked no EEVDCntrl AFB will be istantiated.
8	Check **Use “FB_MyEEVDCntrl” local modifiable function block**: an istance of type FB_MyEEVDCntrl will be created with init values correctly written. This will be modifiable.
9	Select how to link parameters to the AFB: • Create new EEPROM parameters: a new set of ‘Cntrl’ parameters will be created in the ‘Parameters’ list and a folder **EEVDCntrl EEVsys0** with this parameters will be created on bottom of User Menu/Par. This will be linked to internal parameters, this means that pointers to parameters internal to AFB will be initialized with pointers to newly created parameters. This list will be added to the list of already created parameters and shared with that of Configuration tab, used with CANopen EEV drivers. • Link existing EEPROM parameters: from a drop down list you can select an already created set of parameters. This will be linked to the AFB instance in the init values. • Do nothing: you must initialize manually internal pointers to parameters. Removing check box ‘Include local EEVD driver AFBs’ will be managed deleting also relating set of parameters and related menu folders but maintaining the set if other instances are linked to them.
10	Click **OK** to validate. If you click **Cancel**, none function block are instantiated nor parameters are created or assigned.

TM173ODEM22R Parameters and Alarms

For more details, refer to the Modicon M172 Electronic Expansion Valve Driver, Preconfigured Valves Parameters Guide , Unipolar Valve Configuration Parameters and Diagnostic Parameter and Internal Alarm Management sections.

Preconfigured Electronic Valves

The valve drivers are provided with a set of parameters corresponding to a set of preconfigured valve references.

For more details, refer to the Modicon M172 Electronic Expansion Valve Driver, Preconfigured Valves Parameters Guide.

Appendices

What's in This Part

Appendices..... 138

Appendices

What's in This Chapter

NTC 10k beta 3435 Resistance Temperature Table 138
NTC 10k-2 beta (25/50) 3977 Resistance Temperature Table 139
Pt1000 Resistance Temperature Table 140
PTC Resistance Temperature Table 143

NTC 10k beta 3435 Resistance Temperature Table

Celsius

T (°C)	R (Ω)	T (°C)	R (Ω)	T (°C)	R (Ω)	T (°C)	R (Ω)	T (°C)	R (Ω)	T (°C)	R (Ω)
-40	187 400	-13	48 590	14	15 270	41	5 630	68	2 366	95	1 108
-39	177 500	-12	46 410	15	14 680	42	5 440	69	2 296	96	1 080
-38	168 200	-11	44 350	16	14 110	43	5 257	70	2 229	97	1 052
-37	159 400	-10	42 390	17	13 570	44	5 081	71	2 164	98	1 025
-36	151 100	-9	40 500	18	13 050	45	4 912	72	2 101	99	999.0
-35	143 400	-8	38 700	19	12 560	46	4 750	73	2 040	100	973.7
-34	136 100	-7	37 000	20	12 090	47	4 594	74	1 981	101	949.0
-33	129 200	-6	35 380	21	11 630	48	4 444	75	1 925	102	925.0
-32	122 800	-5	33 850	22	11 200	49	4 300	76	1 870	103	901.8
-31	116 700	-4	32 390	23	10 780	50	4 162	77	1 817	104	879.3
-30	110 900	-3	31 000	24	10 380	51	4 027	78	1 766	105	857.4
-29	105 400	-2	29 690	25	10 000	52	3 897	79	1 716	106	836.3
-28	100 100	-1	28 440	26	9 633	53	3 773	80	1 669	107	815.7
-27	95 220	0	27 250	27	9 281	54	3 653	81	1 622	108	795.8
-26	90 570	1	26 100	28	8 945	55	3 537	82	1 577	109	776.4
-25	86 180	2	25 000	29	8 623	56	3 426	83	1 534	110	757.6
-24	82 040	3	23 960	30	8 314	57	3 319	84	1 492	111	739.2
-23	78 130	4	22 970	31	8 016	58	3 216	85	1 451	112	721.4
-22	74 440	5	22 030	32	7 730	59	3 117	86	1 412	113	704.1
-21	70 940	6	21 130	33	7 456	60	3 022	87	1 374	114	687.3
-20	67 640	7	20 280	34	7 193	61	2 929	88	1 337	115	671.0
-19	64 440	8	19 460	35	6 941	62	2 839	89	1 301	116	655.2
-18	61 420	9	18 690	36	6 700	63	2 753	90	1 266	117	639.8
-17	58 570	10	17 950	37	6 468	64	2 670	91	1 233	118	624.8
-16	55 870	11	17 230	38	6 246	65	2 589	92	1 200	119	610.3
-15	53 310	12	16 550	39	6 033	66	2 512	93	1 169	120	596.1
-14	50 880	13	15 900	40	5 829	67	2 438	94	1 138		

Fahrenheit

T (°F)	R (Ω)	T (°F)	R (Ω)	T (°F)	R (Ω)	T (°F)	R (Ω)	T (°F)	R (Ω)	T (°F)	R (Ω)
-40.0	187 400	8.6	48 590	57.2	15 270	105.8	5 630	154.4	2 366	203.0	1 108
-38.2	177 500	10.4	46 410	59.0	14 680	107.6	5 440	156.2	2 296	204.8	1 080

T (°F)	R (Ω)	T (°F)	R (Ω)	T (°F)	R (Ω)	T (°F)	R (Ω)	T (°F)	R (Ω)	T (°F)	R (Ω)
-36.4	168 200	12.2	44 350	60.8	14 110	109.4	5 257	158.0	2 229	206.6	1 052
-34.6	159 400	14.0	42 390	62.6	13 570	111.2	5 081	159.8	2 164	208.4	1 025
-32.8	151 100	15.8	40 500	64.4	13 050	113.0	4 912	161.6	2 101	210.2	999.0
-31.0	143 400	17.6	38 700	66.2	12 560	114.8	4 750	163.4	2 040	212.0	973.7
-29.2	136 100	19.4	37 000	68.0	12 090	116.6	4 594	165.2	1 981	213.8	949.0
-27.4	129 200	21.2	35 380	69.8	11 630	118.4	4 444	167.0	1 925	215.6	925.0
-25.6	122 800	23.0	33 850	71.6	11 200	120.2	4 300	168.8	1 870	217.4	901.8
-23.8	116 700	24.8	32 390	73.4	10 780	122.0	4 162	170.6	1 817	219.2	879.3
-22.0	110 900	26.6	31 000	75.2	10 380	123.8	4 027	172.4	1 766	221.0	857.4
-20.2	105 400	28.4	29 690	77.0	10 000	125.6	3 897	174.2	1 716	222.8	836.3
-18.4	100 100	30.2	28 440	78.8	9 633	127.4	3 773	176.0	1 669	224.6	815.7
-16.6	95 220	32.0	27 250	80.6	9 281	129.2	3 653	177.8	1 622	226.4	795.8
-14.8	90 570	33.8	26 100	82.4	8 945	131.0	3 537	179.6	1 577	228.2	776.4
-13.0	86 180	35.6	25 000	84.2	8 623	132.8	3 426	181.4	1 534	230.0	757.6
-11.2	82 040	37.4	23 960	86.0	8 314	134.6	3 319	183.2	1 492	231.8	739.2
-9.4	78 130	39.2	22 970	87.8	8 016	136.4	3 216	185.0	1 451	233.6	721.4
-7.6	74 440	41.0	22 030	89.6	7 730	138.2	3 117	186.8	1 412	235.4	704.1
-5.8	70 940	42.8	21 130	91.4	7 456	140.0	3 022	188.6	1 374	237.2	687.3
-4.0	67 640	44.6	20 280	93.2	7 193	141.8	2 929	190.4	1 337	239.0	671.0
-2.2	64 440	46.4	19 460	95.0	6 941	143.6	2 839	192.2	1 301	240.8	655.2
-0.4	61 420	48.2	18 690	96.8	6 700	145.4	2 753	194.0	1 266	242.6	639.8
1.4	58 570	50.0	17 950	98.6	6 468	147.2	2 670	195.8	1 233	244.4	624.8
3.2	55 870	51.8	17 230	100.4	6 246	149.0	2 589	197.6	1 200	246.2	610.3
5.0	53 310	53.6	16 550	102.2	6 033	150.8	2 512	199.4	1 169	248.0	596.1
6.8	50 880	55.4	15 900	104.0	5 829	152.6	2 438	201.2	1 138		

NTC 10k-2 beta (25/50) 3977 Resistance Temperature Table

Celsius

T (°C)	R (Ω)	T (°C)	R (Ω)	T (°C)	R (Ω)	T (°C)	R (Ω)	T (°C)	R (Ω)	T (°C)	R (Ω)
-39.44	323 839	-18.33	88 090	2.78	28 365	23.89	10 501	45.00	4 367	66.11	2 003
-38.33	300 974	-17.22	82 670	3.89	26 834	25.00	10 000	46.11	4 182	67.22	1 927
-37.22	279 880	-16.11	77 620	5.00	25 395	26.11	9 526	47.22	4 006	68.33	1 855
-36.11	260 410	-15.00	72 911	6.11	24 042	27.22	9 078	48.33	3 838	69.44	1 785
-35.00	242 427	13.89	68 518	7.22	22 770	28.33	8 653	49.44	3 679	70.56	1 718
-33.89	225 809	12.78	64 419	8.33	21 573	29.44	8 251	50.56	3 525	71.67	1 655
-32.78	210 443	11.67	60 592	9.44	20 446	30.56	7 866	51.67	3 380	72.78	1 594
-31.67	196 227	10.56	57 017	10.56	19 376	31.67	7 505	52.78	3 242	73.89	1 536
-30.56	183 068	9.44	53 647	11.67	18 378	32.78	7 163	53.89	3 111	75.00	1 480
-29.44	170 775	8.33	50 526	12.78	17 437	33.89	6 838	55.00	2 985	76.11	1 427
-28.33	159 488	7.22	47 606	13.89	16 550	35.00	6 530	56.11	2 865	77.22	1 375
-27.22	149 024	6.11	44 874	15.00	15 714	36.11	6 238	57.22	2 751	78.33	1 326
-26.11	139 316	5.00	42 317	16.11	14 925	37.22	5 960	58.33	2 642	79.44	1 279
-25.00	130 306	3.89	39 921	17.22	14 180	38.33	5 697	59.44	2 538	80.56	1 234

T (°C)	R (Ω)	T (°C)	R (Ω)	T (°C)	R (Ω)	T (°C)	R (Ω)	T (°C)	R (Ω)	T (°C)	R (Ω)
-23.89	121 939	2.78	37 676	18.33	13 478	39.44	5 447	60.56	2 438	81.67	1 190
-22.78	114 165	1.67	35 573	19.44	12 814	40.56	5 207	61.67	2 343	82.78	1 149
-21.67	106 939	0.56	33 599	20.56	12 182	41.67	4 981	62.78	2 252	83.89	1 109
-20.56	100 218	0.56	31 732	21.67	11 590	42.78	4 766	63.89	2 165	85.00	1 070
-19.44	93 909	1.67	29 996	22.78	11 030	43.89	4 561	65.00	2 082	86.11	1 034

Fahrenheit

T (°F)	R (Ω)	T (°F)	R (Ω)	T (°F)	R (Ω)	T (°F)	R (Ω)	T (°F)	R (Ω)	T (°F)	R (Ω)
-39	323 839	-1	88 090	37	28 365	75	10 501	113	4 367	151	2 003
-37	300 974	1	82 670	39	26 834	77	10 000	115	4 182	153	1 927
-35	279 880	3	77 620	41	25 395	79	9 526	117	4 006	155	1 855
-33	260 410	5	72 911	43	24 042	81	9 078	119	3 838	157	1 785
-31	242 427	57	68 518	45	22 770	83	8 653	121	3 679	159	1 718
-29	225 809	55	64 419	47	21 573	85	8 251	123	3 525	161	1 655
-27	210 443	53	60 592	49	20 446	87	7 866	125	3 380	163	1 594
-25	196 227	51	57 017	51	19 376	89	7 505	127	3 242	165	1 536
-23	183 068	49	53 647	53	18 378	91	7 163	129	3 111	167	1 480
-21	170 775	47	50 526	55	17 437	93	6 838	131	2 985	169	1 427
-19	159 488	45	47 606	57	16 550	95	6 530	133	2 865	171	1 375
-17	149 024	43	44 874	59	15 714	97	6 238	135	2 751	173	1 326
-15	139 316	41	42 317	61	14 925	99	5 960	137	2 642	175	1 279
-13	130 306	39	39 921	63	14 180	101	5 697	139	2 538	177	1 234
-11	121 939	37	37 676	65	13 478	103	5 447	141	2 438	179	1 190
-9	114 165	35	35 573	67	12 814	105	5 207	143	2 343	181	1 149
-7	106 939	33	33 599	69	12 182	107	4 981	145	2 252	183	1 109
-5	100 218	33	31 732	71	11 590	109	4 766	147	2 165	185	1 070
-3	93 909	35	29 996	73	11 030	111	4 561	149	2 082	187	1 034

Pt1000 Resistance Temperature Table

Celsius

T (°C)	R (Ω)	T (°C)	R (Ω)	T (°C)	R (Ω)	T (°C)	R (Ω)	T (°C)	R (Ω)	T (°C)	R (Ω)
-100	602.56	-49	807.03	2	1007.81	53	1205.52	104	1400.22	155	1591.91
-99	606.61	-48	811.00	3	1011.72	54	1209.36	105	1404.00	156	1595.64
-98	610.66	-47	814.97	4	1015.62	55	1213.21	106	1407.79	157	1599.37
-97	614.71	-46	818.94	5	1019.53	56	1217.05	107	1411.58	158	1603.09
-96	618.76	-45	822.90	6	1023.43	57	1220.90	108	1415.36	159	1606.82
-95	622.80	-44	826.87	7	1027.33	58	1224.74	109	1419.14	160	1610.54
-94	626.84	-43	830.83	8	1031.23	59	1228.58	110	1422.93	161	1614.27
-93	630.88	-42	834.79	9	1035.13	60	1232.42	111	1426.71	162	1617.99
-92	634.92	-41	838.75	10	1039.03	61	1236.26	112	1430.49	163	1621.71
-91	638.96	-40	842.71	11	1042.92	62	1240.09	113	1434.26	164	1625.43

T (°C)	R (Ω)	T (°C)	R (Ω)	T (°C)	R (Ω)	T (°C)	R (Ω)	T (°C)	R (Ω)	T (°C)	R (Ω)
-90	643.00	-39	846.66	12	1046.82	63	1243.93	114	1438.04	165	1629.15
-89	647.03	-38	850.62	13	1050.71	64	1247.77	115	1441.82	166	1632.86
-88	651.06	-37	854.57	14	1054.60	65	1251.60	116	1445.59	167	1636.58
-87	655.09	-36	858.53	15	1058.49	66	1255.43	117	1449.37	168	1640.30
-86	659.12	-35	862.48	16	1062.38	67	1259.26	118	1453.14	169	1644.01
-85	663.15	-34	866.43	17	1066.27	68	1263.09	119	1456.91	170	1647.72
-84	667.17	-33	870.38	18	1070.16	69	1266.92	120	1460.68	171	1651.43
-83	671.20	-32	874.32	19	1074.05	70	1270.75	121	1464.45	172	1655.14
-82	675.22	-31	878.27	20	1077.94	71	1274.58	122	1468.22	173	1658.85
-81	679.24	-30	882.22	21	1081.82	72	1278.40	123	1471.98	174	1662.56
-80	683.25	-29	886.16	22	1085.70	73	1282.23	124	1475.75	175	1666.27
-79	687.27	-28	890.10	23	1089.59	74	1286.05	125	1479.51	176	1669.97
-78	691.29	-27	894.04	24	1093.47	75	1289.87	126	1483.28	177	1673.68
-77	695.30	-26	897.98	25	1097.35	76	1293.70	127	1487.04	178	1677.38
-76	699.31	-25	901.92	26	1101.23	77	1297.52	128	1490.80	179	1681.08
-75	703.32	-24	905.86	27	1105.10	78	1301.33	129	1494.56	180	1684.78
-74	707.33	-23	909.80	28	1108.98	79	1305.15	130	1498.32	181	1688.48
-73	711.34	-22	913.73	29	1112.86	80	1308.97	131	1502.08	182	1692.18
-72	715.34	-21	917.67	30	1116.73	81	1312.78	132	1505.83	183	1695.88
-71	719.34	-20	921.60	31	1120.60	82	1316.60	133	1509.59	184	1699.58
-70	723.35	-19	925.53	32	1124.47	83	1320.41	134	1513.34	185	1703.27
-69	727.35	-18	929.46	33	1128.35	84	1324.22	135	1517.10	186	1706.96
-68	731.34	-17	933.39	34	1132.21	85	1328.03	136	1520.85	187	1710.66
-67	735.34	-16	937.32	35	1136.08	86	1331.84	137	1524.60	188	1714.35
-66	739.34	-15	941.24	36	1139.95	87	1335.65	138	1528.35	189	1718.04
-65	743.33	-14	945.17	37	1143.82	88	1339.46	139	1532.10	190	1721.73
-64	747.32	-13	949.09	38	1147.68	89	1343.26	140	1535.84	191	1725.42
-63	751.31	-12	953.02	39	1151.55	90	1347.07	141	1539.59	192	1729.10
-62	755.30	-11	956.94	40	1155.41	91	1350.87	142	1543.33	193	1732.79
-61	759.29	-10	960.86	41	1159.27	92	1354.68	143	1547.08	194	1736.48
-60	763.28	-9	964.78	42	1163.13	93	1358.48	144	1550.82	195	1740.16
-59	767.26	-8	968.70	43	1166.99	94	1362.28	145	1554.56	196	1743.84
-58	771.25	-7	972.61	44	1170.85	95	1366.08	146	1558.30	197	1747.52
-57	775.23	-6	976.53	45	1174.70	96	1369.87	147	1562.04	198	1751.20
-56	779.21	-5	980.44	46	1178.56	97	1373.67	148	1565.78	199	1754.88
-55	783.19	-4	984.36	47	1182.41	98	1377.47	149	1569.52	200	1758.56
-54	787.17	-3	988.27	48	1186.27	99	1381.26	150	1573.25		
-53	791.14	-2	992.18	49	1190.12	100	1385.06	151	1576.99		
-52	795.12	-1	996.09	50	1193.97	101	1388.85	152	1580.72		
-51	799.09	0	1000.00	51	1197.82	102	1392.64	153	1584.45		
-50	803.06	1	1003.91	52	1201.67	103	1396.43	154	1588.18		

Fahrenheit

T (°F)	R (Ω)	T (°F)	R (Ω)	T (°F)	R (Ω)	T (°F)	R (Ω)	T (°F)	R (Ω)	T (°F)	R (Ω)
-148.0	602.56	-56.2	807.03	35.6	1007.81	127.4	1205.52	219.2	1400.22	311.0	1591.91
-146.2	606.61	-54.4	811.00	37.4	1011.72	129.2	1209.36	221.0	1404.00	312.8	1595.64
-144.4	610.66	-52.6	814.97	39.2	1015.62	131.0	1213.21	222.8	1407.79	314.6	1599.37
-142.6	614.71	-50.8	818.94	41.0	1019.53	132.8	1217.05	224.6	1411.58	316.4	1603.09
-140.8	618.76	-49.0	822.90	42.8	1023.43	134.6	1220.90	226.4	1415.36	318.2	1606.82
-139.0	622.80	-47.2	826.87	44.6	1027.33	136.4	1224.74	228.2	1419.14	320.0	1610.54
-137.2	626.84	-45.4	830.83	46.4	1031.23	138.2	1228.58	230.0	1422.93	321.8	1614.27
-135.4	630.88	-43.6	834.79	48.2	1035.13	140.0	1232.42	231.8	1426.71	323.6	1617.99
-133.6	634.92	-41.8	838.75	50.0	1039.03	141.8	1236.26	233.6	1430.49	325.4	1621.71
-131.8	638.96	-40.0	842.71	51.8	1042.92	143.6	1240.09	235.4	1434.26	327.2	1625.43
-130.0	643.00	-38.2	846.66	53.6	1046.82	145.4	1243.93	237.2	1438.04	329.0	1629.15
-128.2	647.03	-36.4	850.62	55.4	1050.71	147.2	1247.77	239.0	1441.82	330.8	1632.86
-126.4	651.06	-34.6	854.57	57.2	1054.60	149.0	1251.60	240.8	1445.59	332.6	1636.58
-124.6	655.09	-32.8	858.53	59.0	1058.49	150.8	1255.43	242.6	1449.37	334.4	1640.30
-122.8	659.12	-31.0	862.48	60.8	1062.38	152.6	1259.26	244.4	1453.14	336.2	1644.01
-121.0	663.15	-29.2	866.43	62.6	1066.27	154.4	1263.09	246.2	1456.91	338.0	1647.72
-119.2	667.17	-27.4	870.38	64.4	1070.16	156.2	1266.92	248.0	1460.68	339.8	1651.43
-117.4	671.20	-25.6	874.32	66.2	1074.05	158.0	1270.75	249.8	1464.45	341.6	1655.14
-115.6	675.22	-23.8	878.27	68.0	1077.94	159.8	1274.58	251.6	1468.22	343.4	1658.85
-113.8	679.24	-22.0	882.22	69.8	1081.82	161.6	1278.40	253.4	1471.98	345.2	1662.56
-112.0	683.25	-20.2	886.16	71.6	1085.70	163.4	1282.23	255.2	1475.75	347.0	1666.27
-110.2	687.27	-18.4	890.10	73.4	1089.59	165.2	1286.05	257.0	1479.51	348.8	1669.97
-108.4	691.29	-16.6	894.04	75.2	1093.47	167.0	1289.87	258.8	1483.28	350.6	1673.68
-106.6	695.30	-14.8	897.98	77.0	1097.35	168.8	1293.70	260.6	1487.04	352.4	1677.38
-104.8	699.31	-13.0	901.92	78.8	1101.23	170.6	1297.52	262.4	1490.80	354.2	1681.08
-103.0	703.32	-11.2	905.86	80.6	1105.10	172.4	1301.33	264.2	1494.56	356.0	1684.78
-101.2	707.33	-9.4	909.80	82.4	1108.98	174.2	1305.15	266.0	1498.32	357.8	1688.48
-99.4	711.34	-7.6	913.73	84.2	1112.86	176.0	1308.97	267.8	1502.08	359.6	1692.18
-97.6	715.34	-5.8	917.67	86.0	1116.73	177.8	1312.78	269.6	1505.83	361.4	1695.88
-95.8	719.34	-4.0	921.60	87.8	1120.60	179.6	1316.60	271.4	1509.59	363.2	1699.58
-94.0	723.35	-2.2	925.53	89.6	1124.47	181.4	1320.41	273.2	1513.34	365.0	1703.27
-92.2	727.35	-0.4	929.46	91.4	1128.35	183.2	1324.22	275.0	1517.10	366.8	1706.96
-90.4	731.34	1.4	933.39	93.2	1132.21	185.0	1328.03	276.8	1520.85	368.6	1710.66
-88.6	735.34	3.2	937.32	95.0	1136.08	186.8	1331.84	278.6	1524.60	370.4	1714.35
-86.8	739.34	5.0	941.24	96.8	1139.95	188.6	1335.65	280.4	1528.35	372.2	1718.04
-85.0	743.33	6.8	945.17	98.6	1143.82	190.4	1339.46	282.2	1532.10	374.0	1721.73
-83.2	747.32	8.6	949.09	100.4	1147.68	192.2	1343.26	284.0	1535.84	375.8	1725.42
-81.4	751.31	10.4	953.02	102.2	1151.55	194.0	1347.07	285.8	1539.59	377.6	1729.10
-79.6	755.30	12.2	956.94	104.0	1155.41	195.8	1350.87	287.6	1543.33	379.4	1732.79
-77.8	759.29	14.0	960.86	105.8	1159.27	197.6	1354.68	289.4	1547.08	381.2	1736.48
-76.0	763.28	15.8	964.78	107.6	1163.13	199.4	1358.48	291.2	1550.82	383.0	1740.16
-74.2	767.26	17.6	968.70	109.4	1166.99	201.2	1362.28	293.0	1554.56	384.8	1743.84
-72.4	771.25	19.4	972.61	111.2	1170.85	203.0	1366.08	294.8	1558.30	386.6	1747.52
-70.6	775.23	21.2	976.53	113.0	1174.70	204.8	1369.87	296.6	1562.04	388.4	1751.20
-68.8	779.21	23.0	980.44	114.8	1178.56	206.6	1373.67	298.4	1565.78	390.2	1754.88

T (°F)	R (Ω)	T (°F)	R (Ω)	T (°F)	R (Ω)	T (°F)	R (Ω)	T (°F)	R (Ω)	T (°F)	R (Ω)
-67.0	783.19	24.8	984.36	116.6	1182.41	208.4	1377.47	300.2	1569.52	392.0	1758.56
-65.2	787.17	26.6	988.27	118.4	1186.27	210.2	1381.26	302.0	1573.25		
-63.4	791.14	28.4	992.18	120.2	1190.12	212.0	1385.06	303.8	1576.99		
-61.6	795.12	30.2	996.09	122.0	1193.97	213.8	1388.85	305.6	1580.72		
-59.8	799.09	32.0	1000.00	123.8	1197.82	215.6	1392.64	307.4	1584.45		
-58.0	803.06	33.8	1003.91	125.6	1201.67	217.4	1396.43	309.2	1588.18		

PTC Resistance Temperature Table

Celsius

T (°C)	R (Ω)	T (°C)	R (Ω)	T (°C)	R (Ω)	T (°C)	R (Ω)	T (°C)	R (Ω)	T (°C)	R (Ω)
-55	490.10	-14	718.2	27	1008.60	68	1361.4	109	1776.3	150	2189.00
-54	494.88	-13	724.48	28	1016.48	69	1370.88	110	1786.98		
-53	499.75	-12	730.85	29	1024.35	70	1380.25	111	1797.95		
-52	504.63	-11	737.33	30	1032.33	71	1389.73	112	1808.93		
-51	509.60	-10	743.70	31	1040.30	72	1399.20	113	1819.90		
-50	514.58	-9	750.28	32	1048.28	73	1408.78	114	1830.88		
-49	519.55	-8	756.35	33	1056.35	74	1418.35	115	1841.85		
-48	524.63	-7	763.33	34	1064.43	75	1427.93	116	1852.83		
-47	529.70	-6	769.9	35	1072.60	76	1437.60	117	1863.80		
-46	534.78	-5	776.58	36	1080.68	77	1447.28	118	1874.78		
-45	539.96	-4	783.26	37	1088.96	78	1456.96	119	1885.76		
-44	545.13	-3	789.93	38	1097.13	79	1466.73	120	1896.73		
-43	550.41	-2	796.71	39	1105.41	80	1476.51	121	1907.51		
-42	555.68	-1	803.48	40	1113.78	81	1486.38	122	1918.28		
-41	560.96	0	810.36	41	1122.06	82	1496.26	123	1929.06		
-40	566.23	1	817.23	42	1130.43	83	1506.13	124	1939.83		
-39	571.61	2	824.11	43	1138.91	84	1516.11	125	1950.61		
-38	577.09	3	830.99	44	1147.39	85	1526.09	126	1961.19		
-37	582.56	4	837.96	45	1155.86	86	1536.06	127	1971.76		
-36	588.04	5	845.04	46	1164.34	87	1546.14	128	1982.34		
-35	593.51	6	852.01	47	1172.91	88	1556.21	129	1992.91		
-34	599.09	7	859.09	48	1181.59	89	1566.29	130	2003.49		
-33	604.66	8	866.26	49	1190.16	90	1576.46	131	2013.46		
-32	610.34	9	873.44	50	1198.84	91	1586.74	132	2023.44		
-31	616.01	10	880.61	51	1207.61	92	1596.91	133	2033.41		
-30	621.69	11	887.89	52	1216.29	93	1607.19	134	2043.39		
-29	627.47	12	895.07	53	1225.17	94	1617.57	135	2053.37		
-28	633.24	13	902.44	54	1233.94	95	1627.84	136	2063.34		
-27	639.12	14	909.72	55	1242.82	96	1638.22	137	2073.32		
-26	644.89	15	917.19	56	1251.69	97	1648.69	138	2083.29		
-25	650.87	16	924.57	57	1260.67	98	1659.17	139	2093.27		
-24	656.74	17	932.04	58	1269.64	99	1669.64	140	2103.24		

T (°C)	R (Ω)	T (°C)	R (Ω)	T (°C)	R (Ω)	T (°C)	R (Ω)	T (°C)	R (Ω)	T (°C)	R (Ω)
-23	662.72	18	939.52	59	1278.62	100	1680.22	141	2111.82		
-22	668.80	19	947.00	60	1287.70	101	1690.90	142	2120.40		
-21	674.77	20	954.57	61	1296.77	102	1701.57	143	2128.97		
-20	680.85	21	962.25	62	1305.95	103	1712.25	144	2137.55		
-19	687.02	22	969.82	63	1315.12	104	1722.92	145	2146.12		
-18	693.20	23	977.50	64	1324.30	105	1733.60	146	2154.70		
-17	699.37	24	985.27	65	1333.47	106	1744.27	147	2163.27		
-16	705.55	25	993.05	66	1342.75	107	1754.95	148	2171.85		
-15	711.82	26	1000.82	67	1352.12	108	1765.62	149	2180.42		

Fahrenheit

T (°F)	R (Ω)	T (°F)	R (Ω)	T (°F)	R (Ω)	T (°F)	R (Ω)	T (°F)	R (Ω)	T (°F)	R (Ω)
-67	490.10	6.8	718.2	80.6	1008.60	154.4	1361.4	228.2	1776.3	302	2189.00
-65.2	494.88	8.6	724.48	82.4	1016.48	156.2	1370.88	230	1786.98		
-63.4	499.75	10.4	730.85	84.2	1024.35	158	1380.25	231.8	1797.95		
-61.6	504.63	12.2	737.33	86	1032.33	159.8	1389.73	233.6	1808.93		
-59.8	509.60	14	743.70	87.8	1040.30	161.6	1399.20	235.4	1819.90		
-58	514.58	15.8	750.28	89.6	1048.28	163.4	1408.78	237.2	1830.88		
-56.2	519.55	17.6	756.35	91.4	1056.35	165.2	1418.35	239	1841.85		
-54.4	524.63	19.4	763.33	93.2	1064.43	167	1427.93	240.8	1852.83		
-52.6	529.70	21.2	769.9	95	1072.60	168.8	1437.60	242.6	1863.80		
-50.8	534.78	23	776.58	96.8	1080.68	170.6	1447.28	244.4	1874.78		
-49	539.96	24.8	783.26	98.6	1088.96	172.4	1456.96	246.2	1885.76		
-47.2	545.13	26.6	789.93	100.4	1097.13	174.2	1466.73	248	1896.73		
-45.4	550.41	28.4	796.71	102.2	1105.41	176	1476.51	249.8	1907.51		
-43.6	555.68	30.2	803.48	104	1113.78	177.8	1486.38	251.6	1918.28		
-41.8	560.96	32	810.36	105.8	1122.06	179.6	1496.26	253.4	1929.06		
-40	566.23	33.8	817.23	107.6	1130.43	181.4	1506.13	255.2	1939.83		
-38.2	571.61	35.6	824.11	109.4	1138.91	183.2	1516.11	257	1950.61		
-36.4	577.09	37.4	830.99	111.2	1147.39	185	1526.09	258.8	1961.19		
-34.6	582.56	39.2	837.96	113	1155.86	186.8	1536.06	260.6	1971.76		
-32.8	588.04	41	845.04	114.8	1164.34	188.6	1546.14	262.4	1982.34		
-31	593.51	42.8	852.01	116.6	1172.91	190.4	1556.21	264.2	1992.91		
-29.2	599.09	44.6	859.09	118.4	1181.59	192.2	1566.29	266	2003.49		
-27.4	604.66	46.4	866.26	120.2	1190.16	194	1576.46	267.8	2013.46		
-25.6	610.34	48.2	873.44	122	1198.84	195.8	1586.74	269.6	2023.44		
-23.8	616.01	50	880.61	123.8	1207.61	197.6	1596.91	271.4	2033.41		
-22	621.69	51.8	887.89	125.6	1216.29	199.4	1607.19	273.2	2043.39		
-20.2	627.47	53.6	895.07	127.4	1225.17	201.2	1617.57	275	2053.37		
-18.4	633.24	55.4	902.44	129.2	1233.94	203	1627.84	276.8	2063.34		
-16.6	639.12	57.2	909.72	131	1242.82	204.8	1638.22	278.6	2073.32		
-14.8	644.89	59	917.19	132.8	1251.69	206.6	1648.69	280.4	2083.29		
-13	650.87	60.8	924.57	134.6	1260.67	208.4	1659.17	282.2	2093.27		
-11.2	656.74	62.6	932.04	136.4	1269.64	210.2	1669.64	284	2103.24		

T (°F)	R (Ω)	T (°F)	R (Ω)	T (°F)	R (Ω)	T (°F)	R (Ω)	T (°F)	R (Ω)	T (°F)	R (Ω)
-9.4	662.72	64.4	939.52	138.2	1278.62	212	1680.22	285.8	2111.82		
-7.6	668.80	66.2	947.00	140	1287.70	213.8	1690.90	287.6	2120.40		
-5.8	674.77	68	954.57	141.8	1296.77	215.6	1701.57	289.4	2128.97		
-4	680.85	69.8	962.25	143.6	1305.95	217.4	1712.25	291.2	2137.55		
-2.2	687.02	71.6	969.82	145.4	1315.12	219.2	1722.92	293	2146.12		
-0.6	693.20	73.4	977.50	147.2	1324.30	221	1733.60	294.8	2154.70		
1.4	699.37	75.2	985.27	149	1333.47	222.8	1744.27	296.6	2163.27		
3.2	705.55	77	993.05	150.8	1342.75	224.6	1754.95	298.4	2171.85		
5	711.82	78.8	1000.82	152.6	1352.12	226.6	1765.62	300.2	2180.42		

Glossary

A

ADC:

(*analog/digital converter*)

AFB:

(*application function block*)

analog input:

Converts received voltage or current levels into numerical values. You can store and process these values within the logic controller.

analog output:

Converts numerical values within the logic controller and sends out proportional voltage or current levels.

application:

A program including configuration data, symbols, and documentation.

AWG:

(*American wire gauge*) The standard that specifies wire section sizes in North America.

B

BIOS:

(*basic input output system*) Part of the firmware used during the booting process.

BOOL:

(*boolean*) A basic data type in computing. A `BOOL` variable can have one of these values: 0 (`FALSE`), 1 (`TRUE`). A bit that is extracted from a word is of type `BOOL`.

byte:

A type that is encoded in an 8-bit format, ranging from 00 hex to FF hex.

C

controller:

Automates industrial processes (also known as programmable logic controller or programmable controller).

COP:

(*Coefficient Of Performance*) It is a ratio of cooling provided to work required.

CSA:

(*Canadian standards association*) The Canadian standard for industrial electronic equipment in hazardous environments.

D

digital I/O:

(*digital input/output*) An individual circuit connection at the electronic module that corresponds directly to a data table bit. The data table bit holds the value of the signal at the I/O circuit. It gives the control logic digital access to I/O values.

DWORD:

(*double word*) Encoded in 32-bit format.

E

EEPROM:

(*electrically erasable programmable read-only memory*) A type of non-volatile memory to store required data even when power is removed.

EIA:

(*electronic industries alliance*) The trade organization for establishing electrical/electronic and data communication standards (including RS-232 and RS-485) in the United States.

EMC:

(*electromagnetic compatibility*)

EN:

EN identifies one of many European standards maintained by CEN (*European Committee for Standardization*), CENELEC (*European Committee for Electrotechnical Standardization*), or ETSI (*European Telecommunications Standards Institute*).

expansion bus:

An electronic communication bus between expansion I/O modules and a controller.

expansion I/O module:

(*expansion input/output module*) Either a digital or analog module that adds additional I/O to the base controller.

F

FE:

(functional Earth) A common grounding connection to enhance or otherwise allow normal operation of electrically sensitive equipment (also referred to as functional ground in North America).

In contrast to a protective Earth (protective ground), a functional earth connection serves a purpose other than shock protection, and may normally carry current. Examples of devices that use functional earth connections include surge suppressors and electromagnetic interference filters, certain antennas, and measurement instruments.

firmware:

Represents the BIOS, data parameters, and programming instructions that constitute the operating system on a controller. The firmware is stored in non-volatile memory within the controller.

FLA:

(Full-Load Amperes) Amount of current drawn by the motor at rated load and rated voltage.

flash memory:

A non-volatile memory that can be overwritten. It is stored on a special EEPROM that can be erased and reprogrammed.

H

hex:

(*hexadecimal*)

HVAC&R:

(*heating, ventilation, and air conditioning and refrigeration)*

HVAC:

(*heating, ventilation, and air conditioning)* Applications to monitor and control indoor environments.

I

I/O terminal:

(*input/output terminal*) A collection of connection points between the field wiring and the I/O modules or those integrated into the controller.

I/O:

(*input/output*)

ID:

(*identifier/identification*)

IEC 61131-3:

Part 3 of a 3-part IEC standard for industrial automation equipment. IEC 61131-3 is concerned with controller programming languages and defines 2 graphical and 2 textual programming language standards. The graphical programming languages are ladder diagram and function block diagram. The textual programming languages include structured text and instruction list.

IEC:

(*international electrotechnical commission*) A non-profit and non-governmental international standards organization that prepares and publishes international standards for electrical, electronic, and related technologies.

input terminal:

A collection of connection points between the field wiring and the I/O modules or those integrated into the controller.

IP 20:

(*ingress protection*) The protection classification according to IEC 60529 offered by an enclosure, shown by the letter IP and 2 digits. The first digit indicates 2 factors: helping protect persons and for equipment. The second digit indicates helping protect against water. IP 20 devices help protect against electric contact of objects larger than 12.5 mm, but not against water.

L

LCD:

(*liquid crystal display* Used in many HMI devices to display menus and messages to machine operators.

LED:

(*light emitting diode*) An indicator that illuminates under a low-level electrical charge.

LRA:

(*Locked-Rotor Amperes*) Amount of current drawn by the motor at rated voltage while its rotor is locked. This provides an indication of the inrush current during start-up.

M

Machine Expert HVAC:

A comprehensive controller development system software tool for configuring and programming the Modicon M17x logic controller and devices compliant with IEC 61131-3.

Modbus SL:

(*Modbus serial line* The implementation of the protocol over a RS-232 or RS-485 serial connection.

Modbus:

The protocol that allows communications between many devices connected to the same network.

ms:

(*millisecond*)

N

N/A:

(*not applicable*)

N/C:

(*normally closed*) A contact pair that closes when the actuator is de-energized (no power is applied) and opens when the actuator is energized (power is applied).

NAK:

(*negative acknowledge*)

NC:

(*not connected*)

NEMA:

(*national electrical manufacturers association*) The standard for the performance of various classes of electrical enclosures. The NEMA standards cover corrosion resistance, ability to help protect from rain, submersion, and so on. For IEC member countries, the IEC 60529 standard classifies the ingress protection rating for enclosures.

network:

A system of interconnected devices that share a common data path and protocol for communications.

non-volatile memory:

A memory that can be overwritten. It is stored on a special EEPROM that can be erased and reprogrammed.

N/O:

(*normally open*) A contact pair that opens when the actuator is de-energized (no power is applied) and closes when the actuator is energized (power is applied).

NTC:

(*Negative Temperature Coefficient*)

O

output terminal:

A collection of connection points between the field wiring and the I/O modules or those integrated into the controller.

P

PE:

(*Protective Earth*) A common grounding connection to help avoid the hazard of electric shock by keeping any exposed conductive surface of a device at earth potential. To avoid possible voltage drop, no current is allowed to flow in this conductor (also referred to as *protective ground* in North America or as an equipment grounding conductor in the US national electrical code).

PLC:

(*programmable logic controller*) An industrial computer used to automate manufacturing, industrial, and other electromechanical processes. PLCs are different from common computers in that they are designed to have multiple input and output arrays and adhere to more robust specifications for shock, vibration, temperature, and electrical interference among other things.

power supply terminals:

The power supply is connected to these terminals to provide power to the controller.

PPM:

(*Pulse-Position Modulation*)

protocol:

A convention or standard definition that controls or enables the connection, communication, and data transfer between 2 computing system and devices.

Pt1000:

(*platinum 1000*) Resistance thermometers, also referred to as resistance temperature detectors, are sensors used to measure temperature by correlating electrical resistance with temperature. As the temperature changes, the resistance to an electrical current passing through them predictably changes likewise. They are characterized by their nominal resistance R0 at a temperature of 0 °C.

- Pt1000 (R0 = 1 kΩ)

PTC:

(*Positive Temperature Coefficient*)

PWM:

(*pulse width modulation*) A fast output that oscillates between off and on in an adjustable duty cycle, producing a rectangular wave form (though you can adjust it to produce a square wave). The PWM is well adapted to simulate or approximate an analog output in that it regulates the voltage of the output over its period making it useful in light dimming or speed control applications, among others.

R

RS-485:

A standard type of serial communication bus, based on 2 wires (also known as EIA RS-485).

RTC:

(*real-time clock*) A battery-backed time-of-day and calender clock that operates continuously, even when the controller is not powered for the life of the battery.

RTU:

(*remote terminal unit*) A device that interfaces with objects in the physical world to a distributed control system or SCADA system by transmitting telemetry data to the system and/or altering the state of connected objects based on control messages received from the system.

S

SELV:

(*safety extra low voltage*) A system that follows IEC 61140 guidelines for power supplies is protected in such a way that voltage between any 2 accessible parts (or between 1 accessible part and the PE terminal for class 1 equipment) does not exceed a specified value under normal conditions or under inoperable conditions.

server/client:

The single direction of control in a network that implements the server/client mode.

sink input:

A wiring arrangement in which the device provides current to the input electronic module. A sink input is referenced to 0 Vdc.

SL:

(*serial line*)

SPDT:

(*single-pole, double-throw*)

SPST:

(*single-pole, single-throw*)

SSR:

(*solid-state relay*)

STOP:

A command that causes the controller to stop running an application program.

T

terminal block:

(*terminal block*) The component that mounts in an electronic module and provides electrical connections between the controller and the field devices.

U

UL:

(*underwriters laboratories*) A US organization for product testing and safety certification.

V

variable:

A memory unit that is addressed and modified by a program.

W

WORD:

A type encoded in a 16-bit format.

Index

C

CAN expansion bus 91
Communication 91

M

M173O 16
Maximum Hardware Configuration 23
Memory 97
Modicon M173 Optimized Logic Controller 16

P

Power Supply 74

R

RS-485 Serial Ports 93
RTC 98

S

Specifications
  Controller and Expansion Modules 48
  Display 101

T

TM172AP12PM 20
TM172E12R 69
TM172E28R 71
TM173ASCTB22 20
TM173DLED 102
TM173OBM22R 53
TM173OBM22RH 64
TM173ODEM22R 61
TM173ODM15R 50
TM173ODM22R 56
TM173ODM22RH / TM173ODM22SH 66
TM173ODM22S 56
TM173OFM22R 59
TM173OFM22S 59

U

USB Serial Port 95

www.se.com

As standards, specifications, and design change from time to time, please ask for confirmation of the information given in this publication.

© 2026 Schneider Electric. All rights reserved.

EIO0000005114.04