Product data sheet

Specifications

Expansion module, Modicon M171/ M172/M173, optimized 15 IO

TM171EO15R

Main

Range of product	Modicon M171/M172
Product or component type	Additional I/O module
Product specific application	HVAC and pumping solution
Total inputs/outputs	15
Discrete input number	6
Discrete output number	1 for open collector 3 for relay outputs SPST with same common
Discrete output current	2 A for relay
Analogue input number	3 analog input NTC
Analogue output number	1 PWM/PPM, range: 20 kHz, 12 V, 35 mA 2

Complementary

Number of port	1 LAN expansion bus
Input/output number	3 analog input(s) 2 analog output(s) 6 digital input(s) 4 digital output(s)
Discrete input logic	Sink or source (positive/negative)
Contacts usage	Volt-free contacts
Analogue input type	voltage 0...5 V (ratiometric) voltage 0...10 V NTC temperature probe - 50...100 °C - resolution: 0.1 °C current 0...20 mA/4...20 mA voltage 0...1 V
Sensor power supply	12 V DC at 85 mA
[Us] rated supply voltage	12...24 V +/- 20 % AC/DC 24 V +/- 20 % DC
Power consumption in W	18 W at 24...48 V AC/DC
Realtime clock	Built-in clock at -10…55 °C
Display type	Without display
Overvoltage category	II
Local signalling	1 LED (red) for programmable 1 LED (yellow) for programmable 1 LED (green) for programmable
Width	140 mm
Height	110 mm

Disclaimer: This documentation is not intended as a substitute for and is not to be used for determining suitability or reliability of these products for specific user applications

Depth	61.6 mm
Net weight	0.385 kg

Environment

Directives	2006/95/EC - low voltage directive 86/188/EEC - physical agents (noise) directive
Standards	EN/IEC 60730
Product certifications	cURus EAC CSA CE
Ambient air temperature for operation	-10…55 °C conforming to UL 60730-1
Ambient air temperature for storage	-20…85 °C
Relative humidity	10…90 % non-condensing
IP degree of protection	IP20
Pollution degree	2

Packing Units

Unit Type of Package 1	PCE
Number of Units in Package 1	1
Package 1 Height	13.0 cm
Package 1 Width	9.1 cm
Package 1 Length	18.5 cm
Package 1 Weight	260.0 g
Unit Type of Package 2	S02
Number of Units in Package 2	6
Package 2 Height	15.0 cm
Package 2 Width	30.0 cm
Package 2 Length	40.0 cm
Package 2 Weight	1.891 kg

Environmental Data

Schneider Electric aims to achieve Net Zero status by 2050 through supply chain partnerships, lower impact materials, and circularity via our ongoing “Use Better, Use Longer, Use Again” campaign to extend product lifetimes and recyclability.

Environmental Data explained >

How we assess product sustainability >

Environmental footprint

Total lifecycle Carbon footprint	138
Environmental Disclosure	Product Environmental Profile

Use Better

Materials and Substances

Packaging made with recycled cardboard	Yes
Packaging without single use plastic	Yes
EU RoHS Directive	Pro-active compliance (Product out of EU RoHS legal scope)
REACh Regulation	REACh Declaration
California proposition 65	WARNING: This product can expose you to chemicals including: Lead and lead compounds, which is known to the State of California to cause cancer and birth defects or other reproductive harm. For more information go to www.P65Warnings.ca.gov

Use Again

Repack and remanufacture

End of life manual availability	End of Life Information
Take-back	No
WEEE Label	The product must be disposed on European Union markets following specific waste collection and never end up in rubbish bins

Dimensions Drawings

Dimensions

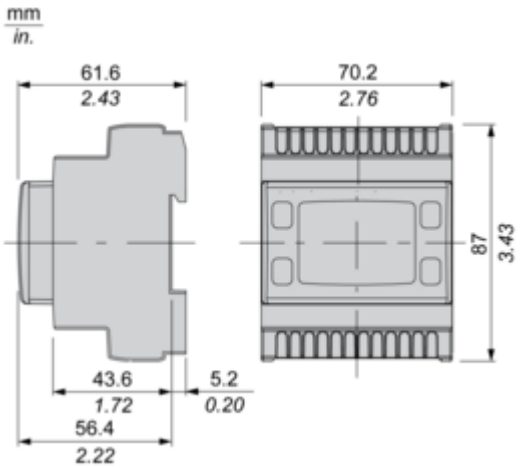

Mounting and Clearance

Mounting and Clearance

Clearance

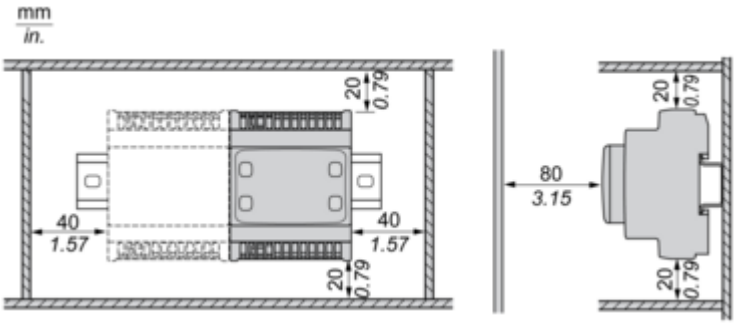

Misplacement

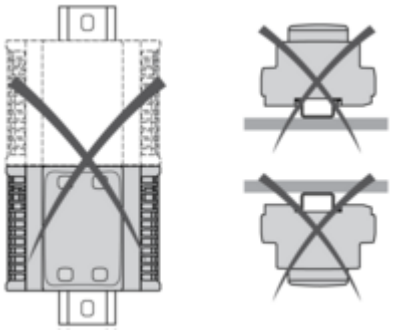

Connections and Schema

Power Supply

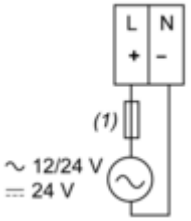

(1) Type T fuse (Controller: 1.25 A , Expansion: 1 A)

Wiring Diagram

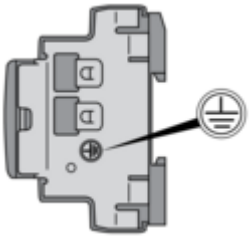

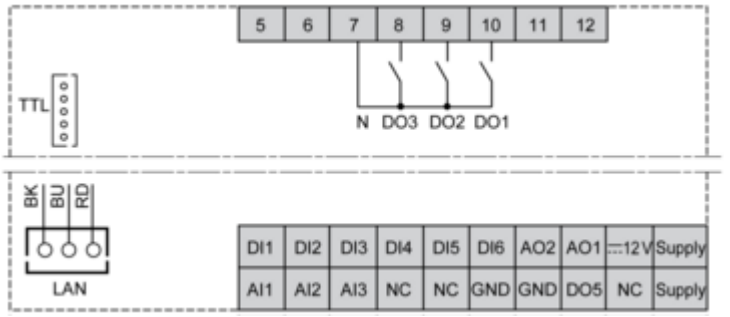

N : Neutral
GND : Ground
BK : Black
BU : Blue
RD : Red
AI : Analogue input
AO : Analogue output
DI : Digital input
DO : Digital output
NC : No Connection