Catalog | October 2020

Lexium SH3, MH3, SHS

Servo motors for **Lexium** 62 and **Lexium** 52 servo drives

schneider-electric.com

Life Is On | Schneider Electric

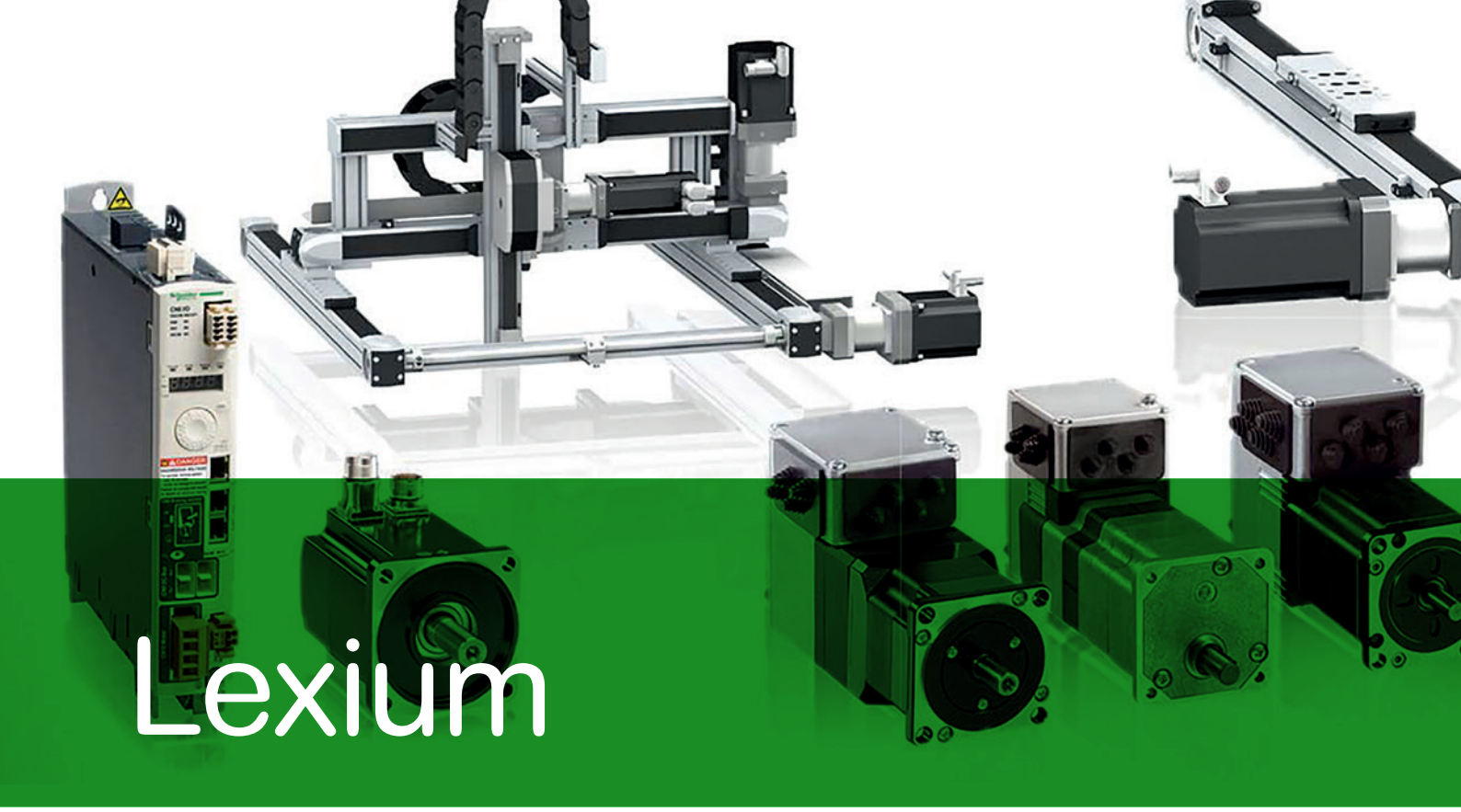

Lexium

Discover Lexium

Advanced motion control and robotics

Lexium servo drives, motors, and robotics series are designed for a broad range of motion-centric machines. From single-axis to high-performance multi-axis machines, the **Lexium** range enables high-speed movements and precise positioning in packaging, material handling, material working, electronics, and food and beverage applications.

Explore our offer

- **Lexium** Servo Drives and Motors
- **Lexium** Integrated Servo Drives
- **Lexium** Robotics
- **Lexium** Stepper Drives

Life Is On | Schneider Electric

Quick access to product information

Get technical information about your product

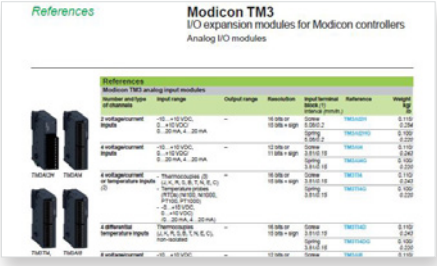

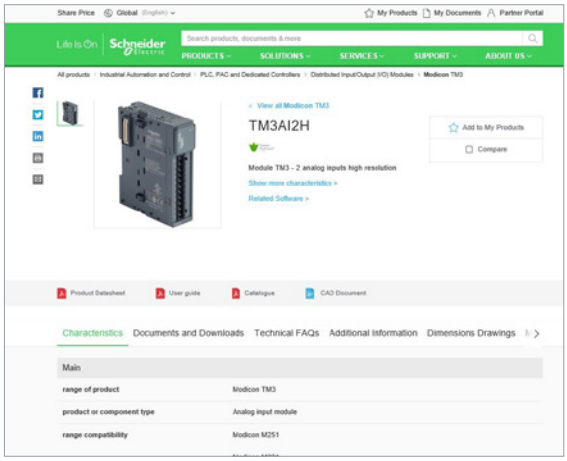

Each commercial reference presented in a catalog contains a hyperlink. Click on it to obtain the technical information of the product:

- Characteristics, Dimensions and drawings, Mounting and clearance, Connections and schemas, Performance curves
- Product image, Instruction sheet, User guide, Product certifications, End of life manual

Find your catalog

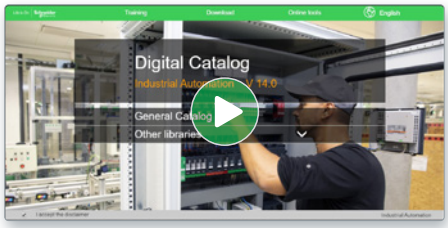

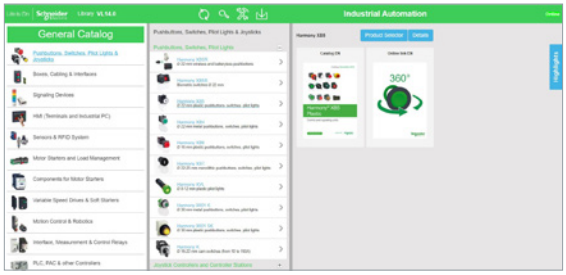

> With just 3 clicks, you can access the Industrial Automation and Control catalogs, in both English and French

> Consult digital automation catalogs at Digi-Cat Online

- Up-to-date catalogs
- Embeded product selectors,360° pictures
- Optimized search by commercial references

Select your training

> Find the right Training for your needs on our Global website

> Locate the training center with the selector tool, using this link

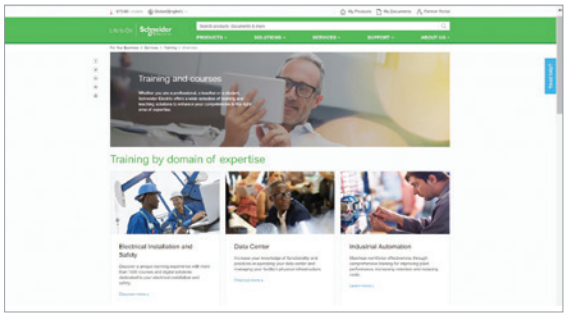

Life Is On | Schneider Electric

General content

Lexium SH3/MH3/SHS
Servo motors for Lexium 62 and Lexium 52 servo drives

■ **Lexium SH3 servo motors**
□ Presentation ..... *page 2*
□ Description ..... *page 3*
□ References, Dimensions ..... *page 4*
□ Characteristics ..... *page 5*
□ Combinations: Lexium SH3 servo motor and ...
- Lexium 62 servo drive ..... *page 6*
- Lexium 52 servo drive ..... *page 7*
- Lexium 62 ILD detached servo drive ..... *page 7*

■ **Lexium MH3 servo motors**
□ Presentation ..... *page 8*
□ Description ..... *page 9*
□ References, Dimensions ..... *page 9*
□ Characteristics ..... *pages 9 and 10*
□ Combinations: Lexium MH3 servo motor and...
- Lexium 62 servo drive ..... *page 10*
- Lexium 52 servo drive ..... *page 11*
- Lexium 62 ILD detached servo drive ..... *page 11*

■ **Connection elements for Lexium SH3 and Lexium MH3 servo motors**
□ One-Motor Cable connectivity
- Cable selection by motor power class ..... *page 12*
- Hybrid cables ..... *page 12*
- Hybrid cable extensions ..... *page 12*

□ Two-Motor Cable connectivity
- Cable selection by motor power class ..... *page 13*
- Motor cables ..... *page 13*
- Encoder cables ..... *page 14*

□ Connection description
- Hybrid cables for SH3 servo motors ..... *page 15*
- Motor cables, Encoder cables for SH3 and MH3 servo motors ..... *page 15*

□ IP 67 conformity kits for Lexium MH3 servo motors ..... *page 15*

■ **Lexium SHS stainless steel servo motors**
□ Presentation ..... *page 16*
□ References, Dimensions ..... *page 17*
□ Combination: Lexium SHS servo motor and ...
- Lexium 62 servo drive ..... *page 17*
- Lexium 52 servo drive ..... *page 17*

■ **Connection elements for Lexium SHS servo motors**
(One-Motor Cable connectivity)
- References ..... *page 18*
- Description ..... *page 18*

■ **Options**
- Holding Brake for Lexium servo motors ..... *page 19*
- Encoder for Lexium servo motors ..... *page 19*
- Planetary gearboxes ..... *page 19*

■ **Index** ..... *page 20*

Lexium SH3/MH3/SHS

Servo motors for Lexium 62 and Lexium 52 servo drives

Lexium SH3 servo motors

SH3070●●●●●3●●●, SH3070●●●●●4●●● (1),
SH3100●●●●●3●●●, SH3100●●●●●4●●● (1)
One-Motor Cable connectivity

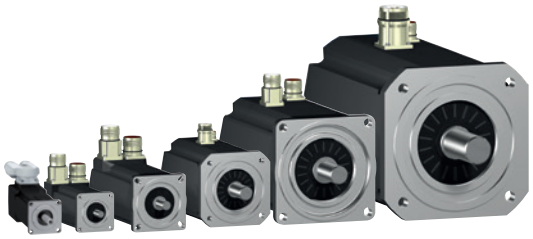

SH040, SH3055, SH3070, SH3100, SH3140, SH3205
Two-Motor Cable connectivity

Presentation

Lexium SH3 servo motors are an excellent solution to the need for dynamic performance, covering a continuous stall torque range from 0.2 to 94.4 Nm (*0.15 to 69.62 lbf ft*) for speeds up to 9,000 rpm.
Thanks to their new winding technology based on salient poles, Lexium SH3 servo motors are far more compact and offer a higher power density than conventional servo motors.
Lexium SH3 servo motors are UL Recognized and conform to UL1004 as well as European directives (CE marking).
They are available with the following variants:

- 6 flange sizes: 40, 55, 70, 100, 140 and 205 mm *(1.57, 2.28, 2.76, 3.94, 5.51, and 8.071 in.)*
- 2 degrees of protection for the shaft end:
  - IP 54 or IP 65 in accordance with IEC/EN 60529
  - The degree of protection provided by the casing is IP 65 (IP 67 with the conformity kit, which is available as an option).
- With or without holding brake
- Integrated single-turn or multi-turn Hiperface® SinCos encoder (medium or high resolution)
- Two types of connectors are available on motors: angular or straight connectors
- Smooth or keyed shaft end

Flexible connectivity

Two connection technologies are proposed between servo drives and SH3 servo motors:

- **One-Motor Cable connectivity** with references SH3070 and SH3100. Using a single cable, an hybrid cable including Motor and Encoder, to connect a motor to a Lexium 62 servo drive. The use of hybrid cables reduces effort for cable installation and cleaning.
- **Two-Motor Cable connectivity** with references SH040, SH3055, SH3070, SH3100, SH3140, SH3205: Using two separate cables (Motor and Encoder cables) to connect a motor to a Lexium 62 or a Lexium 52 servo drive.

Hybrid cables, Motor cables, and Encoder cables are to be ordered separately, for connection to Lexium 52 and Lexium 62 servo drives. See pages 12 to 15.
Schneider Electric has taken particular care with the compatibility of Lexium SH3 servo motors and Lexium 52/62 servo drives. This compatibility is enhanced when using equipped cables sold by Schneider Electric.

Special features

Lexium SH3 servo motors have been developed to comply with the following main specifications:

- Ambient operating temperature: - 20...+ 40 °C *(- 4...+ 104 °F)* without derating, in accordance with IEC 60721-3-3, category 3K3, and up to 55 °C *(131 °F)* with derating of 1% of the nominal output power per additional °C above 40 °C *(104°F)*
- Maximum operating altitude: 1,000 m *(3,280 ft)* without derating, 2,000 m *(6,561 ft)* with k = 0.86, and 3,000 m *(9,842 ft)* with k = 0.8 *(2)*.
- The relative humidity that the servo motor can withstand is in line with IEC 60721-3-3, categories 3K3, 3Z12, and 3Z2.
- The windings are insulation class F (maximum temperature for windings 155 °C *(311 °F)*, in accordance with IEC 60034-1.
- All mounting positions are permitted (horizontal mounting (IMB5) or vertical mounting (IMV1 with shaft end at the top and IMV3 with shaft end at the bottom) in accordance with IEC 60034-7.

(1) For a complete reference, replace ● with digits or letters, see Reference table on page PD304/4
(2) k: derating factor

Presentation *(continued)*

Integrated encoder

Lexium SH3 servo motors are equipped with a single-turn (131,072 points/turn) *(1)* or multi-turn (131,072 points/turn x 4,096 turns) *(1)* Hiperface® SinCos high-resolution absolute encoder, giving an angular shaft position that is precise to less than ± 1.3 arc minutes.
This encoder performs the following functions:

- Gives the absolute position of the motor to allow flow synchronization
- Measures the servo motor speed via the associated Lexium 52 or Lexium 62 servo drive (this information is used by the servo drive's speed controller)
- Measures the position information for the servo drive's position controller
- Sends data from the servo motor to the servo drive, which provides automatic identification of the motor when the servo drive starts

Free choice of Hiperface® SinCos and Hiperface® DSL encoders, with related motor connectivity: classic withTwo-Motor Cable connection or DSL with One-Motor Cable connectivity

Holding brake

Lexium SH3 servo motors can be equipped with an electromagnetic holding brake.

⚠ *Do not use the holding brake as a dynamic brake for deceleration, as this will quickly damage the brake.*

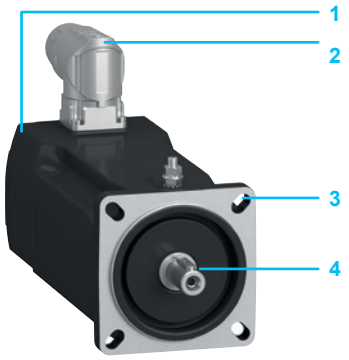

SH3070●●●●●3●●● (2) servo motors

Description

■ One-Motor Cable connectivity

Lexium SH3 servo motors, with a 3-phase stator and a 6 to 10-pole rotor (depending on model) with Neodymium-Iron-Borium (NdFeB) magnets, consist of:

1 Casing with RAL 9005 opaque black paint protective coating
2 Threaded sealed male angular connector for the hybrid cable *(3)*
3 4-point axial mounting flange
4 Smooth or keyed shaft end (depending on the model)

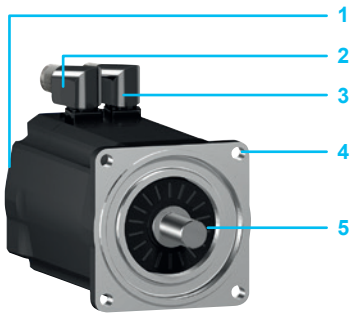

SH3070●●●●●2●●● (2) servo motors

■ Two-Motor Cable connectivity

Lexium SH3 servo motors, with a 3-phase stator and a 6 to 10-pole rotor (depending on model) with Neodymium-Iron-Borium (NdFeB) magnets, consist of:

1 Casing with RAL 9005 opaque black paint protective coating
2 Threaded sealed male angular connector for the Motor cable *(2)*
5 Threaded sealed male angular connector for the Encoder cable (control) *(2)*
4 4-point axial mounting flange
5 Smooth or keyed shaft end (depending on the model)

(1) Encoder resolution given for use with Lexium 52/62 servo drives.
(1) For a complete reference, replace ● with digits or letters, see Reference table on page PD304/4
(3) For other model with angular connector, see page 12 (One-Motor Cable connectivity) and 16 (Two-Motor Cable connectivity).

Lexium SH3/MH3/SHS

Servo motors for Lexium 62 and Lexium 52 servo drives

Lexium SH3 servo motors

Lexium SH3 servo motors – References

To order a Lexium SH3 servo motor, complete each reference with:

			SH3	**●●●**	**●**	**●**	**●**	**●**	**●**	**●**	**●●**
Flange Size	40 mm *(1.575 in)*			**040**							
	55 mm *(2.165 in.)*			**055**							
	70 mm *(2.756 in.)*			**070**							
	100 mm *(3.937 in.)*			**100**							
	140 mm *(5.512 in.)*			**140**							
	205 mm *(8.071 in.)*			**205**							
Stack Length	One stack (all flange sizes)				**1**						
	Two stacks (all flange sizes)				**2**						
	Three stacks (flange size 70, 100, 140, 205 only)				**3**						
	Four stacks (flange size 100, 140 only)				**4**						
Winding	Medium speed (480 VAC) *(1)*					**P**					
	Low speed, current optimized *(2)*					**M**					
Shaft end	Smooth shaft						**0**				
	Keyed shaft						**1**				
Encoder sytem	Absolute SinCos Single Turn - 128 traces per turn (SKS 36)							**1**			
	Absolute SinCos Multi Turn - 128 traces per turn (SKM 36)							**2**			
	Absolute SinCos Single Turn - 16 traces per turn (SEK 37)							**6**			
	Absolute SinCos Multi Turn - 16 traces per turn (SEL 37)							**7**			
	One-Motor Cable connectivity	Absolute Single Turn (Hiperface® DSL 18 bit EKS36) *(3)*						**A**			
		Absolute Multi Turn (Hiperface® DSL 18 bit EKM36) *(3)*						**B**			
Holding brake	Without brake								**A**		
	With brake								**F**		
Connection	Two-Motor Cable connectivity	Straight connectors								**1**	
		Angular connectors								**2**	
	One-Motor Cable connectivity (DSL cable + Quick lock connector)	Straight connector *(3)*								**3**	
		Angular turnable connector								**4**	
Degree of protection	Shaft IP54 without shaft sealing ring, housing IP65, convection										**0**
	Shaft IP65 with shaft sealing ring, housing IP65, convection										**1**
Motor type	Standard: **00**/Customer versions: **01...99**										**00**

Lexium SH3 servo motors – dimensions

One-Motor Cable connectivity and Two-Motor Cable connectivity

Servo motors	**Flange**		**W x H x D** *(4)*			
			Without holding brake		**With holding brake**	
	mm	***in.***	**mm**	***in.***	**mm**	***in.***
SH30401●●●●●●●●	40 x 40	*1.57 x 1.57*	40 x 73.4 x 98.4	*1.57 x 2.88 x 3.87*	40 x 99.4 x 124.4	*1.57 x 3.91 x 4.89*
SH30402●●●●●●●●	40 x 40	*1.57 x 1.57*	40 x 93.4 x 118.4	*1.57 x 3.67 x 4.66*	40 x 119.4 x 144.4	*1.57 x 4.70 x 5.68*
SH30551●●●●●●●●	55 x 55	*2.16 x 2.16*	55 x 94.5 x 132.5	*2.16 x 3.72 x 5.22*	55 x 94.5 x 159	*2.16 x 3.72 x 6.26*
SH30552●●●●●●●●	55 x 55	*2.16 x 2.16*	55 x 94.5 x 154.5	*2.16 x 3.72 x 6 .08*	55 x 94.5 x 181	*2.16 x 3.72 x 7.13*
SH30553●●●●●●●●	55 x 55	*2.16 x 2.16*	55 x 94.5 x 176.5	*2.16 x 3.72 x 6.95*	55 x 94.5 x 203	*2.16 x 3.72 x 7.99*
SH30701●●●●●●●●	70 x 70	*2.76 x 2.76*	70 x 111.5 x 154	*2.76 x 4.39 x 6.06*	70 x 111.5 x 180	*2.76 x 4.39 x 7.09*
SH30702●●●●●●●●	70 x 70	*2.76 x 2.76*	70 x 111.5 x 187	*2.76 x 4.39 x 7.36*	70 x 111.5 x 213	*2.76 x 4.39 x 8.39*
SH30703●●●●●●●●	70 x 70	*2.76 x 2.76*	70 x 111.5 x 220	*2.76 x 4.39 x 8.66*	70 x 111.5 x 254	*2.76 x 4.39 x 10.00*
SH31001●●●●●●●●	100 x 100	*3.94 x 3.94*	100 x 138.5 x 169	*3.94 x 5.45 x 6.65*	100 x 138.5 x 200	*3.94 x 5.45 x 7.87*
SH31002●●●●●●●●	100 x 100	*3.94 x 3.94*	100 x 138.5 x 205	*3.94 x 5.45 x 8.07*	100 x 138.5 x 236	*3.94 x 5.45 x 9.29*
SH31003●●●●●●●●	100 x 100	*3.94 x 3.94*	100 x 138.5 x 241	*3.94 x 5.45 x 9.49*	100 x 138.5 x 272	*3.94 x 5.45 x 10.71*
SH31004●●●●●●●●	100 x 100	*3.94 x 3.94*	100 x 138.5 x 277	*3.94 x 5.45 x 10.91*	100 x 138.5 x 308	*3.94 x 5.45 x 12.13*
SH31401●●●●●●●●	140 x 140	*5.51 x 5.51*	140 x 178 x 218	5.51 x 7.01 x 8.58	140 x 178 x 256	*5.51 x 7.01 x 10.08*
SH31402●●●●●●●●	140 x 140	*5.51 x 5.51*	140 x 192.5 *(5)* x 273	*5.51 x 7.58 (5) x 10.75*	140 x 192.5 *(5)* x 311	*5.51 x 7.58 (5) x 12.24*
SH31403●●●●●●●●	140 x 140	*5.51 x 5.51*	140 x 192.5 *(5)* x 328	*5.51 x 7.58 (5) x 12.91*	140 x 192.5 *(5)* x 366	*5.51 x 7.58 (5) x 14.41*
SH31404●●●●●●●●	140 x 140	*5.51 x 5.51*	140 x 192.5 *(5)* x 383	*5.51 x 7.58 (5) x 15.08*	140 x 192.5 *(5)* x 421	*5.51 x 7.58 (5) x 16.58*
SH32051●●●●●●●●	205 x 205	*8.07 x 8.07*	205 x 259 x 321	*8.07 x 10.20 x 12.64*	205 x 259 x 370.5	*8.07 x 10.20 x 14.59*
SH32052●●●●●●●●	205 x 205	*8.07 x 8.07*	205 x 259 x 405	*8.07 x 10.20 x 15.94*	205 x 259 x 454.5	*8.07 x 10.20 x 17.89*
SH32053●●●●●●●●	205 x 205	*8.07 x 8.07*	205 x 259 x 489	*8.07 x 10.20 x 19.25*	205 x 259 x 538.5	*8.07 x 10.20 x 21.20*

*(1) Motors with **P** winding are available with the two techonologies of connectivity: One-Motor Cable and Two-Motor Cable.*
*(2) Motors with **M** winding are only available with Two-Motor Cable connectivity.*
(3) Only available for SH3070 and SH3100 motors.
(4 D = motor length (excluding shaft end).
(5) 192.5 mm (7.58 in.) with straight connector, 198.5 mm (7.82 in.) with rotatable angular connector.

Lexium SH3/MH3/SHS

Servo motors for Lexium 62 and Lexium 52 servo drives

Lexium SH3 servo motors

Lexium SH3 servo motors – Characteristics

The Lexium SH3 servo motors shown below are supplied without a gearbox. For GBX and GBY gearboxes, Please refer to our catalog **Ref.** DIA3ED2160313EN.

Technical datas

Nominal servo motor output power		Continuous stall torque		Peak stall torque		Rated torque		Rated speed		Rotor moment of inertia without holding brake (with holding brake)	Reference	Weight without holding brake (with holding brake)	
Pn		M0		Mmax		Mn		Nn	Nmax	Jm			
kW	*hp*	Nm	*ft-lbf*	Nm	*ft-lbf*	Nm	ft-lbf	rpm	rpm	kgcm²		kg	*lb*
0.17	*0.2*	0.21	*0,2*	0.75	*0.55*	0.18	*0.1*	9000	10000	0.0232 (0.0400)	**SH30401P●●●●●●●** *(1)*	0.400 (0.600)	*0.88 (1.32)*
0.29	*0.4*	0.39	*0.29*	1.5	*1.11*	0.31	*0.23*	9000	10000	0.0419 (0.0588)	**SH30402P●●●●●●●** *(1)*	0.600 (0.800)	*1.32 (1.76)*
0.29	*0.4*	0.42	*0.31*	1.5	*1.1*	0.35	*0.29*	8000	9000	0.057 (0.079)	**SH30551P●●●●●●●** *(1)*	1.200 (1.300)	*2.65 (2.83)*
0.53	*0.7*	0.71	*0.52*	2.5	*1.8*	0.63	*0.46*	8000	9000	0.093 (0.115)	**SH30552P●●●●●●●** *(1)*	1.500 (1.600)	*3.31 (3.49)*
0.68	*0.92*	1.05	*0.77*	3.5	*2.6*	0.81	*0.60*	8000	9000	0.130 (0.152)	**SH30553P●●●●●●●** *(1)*	1.700 (1.800)	*3.75 (4.15)*
0.69	*0.93*	1.25	*1.0*	3.5	*2.6*	1.1	*081*	6000	8000	0.205 (0.318)	**SH30701P●●●●●●●** *(1)*	1.900 (2.100)	*4.19 (4.63)*
1.13	*1.54*	2.04	*1.5*	7.6	*5.6*	1.9	*1.4*	6000	8000	0.351 (0.464)	**SH30702P●●●●●●●** *(1)*	2.800 (3.000)	*6.12 (6.66)*
1.33	*1.81*	2.94	*2.17*	11.3	*8.3*	2.12	*1.56*	6000	8000	0.503 (0.616)	**SH30703P●●●●●●●** *(1)*	3.400 (3.500)	*7.50 (7.72)*
1.19	*1.62*	2.94	*2.77*	9.6	*7.1*	2.27	*.67*	5000	6000	1.100 (1.613)	**SH31001P●●●●●●●** *(1)*	4.400 (4.900)	*9.70 (10.80)*
1.9	*2.5*	5.8	*4.3*	18.3	*13.5*	4.6	*3.4*	4000	6000	1.909 (2.422)	**SH31002P●●●●●●●** *(1)*	6.000 (6.500)	*13.23 (14.33)*
2.4	*3.2*	8.0	*5.9*	28.3	*20.8*	5.7	*4.2*	4000	6000	2.718 (3.521)	**SH31003P●●●●●●●** *(1)*	7.700 (8.400)	*16.98 (18.52)*
2.5	*3.4*	10.0	*7.4*	40.5	*29.9*	7.9	*5.8*	3000	6000	3.613 (4.416)	**SH31004P●●●●●●●** *(1)*	9.400 (10.300)	*20.72 (22.71)*
2.9	*3.9*	11.1	*8.2*	27	*1.5*	9.2	*6.8*	3000	4000	6.941 (8.542)	**SH31401P●●●●●●●** *(1)*	11.500 (12.900)	*25.35 (28.44)*
3.9	*5.2*	19.5	*14.4*	60.1	*44.3*	12.3	*9.1*	3000	4000	12.162 (14.824)	**SH31402P●●●●●●●** *(1)*	16.500 (18.100)	*36.38 (39.90)*
4.1	*5.4*	27.8	*20.5*	90.2	*66.5*	12.9	*9.5*	3000	4000	17.383 (21.559)	**SH31403P●●●●●●●** *(1)*	21.900 (24.000)	*48.28 (52.91)*
4.04	*5.5*	33.4	*24.6*	131.9	*97.3*	12.9	*9.5*	3000	4000	22.604 (26.794)	**SH31404P●●●●●●●** *(1)*	27.000 (29.300)	*59.52 (64.60)*
5.5	*7.4*	36.9	*27.2*	110	*81.1*	17.5	*12.9*	3000	3800	71.40 (87.40)	**SH32051P●●●●●●●** *(1)*	35.000 (38.600)	*77.17 (85.1)*
7.9	*10.7*	64.9	*47.9*	220	*162.3*	38.1	*28.1*	2000	3800	129 (145)	**SH32052P●●●●●●●** *(1)*	50.000 (53.600)	*110.23 (118.2)*
10.6	*14.2*	94.4	*69.6*	330	*243.4*	50.7	*37.4*	2000	3800	190 (206)	**SH32053P●●●●●●●** *(1)*	67.000 (70.600)	*147.71 (155.65)*
0.64	*0.9*	2.04	*1.5*	7.6	*5.6*	2.03	*1.50*	3000	8000	0.351 (0.464)	**SH30702M●●●●●●●** *(2)*	2.800 (3.000)	*6.17 (6.61)*
0.83	*1.1*	2.94	*2.17*	11.3	*8.3*	2.63	*1.94*	3000	8000	0.503 (0.616)	**SH30703M●●●●●●●** *(2)*	3.400 (3.500)	*7.50 (7.72)*
0.66	*0.9*	2.94	*2.17*	9.6	*7.1*	2.52	*1.86*	2500	6000	1.100 (1.613)	**SH31001M●●●●●●●** *(2)*	4.400 (4.900)	*9.70 (10.80)*
1.1	*1.5*	5.8	*4.3*	18.3	*13.5*	5.2	*3.4*	2000	6000	1.909 (2.422)	**SH31002M●●●●●●●** *(2)*	7.700 (8.400)	*16.98 (18.52)*
1.5	*2.0*	8	*5.9*	28.3	*20.9*	7	*5.2*	2000	6000	2.718 (3.521)	**SH31003M●●●●●●●** *(2)*	11.500 (12.900)	*25.35 (28.44)*
1.7	*2.3*	11.1	*8.2*	27	*19.9*	10.6	*7.8*	1500	4000	6.941 (8.542)	**SH31401M●●●●●●●** *(2)*	11.900 (13.000)	*26.24 (28.67)*

*(1) Motors with **P** winding are available with the two techonologies of connectivity: One-Motor Cable and Two-Motor Cable.*
*(2) Motors with **M** winding are only available with Two-Motor Cable connectivity.*

Lexium SH3/MH3/SHS

Servo motors for Lexium 62 and Lexium 52 servo drives

Lexium SH3 servo motor and Lexium 62 servo drive – combinations

Lexium 62 Servo Drives					Servo motors				Motor		
Reference					Reference						
	Inom			Ipeak		Size	Winding		Io	Inom	Ipeak
	A @ 4 kHz	A @ 8 kHz	A @ 16 kHz	A					A	A	A
LXM62DU60C21000 LXM62DU60D21000 LXM62DU60E21000 LXM62DU60F21000 LXM62DU60G21000	2	2	1.2	6	SH3	0401	P		1.12	1.025	4.7
						0402	P		1.5	1.17	6
						0551	P		0.73	0.62	2.9
						0552	P		1.2	1.1	4.8
						0702	M		1.5	1.5	6
						0553	P	*(1)*	1.7	1.35	6.5
						0701	P		1.8	1.6	5.7
LXM62DD15C21000 LXM62DD15D21000 LXM62DD15E21000 LXM62DD15F21000 LXM62DD15G21000	5	5	3.5	15	SH3	0702	P		2.9	2.6	11.8
LXM62DU60C21000 LXM62DU60D21000 LXM62DU60E21000 LXM62DU60F21000 LXM62DU60G21000	2	2	1.2	6	SH3	0703	M	*(1)+(2)*	2.1	1.9	8.7
						1001	M	*(1)*	1.8	1.6	6.3
LXM62DD15C21000 LXM62DD15D21000 LXM62DD15E21000 LXM62DD15F21000 LXM62DD15G21000	5	5	3.5	15	SH3	1002	M		2.5	2.3	9
						0703	P	*(1)*	4.1	3	17
						1001	P		3.5	2.8	12
						1002	P	*(1)*	4.8	3.8	17.1
						1003	M		3.4	3.1	14.7
						1401	M		4	4	10.8
LXM62DD27C21000 LXM62DD27D21000 LXM62DD27E21000 LXM62DD27F21000 LXM62DD27G21000	9	7	4	27	SH3	1003	P	*(1)*	6.6	4.9	28.3
						1004	P	*(1)*	6.2	5.3	32.3
						1401	P		6.8	7.8	20.8
LXM62DD45C21000 LXM62DD45E21000 LXM62DD45G21000	20	15	8	45	SH3	1402	P		13.2	8.9	44.1
						1403	P	*(1)*	17.6	8.7	61
LXM62DC13C21000 LXM62DC13E21000 or LXM62DD45C21000 LXM62DD45E21000 LXM62DD45G21000 *(1)*	50	50	30	130	SH3	1404	P		21.3	11	95.6
						2051	P		21	11.5	87.2
LXM62DC13C21000 LXM62DC13E21000	50	50	30	130	SH3	2052	P		25.7	17.8	96.8
						2053	P	*(1)*	33.2	20.4	136.1

(1) Drive peak current lower than motor peak current
(2) Continuous torque limited by nominal drive current

Lexium SH3/MH3/SHS

Servo motors for Lexium 62 and Lexium 52 servo drives

Lexium SH3 servo motors

Lexium SH3 servo motor and Lexium 52 servo drive – combinations

Lexium 52 Servo drives			Servo motors				Motor		
Reference			Reference						
	Inom	Ipeak		Size	Winding		Io	Inom	Ipeak
	A @ 8 kHz	A					A	A	A
LXM52DU60C41000	1.5	6	SH3	0401	P		1.12	1.025	4.7
				0402	P		1.5	1.17	6
				0551	P		0.73	0.62	2.9
				0552	P		1.2	1.1	4.8
				0702	M		1.5	1.5	6
LXM52DD12C41000	3	12	SH3	0553	P		1.7	1.35	6.5
				0701	P		1.8	1.6	5.7
				0702	P		2.9	2.6	11.8
				0703	M		2.1	1.9	8.7
				1001	M		1.8	1.6	6.3
				1002	M		2.5	2.3	9
LXM52DD18C41000	6	18	SH3	0703	P		4.1	3	17
				1001	P		3.5	2.8	12
				1002	P		4.8	3.8	17.1
				1003	M		3.4	3.1	14.7
				1401	M		4	4	10.8
LXM52DD30C41000	10	30	SH3	1003	P		6.6	4.9	28.3
				1004	P	*(1)*	6.2	5.3	32.3
				1401	P		7.8	6.8	20.8
LXM52DD72C41000	24	72	SH3	1004	P		6.2	5.3	32.3
				1402	P		13.2	8.9	44.1
				1403	P		17.6	8.7	61
				1404	P	*(1)*	21.3	11	95.6
				2051	P	*(1)*	21	11.5	87.2
				2052	P	*(1)+(2)*	25.7	17.8	96.8
				2053	P	*(1)+(2)*	33.2	20.4	136.1

(1) Drive peak current lower than motor peak current
(2) Continuous torque limited by nominal drive current

Lexium SH3 servo motor and Lexium 62 ILD detached servo drive – combinations

Lexium 62 ILD detached servo drives			Servo motors			Motor		
Reference			Reference					
	Inom	Ipeak		Size	Winding	Io	Inom	Ipeak
	A @ 8 kHz	A				A	A	A
ILM62DDD24A1000	5	24	SH3	0401	P	1.12	1.025	4.7
ILM62DDD24C1000	6 (with cold plate)	24		0402	P	1.5	1.17	6
ILM62DDD24B1000	2,7	24		0551	P	0.73	0.62	2.9
ILM62DDD24D1000	4.4/6 (with cold plate)	24		0552	P	1.2	1.1	4.8
				0702	M	1.5	1.5	6
				0553	P	1.7	1.35	6.5
				0701	P	1.8	1.6	5.7
				0702	P	2.9	2.6	11.8
				0703	M	2.1	1.9	8.7
				1001	M	1.8	1.6	6.3
				1002	M	2.5	2.3	9
				0703	P	4.1	3	17
				1001	P	3.5	2.8	12
				1002	P	4.8	3.8	17.1
				1003	M	3.4	3.1	14.7
				1401	M	4	4	10.8

Lexium SH3/MH3/SHS

Servo motors for Lexium 62 and Lexium 52 servo drives

Lexium MH3 servo motors

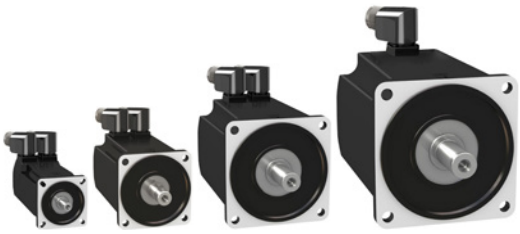

Lexium MH3 servo motor range

Presentation

Lexium MH3 servo motors provide excellent power density values to meet the requirements of compact machines. With four flange sizes and three different lengths for each flange size, they are suitable for many applications, covering a continuous stall range from 1.4 to 65 Nm *(1.0 to 47.9 lbf ft)* for speeds up to 6,000 rpm.
The Lexium MH3 servo motors have a medium inertia motor, which means they are particularly suitable for high-load applications.
They help to simplify installation and adjustment by providing robust adjustment of the movement.
Lexium MH3 servo motors are UL Recognized and conform to UL1004 as well as European directives (CE marking).
They are available with the following variants:

- 4 flange sizes: 70, 100, 140, and 190 mm (*2.76, 3.94, 5.51, and 7.48 in.)*
- Degree of protection:
  - IP 65 for the shaft end in accordance with IEC/EN 60529 (IP 67 with the conformity kit, which is available as an option)
  - IP 65 for the casing (IP 67 with the conformity kit, which is available as an option)
- With or without holding brake
- Angular connectors for motor and encoder connection
- Integrated single-turn or multi-turn Hiperface® SinCos encoder (medium or high resolution)
- Smooth or keyed shaft end

Special features

Lexium MH3 servo motors have been developed to comply with the following main specifications:

- The ambient operating temperature is - 20...+ 40 °C *(- 4...+ 104 °F)* without derating, in accordance with IEC 60721-3-3, category 3K3, and up to 55 °C *(131 °F)* with derating of 1% of the nominal output power per additional °C above 40 °C *(104 °F)*.
- The maximum operating altitude is 1,000 m *(3,280 ft)* without derating, 2,000 m *(6,561 ft)* with k = 0.86, and 3,000 m *(9,842 ft)* with k = 0.8 *(1)*.
- The relative humidity that the servo motor can withstand is in line with IEC 60721-3-3, categories 3K3, 3Z12, and 3Z2.
- The windings are insulation class F (maximum temperature for windings 155 °C *(311 °F)* in accordance with IEC 60034-1.
- All mounting positions are permitted (horizontal mounting (IMB5) or vertical mounting (IMV1 with shaft end at the top and IMV3 with shaft end at the bottom) in accordance with IEC 60034-7.

Holding brake

Lexium MH3 servo motors can be equipped with an electromagnetic holding brake.

⚠ *Do not use the holding brake as a dynamic brake for deceleration, as this will quickly damage the brake.*

Integrated encoder

Lexium MH3 servo motors include an absolute encoder as standard equipment.
This encoder performs the following functions:

- Gives the absolute position of the motor to allow flow synchronization
- Measures the servo motor speed via the associated Lexium 52/62 servo drive (this information is used by the servo drive's speed controller)
- Measures the position information for the servo drive's position controller
- Sends data from the servo motor to the servo drive, which provides automatic identification of the motor when the servo drive starts

Four types of encoder are available:

- High resolution Hiperface® SinCos encoder:
  - Single-turn (131,072 points/turn) *(2)*
  - Multi-turn (131,072 points/turn x 4,096 turns) *(2)*

  These encoders give an angular shaft position that is precise to less than ± 1.3 arc minutes.
- Medium resolution Hiperface® SinCos encoder:
  - Single-turn (32,768 points/turn) *(2)*
  - Multi-turn (32,768 points/turn x 4,096 turns) *(2)*

  These encoders give an angular shaft position that is precise to less than ± 4.8 arc minutes.

(1) k: derating factor
(2) Encoder resolution given for use with a Lexium 52 and Lexium 62 servo drives.

Lexium SH3/MH3/SHS

Servo motors for Lexium 62 and Lexium 52 servo drives

Lexium MH3 servo motors

Lexium MH3 servo motors – description

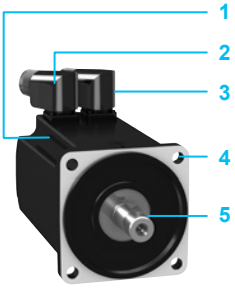

Lexium MH3 servo motors, with a 3-phase stator and a 10-pole rotor with Neodymium-Iron-Boron (NdFeB) magnets, consist of:

1 Casing with RAL 9005 opaque black paint protective coating
2 Threaded sealed male angular connector for the Motor cable
3 Threaded sealed male angular connector for the Encoder cable (control)
4 4-point axial mounting flange
5 Smooth or keyed shaft end (depending on the model)

Cables and connectors (Two-Motor Cable connectivity) to be ordered separately, for connection to Lexium 52 and Lexium 62 servo drives. See page 14.
Schneider Electric has taken particular care with the compatibility of Lexium MH3 servo motors and Lexium 52/62 servo drives. This compatibility is enhanced when using cables and connectors sold by Schneider Electric.

Lexium MH3 servo motors – references

To order a Lexium MH3 servo motor, complete each reference with:

		MH3 ●●●	●	●	●	●	●	●	●	●●
Flange size	70 mm *(2.756 in.)*	070								
	100 mm *(3.937 in.)*	100								
	140 mm *(5.512 in.)*	140								
	190 mm *(8.071 in.)*	190								
Stack Length	1 stack		1							
	2 stacks		2							
	3 stacks		3							
Winding	Optimized in terms of torque and speed of rotation			P						
Shaft end	Smooth				0					
	Parallel key				1					
Integrated sensor High resolution, optical	Single-turn, Hiperface® SinCos □ 131.072 increments/revolution □ 128 Sin/Cos periods per revolution					1				
	Multi-turn, Hiperface® SinCos □ 131.072 increments/revolution x 4096 revolutions □ 128 Sin/Cos periods per revolution					2				
Integrated sensor Medium resolution, optical	Single-turn, Hiperface® SinCos □ 32.768 increments/revolution □ 16 Sin/Cos periods per revolution					6				
	Multi-turn, Hiperface® SinCos □ 32.768 increments/revolution x 4096 revolutions □ 16 Sin/Cos periods per revolution					7				
Holding brake	Without						A			
	With						F			
Connection	Angular connector 90°, can be rotated							2		
Degree of protection	IP65 (shaft/housing) *(1)*								2	
Motor type	Standard									00

(1) IP 67 with the VW3M230● conformity kit, supplied as an option.

Lexium MH3 servo motors – dimensions (overall)

Servo motors	**Flange size**		**Width x Height x Depth** *(1)*			
			Without integrated holding brake		**With integrated holding brake**	
	mm	***in.***	**mm**	***in***	**mm**	***in***
MH30701P●●●●●●●	70 x 70	*2.76 x 2.76*	70 x 109.5 x 122	*2.76 x 4.31 x 4.80*	70 x 109.5 x 161	*2.76 x 4.31 x 6.34*
MH30702P●●●●●●●	70 x 70	*2.76 x 2.76*	70 x 109.5 x 154	*2.76 x 4.31 x 6.06*	70 x 109.5 x 193	*2.76 x 4.31 x 7.60*
MH30703P●●●●●●●	70 x 70	*2.76 x 2.76*	70 x 109.5 x 186	*2.76 x 4.31 x 7.32*	70 x 109.5 x 225	*2.76 x 4.31 x 8.86*
MH31001P●●●●●●●	100 x 100	*3.94 x 3.94*	100 x 139.5 x 128	*3.94 x 5.49 x 5.04*	100 x 139.5 x 170	*3.94 x 5.49 x 6.69*
MH31002P●●●●●●●	100 x 100	*3.94 x 3.94*	100 x 139.5 x 160	*3.94 x 5.49 x 6.30*	100 x 139.5 x 202	*3.94 x 5.49 x 7.95*
MH31003P●●●●●●●	100 x 100	*3.94 x 3.94*	100 x 139.5 x 192	*3.94 x 5.49 x 7.56*	100 x 139.5 x 234	*3.94 x 5.49 x 9.21*
MH31401P●●●●●●●	140 x 140	*5.51 x 5.51*	140 x 179.5 x 152	*5.51 x 7.07 x 5.98*	140 x 179.5 x 187	*5.51 x 7.07 x 7.36*
MH31402P●●●●●●●	140 x 140	*5.51 x 5.51*	140 x 179.5 x 192	*5.51 x 7.07 x 7.56*	140 x 179.5 x 227	*5.51 x 7.07 x 8.94*
MH31403P●●●●●●●	140 x 140	*5.51 x 5.51*	140 x 179.5 x 232	*5.51 x 7.07 x 9.13*	140 x 179.5 x 267	*5.51 x 7.07 x 10.51*
MH31901P●●●●●●●	190 x190	*5.51 x 5.51*	190 x 257 x 190	*7.48 x 10.12 x 7.48*	190 x 257 x 248	*7.48 x 10.12 x 9.76*
MH31902P●●●●●●●	190 x 190	*7.48 x 7.48*	190 x 257 x 250	*7.48 x 10.12 x 9.84*	190 x 257 x 308	*7.48 x 10.12 x 12.13*
MH31903P●●●●●●●	190 x 190	*7.48 x 7.48*	190 x 257 x 310	*7.48 x 10.12 x 12.21*	190 x 257 x 368	*7.48 x 10.12 x 14.49*

(1) D: Housing dimensions (without shaft).

Lexium SH3/MH3/SHS

Servo motors for Lexium 62 and Lexium 52 servo drives

Lexium MH3 servo motors

Lexium MH3 servo motors – Characteristics

The MH3 servo motors shown below are supplied without a gearbox. For GBX and GBY gearboxes, Please refer to our catalog Ref. DIA3ED2160313EN

Technical datas

Nominal servo motor output power		Continuous stall torque		Peak stall torque		Rated torque		Rated speed		Rotor moment of inertia (without holding brake)	Reference	Weight without holding brake (with holding brake)	
Pn		M0		Mmax		Mn		Nn	Nmax	Jm			
kW	*hp*	Nm	*ft-lbf*	Nm	*ft-lbf*	Nm	*ft-lbf*	rpm	rpm	kgcm²		kg	*lb*
0.750	*1.0*	1.4	*1.0*	4.2	*3.1*	1.3	*0.9*	5500	6000	0.59	**MH30701P●●●●●●●**	1.600 (2.6000)	*3.53 (5.73)*
1.2	*1.6*	2.5	*1.9*	7.4	*5.5*	1.9	*1.4*	5500	6000	1.13	**MH30702P●●●●●●●**	2.300 (3.300)	*5.07 (7.28)*
1.3	*1.8*	3.4	*2.5*	10.2	*7.5*	2.3	*1.7*	5000	6000	1.67	**MH30703P●●●●●●●**	3.000 (4.000)	*6.61 (8.82)*
1.3	*1.7*	3.4	*2.5*	10.2	*7.5*	2.9	*2.1*	4000	6000	3.19	**MH31001P●●●●●●●**	3.340 (4.800)	*7.36 (10.58)*
1.2	*2.7*	6	*4.4*	18	*13.3*	4.2	*3.1*	4000	6000	6.28	**MH31002P●●●●●●●**	4.920 (6.400)	*4.920 (14.11)*
2.9	*3.9*	9	*6.6*	27	*19.9*	6.2	*4.6*	4000	6000	10.3	**MH31003P●●●●●●●**	6.500 (8.150)	*14.33 (17.97)*
2.6	*3.6*	10.3	*7.6*	39.9	*29.4*	7.2	*5.3*	3500	4000	16.46	**MH31401P●●●●●●●**	8.000 (10.300)	*17.64 (22.71)*
3.7	*5.1*	18.5	*13.6*	55.5	*40.9*	10.2	*7.5*	3500	4000	32	**MH31402P●●●●●●●**	12.000 (14.300)	*26.46 (31.53)*
4.8	*6.5*	24	*17.7*	75	*55.3*	13.1	*9.7*	3500	4000	47.5	**MH31403P●●●●●●●**	16.000 (18.500)	*35.27 (40.79)*
5.2	*7.0*	30	*22.1*	90	*66.38*	17.9	*13.2*	3000	4000	71.4	**MH31901P●●●●●●●**	33.000 (37.900)	*72.75 (83.56)*
6.1	*8.3*	48	*35.4*	144	*106.2*	24.9	*18.4*	2000	4000	129	**MH31902P●●●●●●●**	44.000 (48.900)	*97.00 (107.81)*
7.2	*10.5*	65	*47.9*	195	*143.8*	50.7	*37.4*	2000	3500	190	**MH31903P●●●●●●●**	67.000 (71.900)	*147.71 (158.51)*

Lexium MH3 servo motor and Lexium 62 servo drive – combinations

Lexium 62 servo drive					Servo motors			Motor		
Reference					Reference					
	Inom			Ipeak		Size	Winding	Io	Inom	Ipeak
	A @ 4 kHz	A @ 8 kHz	A @ 16 kHz	A				A	A	A
LXM62DU60C21000 LXM62DU60D21000 LXM62DU60E21000 LXM62DU60F21000 LXM62DU60G21000	2	2	1.2	6	**MH3**	**0701**	**P**	1.78	1.72	5.97
LXM62DD15C21000 LXM62DD15D21000 LXM62DD15E21000 LXM62DD15F21000 LXM62DD15G21000	5	5	3.5	15	**MH3**	**0702**	**P**	2.94	2.49	9.68
						0703	**P**	3.91	3.02	12.57
						1001	**P**	3.15	2.82	11.20
LXM62DD27C21000 LXM62DD27D21000 LXM62DD27E21000 LXM62DD27F21000 LXM62DD27G21000	9	7	4	27	**MH3**	**1002**	**P**	5.04	4.10	17.50
LXM62DD45C21000	9	7	4	45	**MH3**	**1003**	**P**	7.69	6.07	26.71
LXM62DD45E21000 LXM62DD45G21000	20	15	8	45	**MH3**	**1401**	**P**	8.58	6.35	29.80
LXM62DC13C21000 LXM62DC13E21000 or LXM62DD45C21000 LXM62DD45E21000 LXM62DD45G21000 *(1)*	50	50	30	130	**MH3**	**1402**	**P**	16.83	9.76	57.42
						1403	**P**	18.00	10.42	62.32
						1901	**P**	23.2	14.00	89.6
LXM62DC13C21000 LXM62DC13E21000	50	50	30	130	**MH3**	**1902**	**P**	30.8	19.30	114
						1903	**P**	36.1	21.30	124.5

(1) Drive peak current lower than motor peak current

Lexium SH3/MH3/SHS

Servo motors for Lexium 62 and Lexium 52 servo drives

Lexium MH3 servo motors

Lexium MH3 servo motor and Lexium 52 servo drive – combinations

Lexium 52 servo drive			Servo motors				Motor		
Reference			Reference						
	Inom	Ipeak		Size	Winding		Io	Inom	Ipeak
	A @ 8 kHz	A					A	A	A
LXM52DU60C41000	1.5	6	MH3	0701	P	(1)	1.78	1.72	5.97
LXM52DD12C41000	3	12	MH3	0702	P		2.94	2.49	9.68
				0703	P	(2)	3.91	3.02	12.57
				1001	P		3.15	2.82	11.20
LXM52DD18C41000	6	18	MH3	1002	P		5.04	4.10	17.50
LXM52DD30C41000	10	30	MH3	1003	P		7.69	6.07	26.71
				1401	P		8.58	6.35	29.80
LXM52DD72C41000	24	72	MH3	1402	P		16.83	9.76	57.42
				1403	P		18.00	10.42	62.32
				1901	P	(2)	23.2	14.00	89.6
				1902	P	(2)	30.8	19.30	114
				1903	P	(2)	36.1	21.30	124.5

(1) Continuous torque limited by nominal drive current.
(2) Drive peak current lower than motor peak current.

Lexium MH3 servo motor and Lexium 62 ILD detached servo drive – combinations

Lexium 62 ILD detached servo drives			Servo motors			Motor		
Reference			Reference					
	Inom	Ipeak		Size	Winding	Io	Inom	Ipeak
	A @ 8 kHz	A				A	A	A
ILM62DDD24A1000	5	24	MH3	0701	P	1.78	1.72	5.97
ILM62DDD24C1000	6 (with cold plate)	24		0702	P	2.94	2.49	9.68
ILM62DDD24B1000	2,7	24		0703	P	3.91	3.02	12.57
ILM62DDD24D1000	4.4/6 (with cold plate)	24		1001	P	3.15	2.82	11.20
				1002	P	5.04	4.10	17.50

Lexium SH3/MH3/SHS

Servo motors for Lexium 62 and Lexium 52 servo drives

Lexium SH3 servo motors: connection elements

Cable selection by motor power class (One-Motor Cable connectivity)

Motor	Hybrid cable	Power cross section (UVW-PE)	Connector size
SH30701	VW3ED143R●●●, VW3EF143R●●●	4x 1.5 mm²	M23 9 pin Quick lock
SH30702			
SH30703			
SH31001			
SH31002			
SH31003			
SH31004			

Hybrid cables (One-Motor Cable connectivity)

Designation	Description	From servo motor	To servo drive	Composition	Length m	Length ft.	Reference	Weight kg	Weight lb
Hybrid cables for "One-Motor Cable connectivity"	Shielded cables equipped with a Quick lock M23 connector (servo motor end) and an RJ45 connector for the Encoder and free leads for Motor and holding brake (servo drive end)	SH3 "One-Motor Cable"	Lexium 62	4x 1.5 mm² + 2x 0.75 mm² + 2x AWG24	2	6.56	VW3ED143R020	0.570	1.26
					3	9.84	VW3ED143R030	0.780	1.72
					4	13.12	VW3ED143R040	0.990	2.18
					5	16.40	VW3ED143R050	1.200	2.65
					8	26.25	VW3ED143R080	1.830	4.03
					10	32.81	VW3ED143R100	2.250	4.96
					15	49.213	VW3ED143R150	3.290	7.25
					20	65.617	VW3ED143R200	4.340	9.57
					25	82.021	VW3ED143R250	5.380	11.86
					30	98.425	VW3ED143R300	6.430	14.18
					35	114.829	VW3ED143R350	7.470	16.47
					40	131.234	VW3ED143R400	8.520	18.78
					45	147.638	VW3ED143R450	9.560	21.08
					50	164.042	VW3ED143R500	10.610	23.39

Hybrid cable extensions (One-Motor Cable connectivity)

Designation	Description	For use with cables	Length m	Length ft.	Reference	Weight kg	Weight lb
Hybrid cable extensions for "One-Motor Cable connectivity"	Shielded cables equipped with two Quick lock M23 male/female connectors	VW3ED143R●●● cables	5	16.40	VW3EF143R050	1.320	2.91
			10	32.81	VW3EF143R100	2.370	5.22
			15	49.213	VW3EF143R150	3.300	7.28
			20	65.617	VW3EF143R200	4.460	9.83
			30	98.425	VW3EF143R300	6.550	14.44
			40	131.234	VW3EF143R400	8.640	19.05
			50	164.042	VW3EF143R500	10.730	23.66

Lexium SH3/MH3/SHS

Servo motors for Lexium 62 and Lexium 52 servo drives

Lexium SH3/MH3 servo motors: connection elements

Cable selection by motor power class (Two-Motor Cable connectivity)

Motor	Power cable	Encoder cable	Power cable cross section (UVW-PE)	Power connector	Encoder connector
SH30401	VW3E1166R●●●	VW3M8100R●●●	4x 1.0 mm²	y-tec (Power + Encoder)	
SH30402					
SH30551	VW3E1143R●●●	VW3E2094R●●●	4x 1.5 mm²	M23 8pin (power)	M23 12 pin (encoder)
SH30552					
SH30553					
SH30701					
SH30702					
SH30703					
SH31001					
SH31002					
SH31003					
SH31004					
SH31401	VW3E1144R●●●		4x 2.5 mm²		
SH31402					
SH31403	VW3E1145R●●●			1x M40 8 pin (power)	
SH31404					
SH32051	VW3E1153R●●●		4x 4.0 mm²		
SH32052					
SH32053	VW3E1154R●●●		4x 10.0 mm²		

Motor cables (Two-Motor Cable connectivity)

Designation	Description	From servo motor	To servo drive	Composition (mm²/*inch²*)	Length m	Length *ft.*	Reference	Weight kg	Weight *lb*
Motor cables	Shielded cables equipped with an M23 industrial connector (servo motor end) and a free end (servo drive end)	SH3/MH3	Lexium 52 Lexium 62	1.5/*0.002*	5	*16.404*	VW3E1143R050	1.367	*3.01*
					10	*32.808*	VW3E1143R100	2.602	*5.74*
					15	*49.213*	VW3E1143R150	3.837	*8.46*
					20	*65.617*	VW3E1143R200	5.072	*11.18*
					25	*82.021*	VW3E1143R250	6.307	*13.90*
					30	*98.425*	VW3E1143R300	7.542	*16.63*
					40	*131.234*	VW3E1143R400	10.012	*22.07*
					50	*164.042*	VW3E1143R500	12.482	*27.52*
	Shielded cables equipped with an M23 industrial connector (servo motor end) and a free end (servo drive end)	SH3/MH3	Lexium 52 Lexium 62	2.5/*0.004*	5	*16.404*	VW3E1144R050	1.712	*3.77*
					10	*32.808*	VW3E1144R100	3.292	*7.26*
					15	*49.213*	VW3E1144R150	4.872	*10.74*
					20	*65.617*	VW3E1144R200	6.452	*14.22*
					25	*82.021*	VW3E1144R250	8.032	*17.71*
					30	*98.425*	VW3E1144R300	9.612	*21.19*
					40	*131.234*	VW3E1144R400	12.772	*28.16*
					50	*164.042*	VW3E1144R500	15.932	*35.12*
	Shielded cables equipped with an M40 industrial connector (servo motor end) and a free end (servo drive end)	SH3/MH3	Lexium 52 Lexium 62	2.5/*0.004*	5	*16.404*	VW3E1145R050	1.995	*4.40*
					10	*32.808*	VW3E1145R100	3.575	*7.88*
					15	*49.213*	VW3E1145R150	5.155	*11.36*
					20	*65.617*	VW3E1145R200	6.735	*14.85*
					25	*82.021*	VW3E1145R250	8.315	*18.33*
					30	*98.425*	VW3E1145R300	9.895	*21.81*
					40	*131.234*	VW3E1145R400	13.055	*28.78*
					50	*164.042*	VW3E1145R500	16.215	*35.75*
			Lexium 52 Lexium 62	4/*0.006*	5	*16.404*	VW3E1153R050	2.513	*5.54*
					10	*32.808*	VW3E1153R100	5.000	*11.02*
					15	*49.213*	VW3E1153R150	7.413	*16.34*
					20	*65.617*	VW3E1153R200	9.870	*21.76*
					25	*82.021*	VW3E1153R250	12.313	*27.15*
					30	*98.425*	VW3E1153R300	14.763	*32.55*
					40	*131.234*	VW3E1153R400	19.663	*43.35*
					50	*164.042*	VW3E1153R500	24.563	*54.15*
			Lexium 52 Lexium 62	10/*0.016*	5	*16.404*	VW3E1154R050	4.832	*10.65*
					10	*32.808*	VW3E1154R100	9.232	*20.35*
					15	*49.213*	VW3E1154R150	13.632	*30.05*
					20	*65.617*	VW3E1154R200	18.032	*39.75*
					25	*82.021*	VW3E1154R250	22.432	*49.45*
					30	*98.425*	VW3E1154R300	26.832	*59.15*
					40	*131.234*	VW3E1154R400	35.632	*78.56*
					50	*164.042*	VW3E1154R500	44.432	*97.96*
	Shielded cables equipped with one y-tec industrial connector (servo motor end) and a free end (servo drive end)	SH3/MH3	Lexium 52 Lexium 62	[(4x 1 mm²/ *AWG 17*) + (2x 0.75 mm²/ *AWG 18*)]	3	*9.84*	VW3E1166R030	0.810	*1.786*
					5	*16.404*	VW3E1166R050	1.210	*2.668*
					10	*32.808*	VW3E1166R100	2.290	*5.049*
					15	*49.213*	VW3E1166R150	3.400	*7.496*
					25	*82.021*	VW3E1166R250	6.200	*13.669*

Lexium SH3/MH3/SHS

Servo motors for Lexium 62 and Lexium 52 servo drives

Lexium SH3/MH3 servo motors: connection elements

Encoder cables (Two-Motor Cable connectivity)

Designation	Description	From servo motor	To servo drive	Composition	Length m	Length ft.	Reference	Weight kg	Weight lb
Encoder cables (feedback)	Shielded encoder cables (Hiperface® SinCos) equipped with an M23 industrial connector (servo motor end) and an RJ45 connector with 8+2 contacts (servo drive end)	SH3/MH3	Lexium 52 Lexium 62	3x 2 x 0.14 mm² + 2x 0.34 mm²	5	*16.404*	VW3E2094R050	0.415	*0.91*
					10	*32.808*	VW3E2094R100	0.745	*1.64*
					15	*49.213*	VW3E2094R150	1.075	*2.37*
					20	*65.617*	VW3E2094R200	1.405	*3.10*
					25	*82.021*	VW3E2094R250	1.735	*3.83*
					30	*98.425*	VW3E2094R300	2.065	*4.55*
					40	*131.234*	VW3E2094R400	2.725	*6.01*
					50	*164.042*	VW3E2094R500	3.385	*7.46*
	Shielded encoder cables (Hiperface® SinCos) equipped with a y-tec industrial connector (servo motor end) and an RJ45 connector with 8+2 contacts (servo drive end)	SH3/MH3	Lexium 52 Lexium 62	3x 2 x 0.14 mm²/ *AWG 26* + 2 x 0.34 mm²/ *AWG 22*	3	*9.84*	VW3M8100R30	0.500	*1.102*
					5	*16.404*	VW3M8100R50	0.600	*1.323*
					10	*32.808*	VW3M8100R100	0.900	*1.984*
					15	*49.213*	VW3M8100R150	1.100	*2.425*
					25	*82.021*	VW3M8100R250	1.700	*3.748*

Lexium SH3/MH3/SHS

Servo motors for Lexium 62 and Lexium 52 servo drives

Lexium SH3/MH3 servo motors: connection elements

Connection description

Hybrid cables
for SH3 servo motors (One-Motor Cable connectivity)

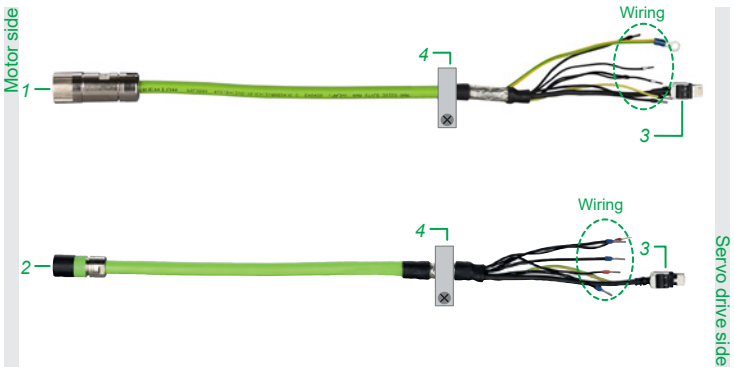

1 *Quick lock M23/M40 connector*
2 *Quick lock i-tec connector*
3 *RJ45 connector*
4 *Mounting clamp for shield connection (supplied with servo drives)*

Motor cables, Encoder cables
for SH3 and MH3 servo motors (Two-Motor Cable connectivity)

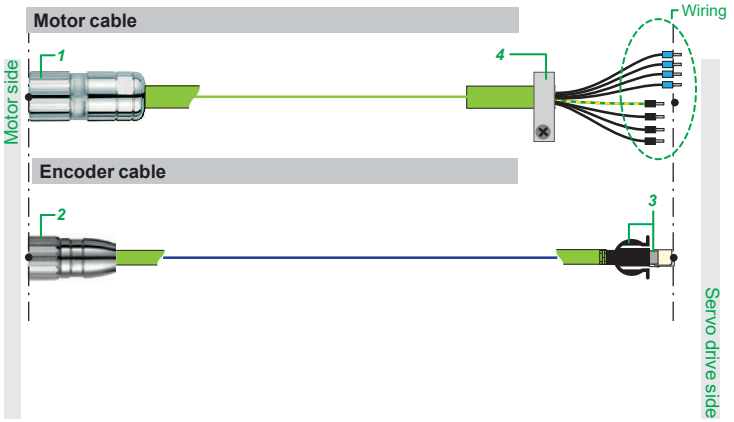

1 *M23/M40 connector*
2 *M23 signal connector*
3 *RJ45 connector*
4 *Mounting clamp for shield connection (supplied with servo drives)*

IP 67 conformity kits for Lexium MH3 servo motors

Designation	Use with	Reference	Weight kg/*lb*
Cask cover Supplied as an option to provide IP 67 degree of protection to MH3 servo motors, mounted in place of the motor backplate	MH3070●●	VW3M2301	0.100/ *0.220*
	MH3100●●	VW3M2302	0.150/ *0.331*
	MH3140●●	VW3M2303	0.300/ *0.661*
Push-in L-fitting to create a defined overpressure inside the motor	MH3190●●	*Sold by Festo AG under reference QSML-B-M3-4*	–

PF080922

VW3M2301
VW3M2302
VW3M2303

Lexium SH3/MH3/SHS

Servo motors for Lexium 62/52 servo drives

Lexium SHS servo motors

Flange: 58 mm

Flange: 71 mm

Flange: 100 mm

Presentation

Lexium SHS servo motors are stainless steel servo motors that are based on Lexium SH3 servo motors and designed for a high-torque output with relatively low current consumption in a stainless steel jacket.
Lexium SHS stainless steel servo motors and hybrid cable are the ideal choice to meet the requirements for dynamics, precision, and surroundings in the food and pharma industries.

Seven different types of Lexium SHS servo motors are available, in the following variants:

- 3 flange sizes: 58, 71, and 100 mm
- Peak Torque: 3.2 to 28.3 Nm *(2.36 to 20.87 ft-lbf)*
- Available speed: up to 6000 rpm
- Equipped with multi-turn encoder and optionally with holding brake
- Laser marking of identification label

One-Motor Cable connectivity

The range of stainless steel motors has been designed with hybrid cable to connect a motor to a servo drive based on a One-Motor Cable connectivity. The use of hybrid cables reduces effort for cable installation and cleaning.

> Applications

Lexium SHS servo motors are suitable for machines used in the food industry, which may have special requirements for materials, surfaces, soiled edges, and cleaning all parts of the machine.

> General functions

Lexium SHS servo motors offer the following features:

- Overload protection with an integrated temperature sensor (external evaluation required)
- Low moment of inertia
- Excellent dynamics
- Stainless steel surface: fewer “soiled edges”, easy cleaning (CIP), hygienic design
- Certification to CE, UL, and CSA
- Construction in accordance with EHEDG Guidelines
- Stainless steel motors are integrated in ECAM Database
- Degree of protection: IP 67 and IP 69k (shaft and housing)
- High overload capability
- Easy commissioning through electronic type plate and low maintenance
- Lexium SHS motors can be operated with Lexium 62, Lexium 52, and partly for Lexium 32.
- Suitable hybrid cables are available for each drive. See page 20

> Holding brake

The Lexium SHS servo motors (FCE200521B200, FCE200522B200 and FCE200523B200) are equipped with a failsafe electro-magnetic holding brake.

⚠ *Do not use the holding brake as a dynamic brake for deceleration, as this will quickly damage the brake.*

> Integrated encoder

Lexium SHS servo motors are fitted with a Hiperface® SinCos high-resolution multi-turn (131,072 points/turn x 4096 turns) encoder providing angular precision of the shaft position, accurate to less than ± 1.3 arc minute (*0.021°*).
This performs the following functions:

- Gives the absolute motor position to allow flow synchronization
- Measures the position information for the servo drive controller
- Sends data from the servo motor to the servo drive, which allows automatic identification of the motor when the servo drive starts

Lexium SHS servo motor – references

Technical datas

Nominal servo motor output power		Continuous stall torque		Rated torque		Peak stall torque		Rated speed		Rotor moment of inertia (without holding brake)	Reference	Weight	
Pn		M0		Mn		Mmax		Nn	Nmax	Jm			
kW	*hp*	Nm	*ft-lbf*	Nm	*ft-lbf*	Nm	*ft-lbf*	rpm	rpm	kgcm²		kg	*lb*
0.3	*0.4*	0.9	*0.66*	0.79	*0.58*	3.2	*2.4*	4000	9000	0.13	FCE200519B200 *(1)*	2.200	*4.85*
0.9	*1.2*	2.0	*1.47*	1.4	*1.03*	7.6	*5.6*	6000	8000	0.41	FCE200520B200 *(1)*	6.400	*14.11*
1.0	*1.3*	2.5	*1.84*	1.55	*1.14*	10.3	*7.6*	6000	8000	0.81	FCE200521B200 *(2)*	7.200	18.87
0.8	*1.1*	4.65	*3.42*	3.85	*2.83*	18.3	*13.5*	2000	8000	2.93	FCE200522B200 *(2)*	8.800	*19.40*
1.3	*1.7*	6.75	*4.97*	3.0	*2.21*	28.3	*20.9*	4000	6000	3.22	FCE200523B200 *(2)*	10.000	*22.05*
1.0	*1.3*	2.5	*1.84*	1.55	*1.14*	10.3	*7.6*	6000	6000	0.58	FCE200524B200 *(1)*	7.100	*15.65*
0.8	*1.1*	4.65	*3.42*	4.0	*2.95*	18.3	*13.5*	2000	6000	2.31	FCE200525B200 *(1)*	8.700	*19.18*

(1) Motor without holding brake.
(2) Motor with holding brake.

Lexium SHS servo motors – dimensions

Dimensions (overall)

Servo motors	Flange		W x H x D *(D = motor length , excluding shaft end)*	
	mm	*in.*	mm	*in.*
FCE200519B200	58 x 58	*2.3 x 2.3*	58 x 64 x 225.1	*2.3 x 2.5 x 8.9*
FCE200520B200	71 x 71	*2.8 x 2.8*	71 x 112 x 216.7	*2.8 x 4.4 x 8.5*
FCE200524B200	71 x 71	*2.8 x 2.8*	71 x 112 x 284	*2.8 x 4.4 x 11.2*
FCE200521B200	71 x 71	*2.8 x 2.8*	71 x 112 x 284	*2.8 x 4.4 x 11.2*
FCE200525B200	100 x 100	*3.94 x 3.94*	100 x 138 x 270.7	*3.94 x 5.4 x 10.7*
FCE200522B200	100 x 100	*3.94 x 3.94*	100 x 138 x 270.7	*3.94 x 5.4 x 10.7*
FCE200523B200	100 x 100	*3.94 x 3.94*	100 x 138 x 306.7	*3.94 x 5.4 x 12.1*

Lexium SHS servo motor and Lexium 62 servo drive – combinations

Lexium 62 Servo Drives					Servo motors	Motor			
Reference					Reference				
	Inom			Ipeak		Io	Inom	Ipeak	
	A @ 4 kHz	A @ 8 kHz	A @ 16 kHz	A		A	A	A	
LXM62DU60C21000 LXM62DU60D21000 LXM62DU60E21000 LXM62DU60F21000 LXM62DU60G21000	2	2	1.2	6	FCE200519B200	0.8	1.35	3.4	*(1)*
					FCE200521B200	3.6	1.9	15.2	*(1)+(2)*
LXM62DD15C21000	5	5	1.2	15	FCE200520B200	2.9	2.6	11.8	
LXM62DD15D21000	5	5	3.5	15	FCE200522B200	2.2	2.3	9.0	
LXM62DD15E21000	5	5	3.5	15	FCE200523B200	5.7	3	28.3	*(1)*
LXM62DD15F21000	5	5	3.5	15	FCE200524B200	3.6	3.8	15.2	*(1)*
LXM62DD15G21000	5	5	3.5	15	FCE200525B200	2.2	3.1	9.0	

Lexium SHS servo motor and Lexium 52 servo drive – combinations

Lexium 52 Servo drives		Servo motors	Motor		
Reference		Reference			
	Inom		Io	Inom	Ipeak
	A @ 8 kHz		A	A	A
LXM52DD12C41000	3	FCE200519B200	0.8	1.35	3.4
		FCE200520B200	2.9	2.6	11.8
		FCE200521B200	3.6	1.9	15.2
		FCE200522B200	2.2	2.3	9.0
LXM52DD18C41000	6	FCE200523B200	5.7	3	28.3
		FCE200524B200	3.6	3.8	15.2
		FCE200525B200	2.2	3.1	9.0

(1) Drive peak current lower than motor peak current
(2) Continuous torque limited by nominal drive current

Lexium SH3/MH3/SHS

Servo motors for Lexium 62/52 servo drives

Connection elements

Hybrid cables (One-Motor Cable connectivity)

Designation	Composition	Connector		Length		Reference	Weight	
		Motor side	Servo drive side	m	ft		kg	lb
Hybrid cables for Lexium SHS servo motors and Lexium 62 servo drives								
Hybrid cables (shielded motor and encoder cable)	(4x 1.5 mm²/ *0.002 in²*) + 2x (2x 0.75 mm²/*0.001 in²*) + 2x 0.34 mm²/*0.0005 in²*) + 3x (2x 0.15 mm²/*0.001 in²*)	Molex connectors	RJ45 (PD-3) connector for Encoder signal Wires for motor and holding brake connector	2	*6.56*	FCE307020A200	0.743	*1.64*
				2.5	*8.20*	FCE307025A200	0.909	*2.0*
				3	*9.84*	FCE307030A200	1.074	*2.37*
				3.5	*11.48*	FCE307035A200	1.240	*2.73*
				4	*13.12*	FCE307040A200	1.405	*3.10*
				4.5	*14.76*	FCE307045A200	1.571	*3.46*
				5	*16.40*	FCE307050A200	1.736	*3.83*
				5.5	*18.04*	FCE307055A200	1.902	*4.19*
				6	*19.69*	FCE307060A200	2.067	*4.56*
				6.5	*21.33*	FCE307065A200	2.233	*4.92*
				7	*22.97*	FCE307070A200	2.398	*5.29*
				7.5	*24.61*	FCE307075A200	2.564	*5.65*
				8	*26.25*	FCE307080A200	2.729	*6.02*
				8.5	*27.89*	FCE307085A200	2.895	*6.38*
				9	*29.53*	FCE307090A200	3.060	*6.75*
				9.5	*31.17*	FCE307095A200	3.226	*7.11*
				10.0	*32.81*	FCE307100A200	3.391	*7.48*
Hybrid cables for Lexium SHS servo motors and Lexium 52 servo drives								
Hybrid cables (shielded motor and encoder cable)	(4x 1.5 mm²/ *0.002 in²*) + 2x (2 x 0.75 mm²/*0.001 in²*) + 2x 0.34 mm²/*0.0005 in²*) + 3x (2 x 0.15 mm²/*0.001 in²*)	Molex connectors	RJ45 (PD-3) connector for Encoder signal Wires for motor and holding brake connector	2	*6.56*	FCE308020A200	0.743	*1.64*
				2.5	*8.20*	FCE308025A200	0.909	*2.0*
				3	*9.84*	FCE308030A200	1.074	*2.37*
				3.5	*11.48*	FCE308035A200	1.240	*2.73*
				4	*13.12*	FCE308040A200	1.405	*3.10*
				4.5	*14.76*	FCE308045A200	1.571	*3.46*
				5	*16.40*	FCE308050A200	1.736	*3.83*
				5.5	*18.04*	FCE308055A200	1.902	*4.19*
				6	*19.69*	FCE308060A200	2.067	*4.56*
				6.5	*21.33*	FCE308065A200	2.233	*4.92*
				7	*22.97*	FCE308070A200	2.398	*5.29*
				7.5	*24.61*	FCE308075A200	2.564	*5.65*
				8	*26.25*	FCE308080A200	2.729	*6.02*
				8.5	*27.89*	FCE308085A200	2.895	*6.38*
				9	*29.53*	FCE308090A200	3.060	*6.75*
				9.5	*31.17*	FCE308095A200	3.226	*7.11*
				10.0	*32.81*	FCE308100A200	3.391	*7.48*

Connection description

Hybrid cables (One-Motor Cable connectivity)

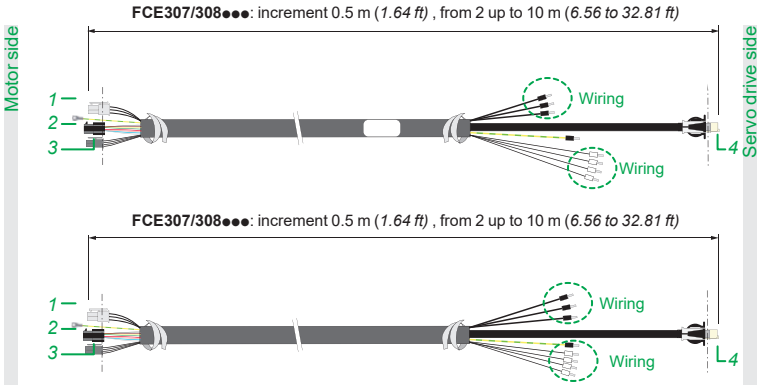

1 *Socket strip MINIFIT JR 2x2 with clip*
2 *Molex plug MICROFIT 8-pin*
3 *Socket strip MINIFIT JR 2x2 with clip*
4 *RJ45 cable plug*

Lexium SH3/MH3/SHS

Servo motors for Lexium 62/52 servo drives

Options: Holding brake, Encoder, Planetary gearboxes

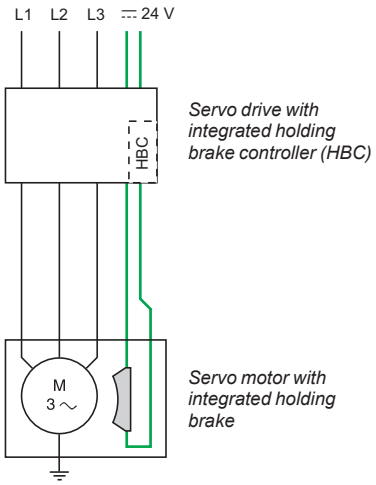

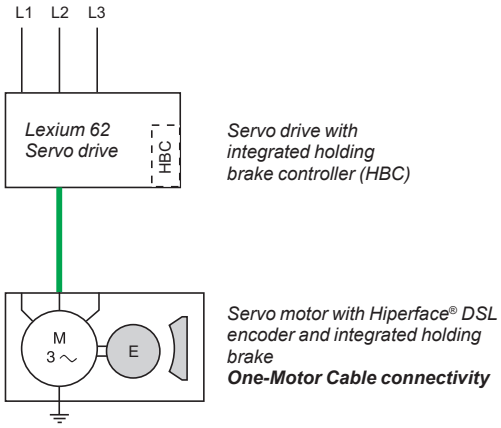

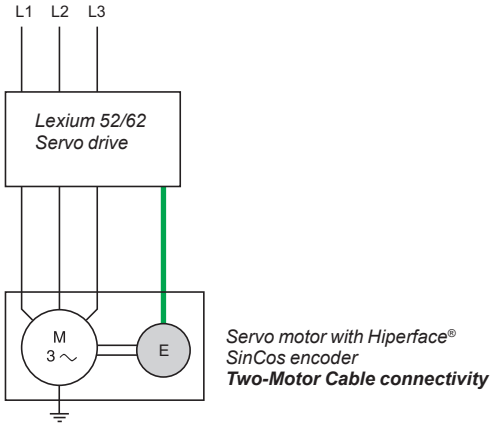

Catalog Ref. DIA3ED2160313EN

Holding Brake for Lexium SH3/MH3/SHS servo motors

The holding brake integrated in the servo motor is an electromagnetic pressure spring brake that blocks the servo motor axis once the output current has been switched off.
The standard configuration of the servo drive integrates a holding brake controller, which amplifies the braking control signal to quickly deactivate the brake.

Applications

In the event of an emergency, such as a power outage or operation of an emergency stop button, the drive is immobilized, thus significantly increasing safety.
The servo motor axis must also be blocked in the event of torque overload, such as vertical axis movement.

Encoder for Lexium SH3/MH3/SHS servo motors

Applications

This interface can be used for:

- Automatic identification of Lexium servo motor data by the servo drive
- Automatic initialization of the servo drive's control loops, to simplify installation of the motion control device

One-Motor Cable connectivity (SH3 servo motors with Lexium 62 servo drives)

The technology consists in using a single hybrid cable including Motor power, Brake and Encoder signals to connect a motor to a Lexium 62 servo drive. The use of hybrid cables reduces effort for cable installation.

Two-Motor Cable connectivity (SH3/MH3/SHS servo motors with Lexium 52 and Lexium 62 servo drives)

The standard measurement device is the Hiperface® SinCos single-turn or multi-turn encoder integrated in Lexium servo motors.
Depending on the model, single-turn and multi-turn SinCos encoders are available with medium resolution and capacitive sensing, or high resolution and optical sensing.
To select the type of Hiperface® SinCos encoder integrated in the Lexium servo motors (single-turn or multi-turn), see Servo motor references.

Planetary gearboxes for Lexium SH3/MH3 servo motors

GBX and GBY optionnal planetary gearboxes for Lexium SH3 and MH3 servo motors:
For GBX and GBY gearboxes, Please refer to our catalog Ref. DIA3ED2160313EN.
Schneider electric can supply stainless steel gearboxes for Lexium SHS servo motors:
Please contact your local sales office.

Lexium SH3/MH3/SHS

Servo motors for Lexium 62 and Lexium 52 servo drives

Product reference index

F

FCE200519B200 17
FCE200520B200 17
FCE200521B200 17
FCE200522B200 17
FCE200523B200 17
FCE200524B200 17
FCE200525B200 17
FCE307020A200 18
FCE307025A200 18
FCE307030A200 18
FCE307035A200 18
FCE307040A200 18
FCE307045A200 18
FCE307050A200 18
FCE307055A200 18
FCE307060A200 18
FCE307065A200 18
FCE307070A200 18
FCE307075A200 18
FCE307080A200 18
FCE307085A200 18
FCE307090A200 18
FCE307095A200 18
FCE307100A200 18
FCE308020A200 18
FCE308025A200 18
FCE308030A200 18
FCE308035A200 18
FCE308040A200 18
FCE308045A200 18
FCE308050A200 18
FCE308055A200 18
FCE308060A200 18
FCE308065A200 18
FCE308070A200 18
FCE308075A200 18
FCE308080A200 18
FCE308085A200 18
FCE308090A200 18
FCE308095A200 18
FCE308100A200 18

I

ILM62DDD24A1000 7, 11
ILM62DDD24B1000 7, 11
ILM62DDD24C1000 7, 11
ILM62DDD24D1000 7, 11

L

LXM52DD12C41000 7, 11, 17
LXM52DD18C41000 7, 11, 17
LXM52DD30C41000 7, 11
LXM52DD72C41000 7, 11
LXM52DU60C41000 7, 11
LXM62DC13C21000 6, 10
LXM62DC13E21000 6, 10
LXM62DD15C21000 6, 10, 17
LXM62DD15D21000 6, 10, 17
LXM62DD15E21000 6, 10, 17
LXM62DD15F21000 6, 10, 17
LXM62DD15G21000 6, 10, 17
LXM62DD27C21000 6, 10
LXM62DD27D21000 6, 10
LXM62DD27E21000 6, 10
LXM62DD27F21000 6, 10
LXM62DD27G21000 6, 10
LXM62DD45C21000 6, 10
LXM62DD45E21000 6, 10
LXM62DD45G21000 6, 10
LXM62DU60C21000 6, 10, 17
LXM62DU60D21000 6, 10, 17
LXM62DU60E21000 6, 10, 17
LXM62DU60F21000 6, 10, 17
LXM62DU60G21000 6, 10, 17

V

VW3E1143R050 13
VW3E1143R100 13
VW3E1143R150 13
VW3E1143R200 13
VW3E1143R250 13
VW3E1143R300 13
VW3E1143R400 13
VW3E1143R500 13
VW3E1144R050 13
VW3E1144R100 13
VW3E1144R150 13
VW3E1144R200 13
VW3E1144R250 13
VW3E1144R300 13
VW3E1144R400 13
VW3E1144R500 13
VW3E1145R050 13
VW3E1145R100 13
VW3E1145R150 13
VW3E1145R200 13
VW3E1145R250 13
VW3E1145R300 13
VW3E1145R400 13
VW3E1145R500 13
VW3E1153R050 13
VW3E1153R100 13
VW3E1153R150 13
VW3E1153R200 13
VW3E1153R250 13
VW3E1153R300 13
VW3E1153R400 13
VW3E1153R500 13
VW3E1154R050 13
VW3E1154R100 13
VW3E1154R150 13
VW3E1154R200 13
VW3E1154R250 13
VW3E1154R300 13
VW3E1154R400 13
VW3E1154R500 13
VW3E1166R030 13
VW3E1166R050 13
VW3E1166R100 13
VW3E1166R150 13
VW3E1166R250 13
VW3E2094R050 14
VW3E2094R100 14
VW3E2094R150 14
VW3E2094R200 14
VW3E2094R250 14
VW3E2094R300 14
VW3E2094R400 14
VW3E2094R500 14
VW3ED143R020 12
VW3ED143R030 12
VW3ED143R040 12
VW3ED143R050 12
VW3ED143R080 12
VW3ED143R100 12
VW3ED143R150 12
VW3ED143R200 12
VW3ED143R250 12
VW3ED143R300 12
VW3ED143R350 12
VW3ED143R400 12
VW3ED143R450 12
VW3ED143R500 12
VW3EF143R050 12
VW3EF143R100 12
VW3EF143R150 12
VW3EF143R200 12
VW3EF143R300 12
VW3EF143R400 12
VW3EF143R500 12
VW3M2301 15
VW3M2302 15
VW3M2303 15
VW3M8100R30 14
VW3M8100R50 14
VW3M8100R100 14
VW3M8100R150 14
VW3M8100R250 14

Life Is On | Schneider Electric

Learn more about our products at
www.schneider-electric.com

The information provided in this documentation contains general descriptions and/or technical characteristics of the performance of the products contained herein. This documentation is not intended as a substitute for and is not to be used for determining suitability or reliability of these products for specific user applications. It is the duty of any such user or integrator to perform the appropriate and complete risk analysis, evaluation and testing of the products with respect to the relevant specific application or use thereof. Neither Schneider Electric nor any of its affiliates or subsidiaries shall be responsible or liable for misuse of the information contained herein.

Design: Schneider Electric
Photos: Schneider Electric

Schneider Electric Industries SAS
Head Office
35, rue Joseph Monier - CS 30323
F-92500 Rueil-Malmaison Cedex
France

DIA7ED2160308EN
October 2020 - V5.0