Product data sheet

Specifications

miniature plug in relay, Harmony Electromechanical Relays, 12A, 2CO, without LED, with lockable test button, flat (faston type), 110V DC

RXM2AB1FD

Main

Range of product	Harmony Electromechanical Relays
Series name	RXM series
Product or component type	Plug-in relay
Relay type	Miniature relay
Contacts type and composition	2 C/O
status LED	Without
Control type	Lockable test button
[Uc] control circuit voltage	110 V DC
[Ithe] conventional enclosed thermal current	12 A
Continuous output current	10 A

Complementary

[Uimp] rated impulse withstand voltage	4 kV during 1.2/50 µs
[Ie] rated operational current	12 A at 28 V (DC) NO conforming to IEC 12 A at 250 V (AC) NO conforming to IEC 6 A at 28 V (DC) NC conforming to IEC 6 A at 250 V (AC) NC conforming to IEC 12 A at 28 V (DC) conforming to UL 12 A at 277 V (AC) conforming to UL
Minimum switching capacity	170 mW at 10 mA, 17 V
Electrical durability	100000 cycles for resistive load
Rated operational voltage limits	88...121 V DC
[Ui] rated insulation voltage	250 V conforming to IEC 300 V conforming to CSA 300 V conforming to UL
Maximum switching voltage	250 V conforming to IEC
Drop-out voltage threshold	>= 0.1 Uc
Load current	12 A at 250 V AC 12 A at 28 V DC
Operating time	20 ms
Maximum switching capacity	3000 VA/336 W
Average resistance	13440 Ohm at 20 °C +/- 10 %
Average coil consumption	0.9 W
Mechanical durability	10000000 cycles
Safety reliability data	B10d = 100000

Disclaimer: This documentation is not intended as a substitute for and is not to be used for determining suitability or reliability of these products for specific user applications

Operating rate	<= 1200 cycles/hour under load <= 18000 cycles/hour no-load
Utilisation coefficient	20 %
reset time	20 ms
Dielectric strength	1300 V AC between contacts with micro disconnection 2000 V AC between coil and contact with basic insulation 2000 V AC between poles with basic insulation
Compatibility code	RXM
Protection category	RT I
Pollution degree	3
Operating position	Any position
Test levels	Level A group mounting
Device presentation	Complete product
Contacts material	AgNi
Shape of pin	Flat (faston type)
Net weight	0.037 kg

Environment

Ambient air temperature for operation	-40…55 °C
IP degree of protection	IP40 conforming to IEC 60529
Standards	UL 508 IEC 61810-1 CSA C22.2 No 14
Product certifications	UL Lloyd's CE CSA GOST IECEE CB Scheme
Ambient air temperature for storage	-40…85 °C
Vibration resistance	3 gn, amplitude = +/- 1 mm (f = 10…150 Hz)5 cycles in operation 5 gn, amplitude = +/- 1 mm (f = 10…150 Hz)5 cycles not operating
Shock resistance	10 gn for in operation 30 gn for not operating

Packing Units

Unit Type of Package 1	PCE
Number of Units in Package 1	1
Package 1 Height	2.200 cm
Package 1 Width	2.800 cm
Package 1 Length	4.900 cm
Package 1 Weight	36.000 g
Unit Type of Package 2	BB1
Number of Units in Package 2	10
Package 2 Height	3.400 cm
Package 2 Width	10.500 cm
Package 2 Length	12.700 cm

Package 2 Weight	385.000 g
Unit Type of Package 3	S01
Number of Units in Package 3	120
Package 3 Height	15.000 cm
Package 3 Width	15.000 cm
Package 3 Length	40.000 cm
Package 3 Weight	4.893 kg

Contractual warranty

Warranty	18 months

Environmental Data

Schneider Electric aims to achieve Net Zero status by 2050 through supply chain partnerships, lower impact materials, and circularity via our ongoing “Use Better, Use Longer, Use Again” campaign to extend product lifetimes and recyclability.

Environmental Data explained

How we assess product sustainability

Environmental footprint

Total lifecycle Carbon footprint	15
Environmental Disclosure	Product Environmental Profile

Use Better

Materials and Substances

Packaging made with recycled cardboard	Yes
Packaging without single use plastic	Yes
EU RoHS Directive	Pro-active compliance (Product out of EU RoHS legal scope)
REACh Regulation	REACh Declaration
California proposition 65	WARNING: This product can expose you to chemicals including: Nickel compounds, which is known to the State of California to cause cancer, and Di-isodecyl phthalate (DIDP), which is known to the State of California to cause birth defects or other reproductive harm. For more information go to www.P65Warnings.ca.gov

Use Again

Repack and remanufacture

End of life manual availability	End of Life Information
Take-back	No

Dimensions Drawings

Dimensions

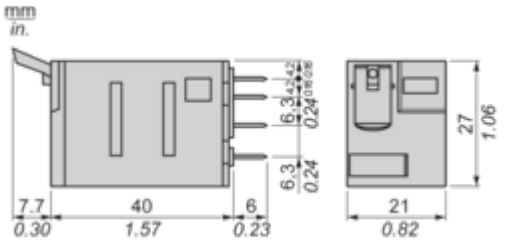

Pin Side View

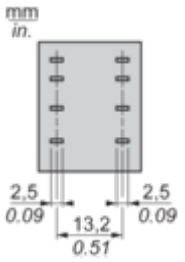

Connections and Schema

Wiring Diagram

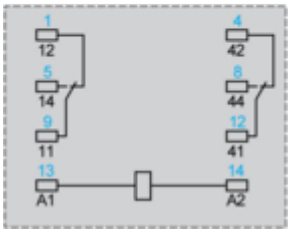

Symbols shown in blue correspond to Nema marking.

Performance Curves

Electrical Durability of Contacts

Durability (inductive load) = durability (resistive load) x reduction coefficient.
Resistive AC load

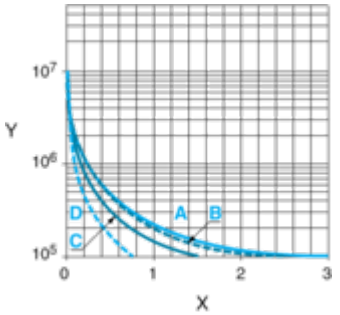

X Switching capacity (kVA)
Y Durability (Number of operating cycles)
A RXM2AB•••
B RXM3AB•••
C RXM4AB•••
D RXM4GB•••

Reduction coefficient for inductive AC load (depending on power factor cos ϕ)

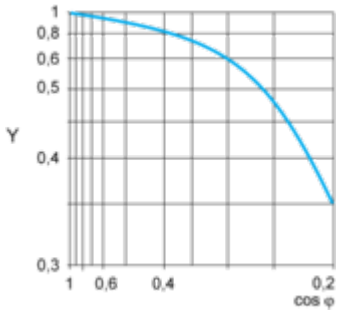

Y Reduction coefficient (A)

Maximum switching capacity on resistive DC load

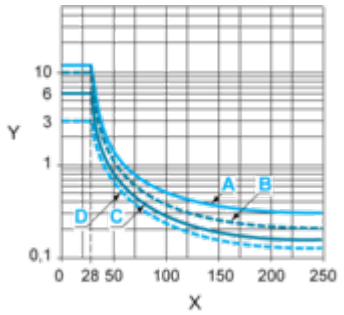

X Voltage DC
Y Current DC
A RXM2AB•••
B RXM3AB•••
C RXM4AB•••
D RXM4GB•••
Note : These are typical curves, actual durability depends on load, environment, duty cycle, etc.
For inductive load, to increase relay life cycles, please add a proper load protection circuit (eg: RC protection/Varistor/ free Wheeling diode -DC load only-).
For low level loads (below 10mA), we recommend to use RXM*GB series with bifurcated contacts relays instead.

Coil Operating Range

DC Coil Operating Range VS Ambient Temperature

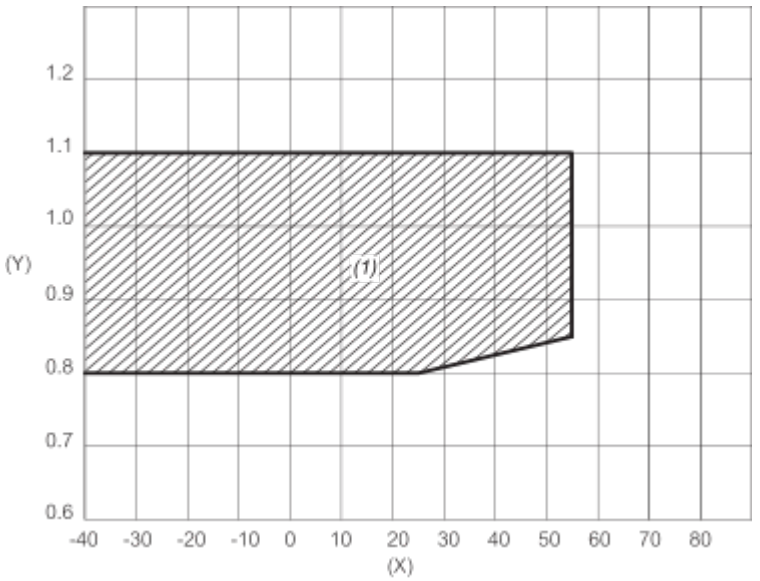

X : Ambient temperature (°C)
Y : AC coil voltage (U/Uc)
(1) Permitted operating range area

Technical Illustration

Dimensions

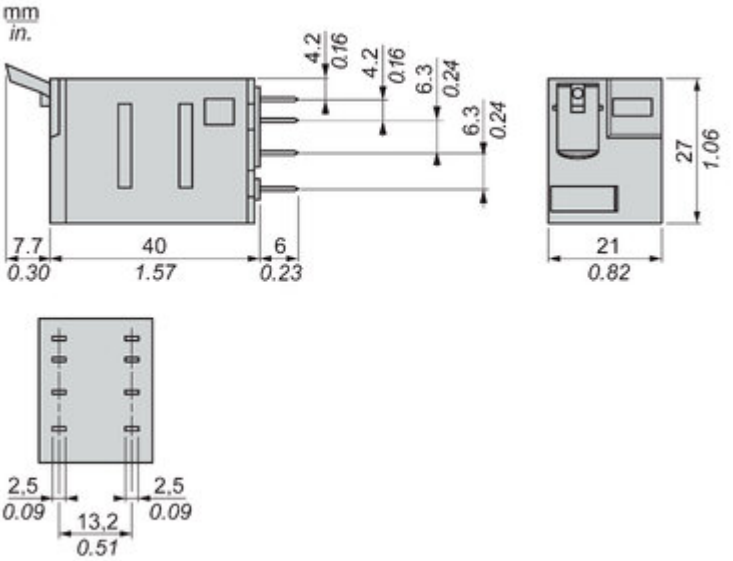

Image of product / Alternate images

Alternative

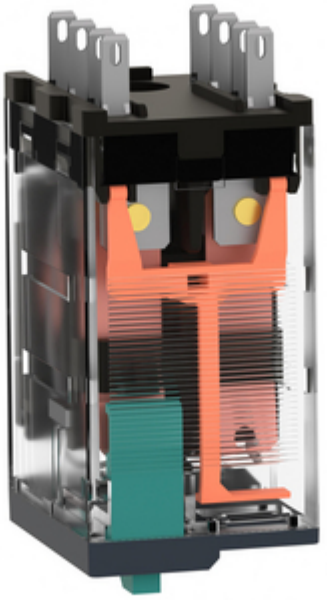

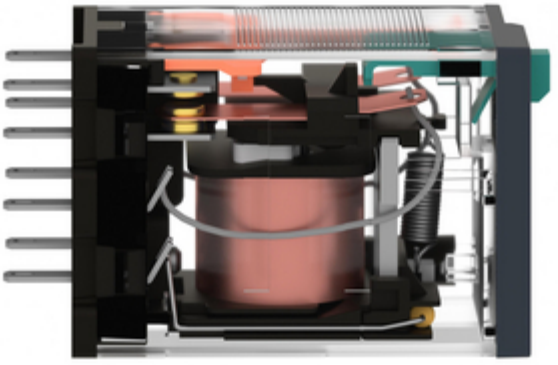

RXM
Schneider
Electric

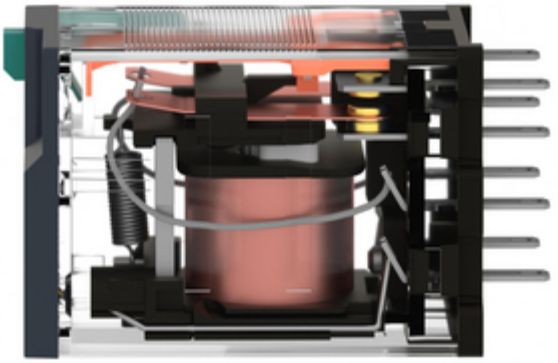

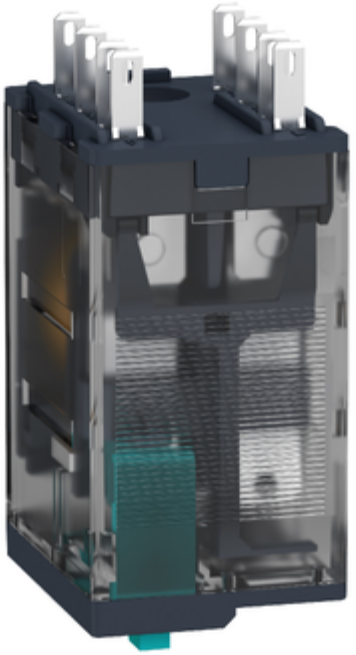

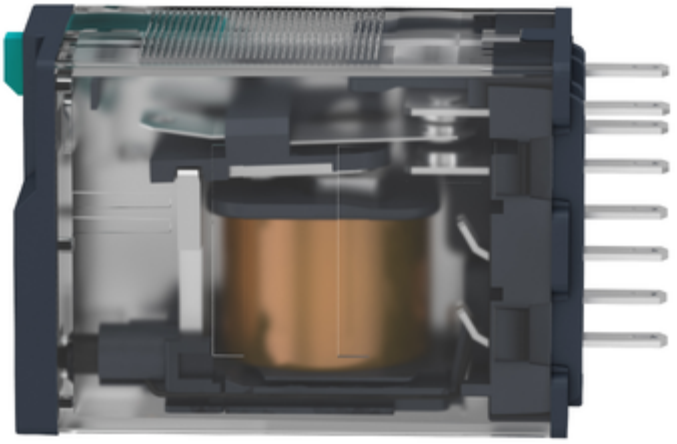

1
4
5
8
9
12
13
14

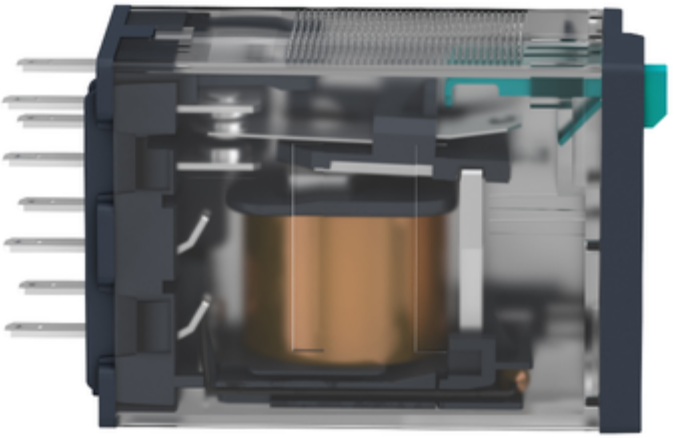

RXM
24 VDC
Schneider
Electric