EcoStruxure™
Innovation At Every Level

PowerLogic™ P3

Catalog 2024

Network Protection Relays

se.com/PowerLogic P3

Life Is On | Schneider Electric

Note: Electrical power systems are dangerous, protection relays are defined and governed by international standards such as IEC 60255 “Measuring relays and protective equipment” and IEEE C37.97 “Protective relay applications to power systems buses”. Never attempt to install or operate protection relays or associated equipment without the necessary qualifications, training, and tools. Exposure to electrical arc-flash incidents can be life threatening, no situation can ever be deemed fully safe. Standards such as NFPA 70E define important risk categorization and such standards identify both distance from, and energy of the arc incident to be important factors. In order to reduce the risk category and improve safety during arc-flash incidents, functionality is available in PowerLogic™ P3 protection relays: i) to operate electrical panel from a safer distance via wireless communication, and ii) arc-flash protection functionality to detect and limit the arc energy by tripping the connected circuit breaker faster than in a conventional protection scheme.

Notice: This Catalog is for illustration purpose only. All connections mentioned in this document must be made as instructed in the User Manuals.

General Contents

PM106568

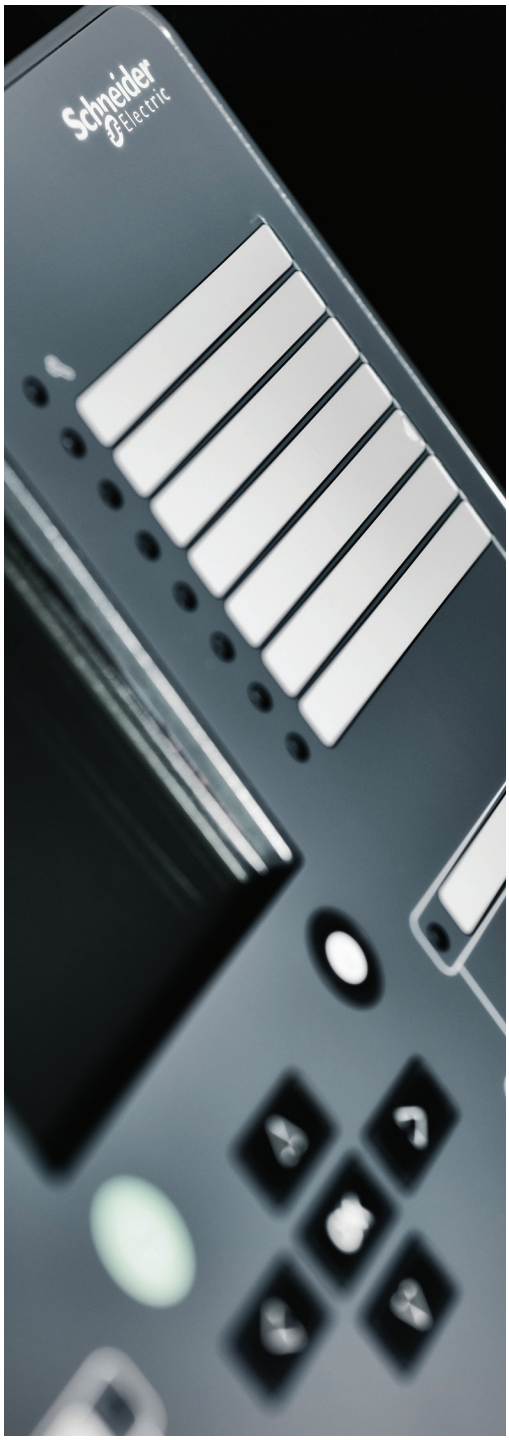

PowerLogic™ P3 Range Description 6

PowerLogic™ P3 Standard 32

PowerLogic™ P3 Advanced 52

PowerLogic™ Digital Experience 82

Additional Modules and Accessories 90

Schneider Electric Service 106

Ordering 114

Take the PowerLogic™ P3 Further with EcoStruxure

EcoStruxure, Schneider Electric's IoT-enabled, open and interoperable architecture and platform, brings together Connected Products, Edge Control, and Apps, Analytics & Services. EcoStruxure connected products deliver enhanced value around safety, reliability, efficiency, sustainability, and connectivity.

450000

EcoStruxure systems deployed since 2007 with the support of our 9000 system integrators

EcoStruxure Ready

Efficient asset management
Boost your efficiency and reduce downtime using predictive maintenance tools

24/7 connectivity
Make better informed decisions with real-time data that's available everywhere, anytime

Enhanced safety
Advanced features designed-in based on well-known designs, experience and technology

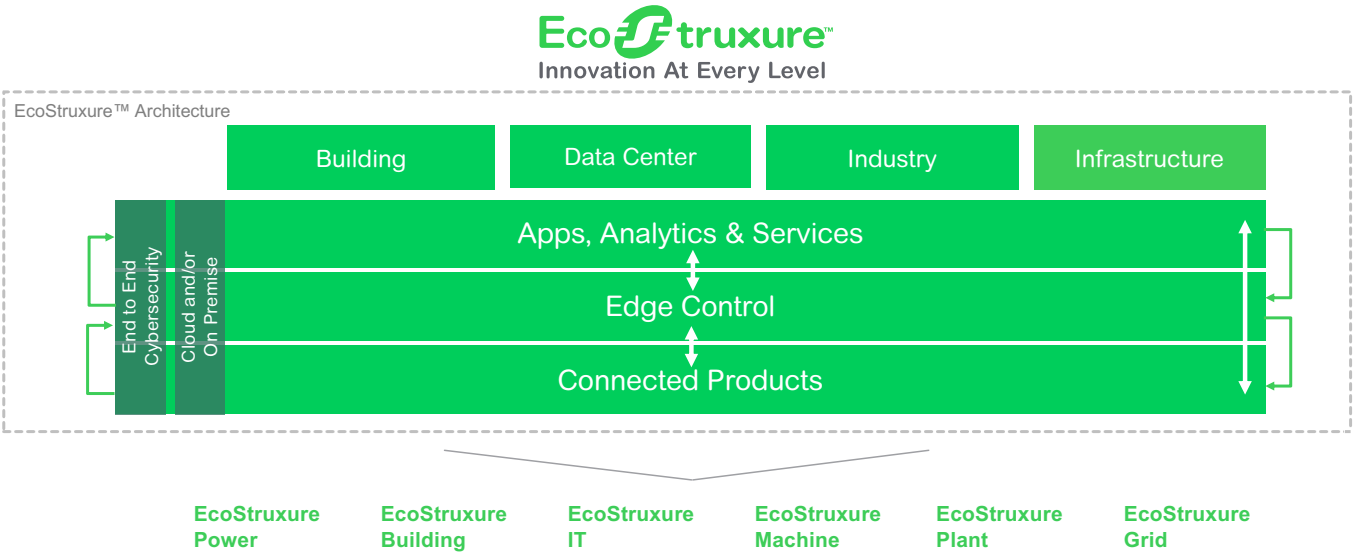

Life Is On | Schneider Electric

PowerLogic™ P3 at a Glance

What is PowerLogic P3?

PowerLogic P3 is a complete range of protection relays for medium voltage applications, including feeder, motor, transformer, and generator protection. It embeds all the latest communication protocols on serial or Ethernet links.

Based on more than 100 years of experience in network protection relays, PowerLogic P3 benefits from the reliability of Sepam, MiCOM and Vamp.

Unparalleled Efficiency

- Simple selection and ordering with EcoReal MV
- Simplified configuration with the new eSetup Easergy Pro setting tool
- Faster delivery with on-the-shelf availability of standard configurations

Better Connectivity

- Simpler operation and maintenance with the EcoStruxure™ Power Device app
- 9 communication protocols in one box, including IEC 61850
- Increased number of inputs and outputs for more possibilities

Enhanced Safety

- Embedded arc protection
- Built-in virtual injection testing
- Compliant with international standards (i.e., IEC 60255-1)

Range overview

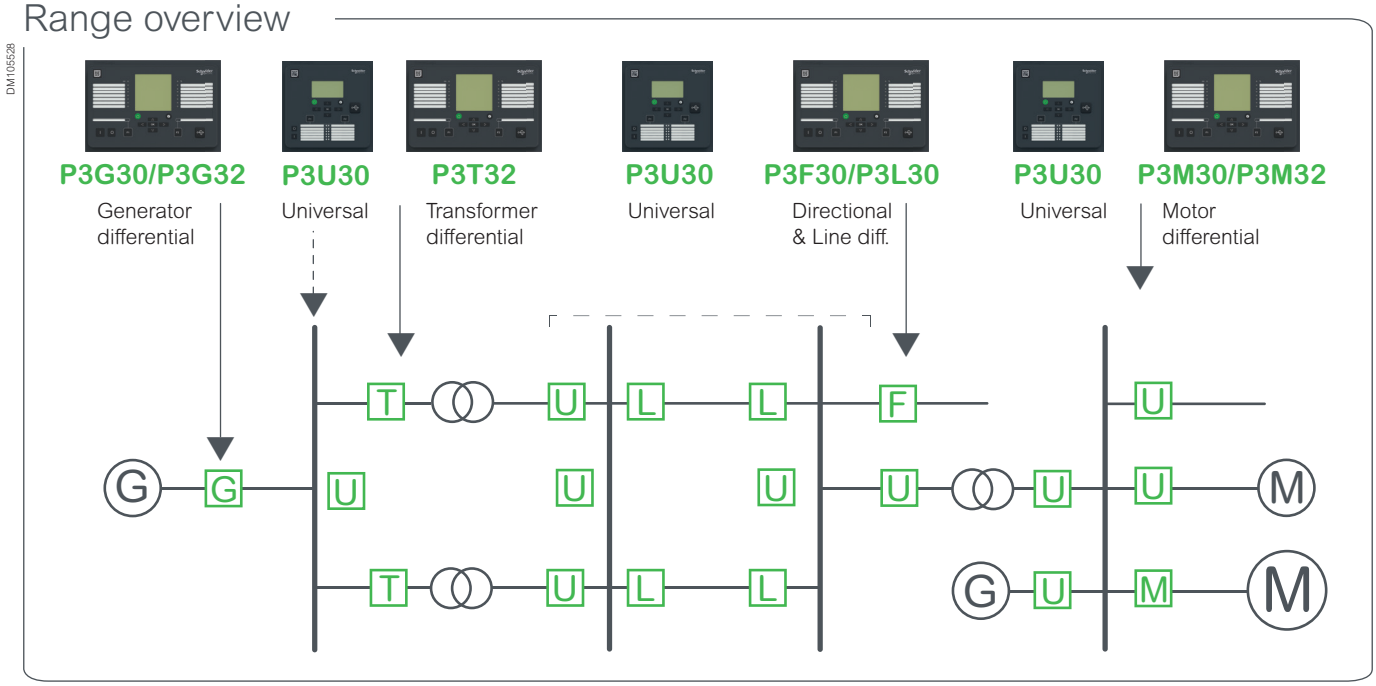

PowerLogic™ P3 Range Description

PowerLogic™ P3 Range Description

Overview	8
Selection Guide	9
Selection Guide by Application	12
Arc Flash Application	12
Feeder/Incomer Application	13
Motor Application	15
Transformer Application	16
Generator Application	18
Capacitor Application	20
Communication - Examples of Network Architectures	21
Application	28

Overview

PM106572

PowerLogic™ P3 Standard

PM106574

PowerLogic™ P3 Advanced

PowerLogic P3 is a family of digital protection relays for distribution networks dedicated to:

- **Buildings and Industry:**
  - Retail
  - Hotels
  - Healthcare
  - Education and research
  - Transportation
  - Industrial buildings
  - Data Center
- **Utilities - Energy distribution**
- **Large sites:**
  - Oil and Gas
  - Mining
  - Mineral and Metals
  - Water

PowerLogic P3 protection relay is based on proven technology concepts and developed in close cooperation with customers, so it's built to meet your toughest demands. It's available in two sizes to best fit your needs:

- The PowerLogic™ P3 Standard combines protection functions such as directional earth fault for feeder and motor protection in a one-box solution.
- The PowerLogic™ P3 Advanced features a modular design that allows user-defined conventional protection and arc flash protection solutions in both new and existing power distribution systems.

PowerLogic products are designed to be user friendly, a feature that is proven in our customer reports day after day. You'll benefit from features that include:

- A complete set of protection functions, related to the application
- Arc detection (PowerLogic™ P3 Advanced)
- Dedicated circuit breaker control with single-line diagram, push buttons, programmable function key and LEDs, and a customizable alarm
- Multilingual HMI for customized messaging
- Settings tool relay management software for setting parameters, configuring, and network fault simulation
- Both serial and Ethernet communication, including redundancy
- IEC 61850 standard Ed.1 & Ed.2

Life Is On Schneider Electric

Selection Guide

PowerLogic™ P3 contains Two main devices, each with specific functions to address your needs in a one-box design, regardless of application.		PowerLogic™ P3 Standard		PowerLogic™ P3 Advanced	
			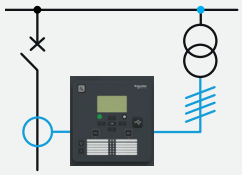	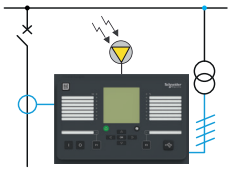	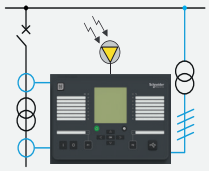
Feeder		P3**U20** with O/C with directional E/F	P3**U30** with directional O/C with voltage protection	P3**F30** with directional P3**L30** line differential	-
Transformer				-	P3**T32** with differential
Motor				P3**M30**	P3**M32** with differential
Generator				P3**G30**	P3**G32** with differential
Characteristics					
Measuring inputs	Phase current	1/5A CT or LPCT (x3) (5)		1/5A CT or LPCT (x3) (5)	1/5A CT (x6)
	Residual current	1/5A CT or 0.2/1A CT or CSH 2A/20A		(1/5A+0.2/1A) CT (1/5A + CSH 2/20A)	2 x (1/5A+0.2/1A) CT, 1 x (1/5A) CT
	Voltage	VT (x1)	VT (x4) or LPVT (x4) (5)	VT (x4) or LPVT (x4) (5)	VT (x4)
Arc-flash sensor input		-		Loop sensor: 1 Point sensor: 2, 4 or 6 (1) (2)	Loop sensor: 1 Point sensor: 2, 4 or 6 (1)
Digital	Input	10/8	14/16	6 to 36	6 to 16
	Output	5/8 + SF	11/8 + SF	10 to 21 + SF	10 to 13 + SF
Analogue	Input	0 or 4 (1)		0 or 4 (1)	
	Output	0 or 4 (1)		0 or 4 (1)	
Temperature sensor input		0 or 8 or 12 (1)		0 or 8 or 12 (1)	
Front port		USB type B		USB type B	
Nominal power supply		24 Vdc or 24...48 Vdc (20 ... 57 Vdc) or 48...240 Vdc/ac (39...265 V dc/ac) (4)		24...48 Vdc (20 ... 57 Vdc) or 110...240 Vdc/ac (88...265 V dc/ac)	
Ambient temperature, in service		-40...60 °C (-40...140 °F)		-40...60 °C (-40...140 °F)	
Communication					
Rear ports RS232, IRIG/B, RS485, Ethernet		●	●	●	●
Protocols	IEC61850 ed1 & ed2	●	●	●	●
	IEC 60870-5-101 & 103	●	●	●	●
	DNP3 over Ethernet	●	●	●	●
	DNP3 serial	●	●	●	●
	Modbus serial	●	●	●	●
	Modbus over Ethernet	●	●	●	●
	Ethernet IP (6)	●	●	●	●
	Profibus DP	●	●	●	●
	SPAbus	●	●	●	●
Redundancy protocols (RSTP/PRP)		●	●	●	●
Others					
Control		4 objects 4 displays	4 objects 8 displays	8 objects 3-8 display	
Logic (Matrix + Logic equation)		●		●	
Withdrawable CT connector with shorting		●		-	
Remote HMI		-		●	
Hardware dimensions (W/H/D)		171 x 176 x 214(3) mm/6.73 x 6.93 x 8.43 in		264 x 177 x 208 mm/10.39 x 6.97 x 8.19 in	

(1) Depends on optional module
(2) P3L30 can have 1 loop or 2-point sensors only
(3) 226 mm (8.90 in) with ring-lug connectors
(4) Check the available power supply range from the device's serial number label
(5) LPCT and LPVT for P3U30, P3F30, P3M30 relays only
(6) Consult us for availability

Selection Guide

		Feeder (P3U)		Motor (P3U)		Advanced (P3x)						
		P3U20	P3U30	P3U20	P3U30	P3F30	P3L30	P3M30	P3M32	P3G30	P3G32	P3T32
Protection functions	**ANSI code**											
Under-impedance	21G	-	-	-	-	-	-	-	-	2	2	-
Fault locator	21FL	-	1	-	1	1	1	-	-	-	-	-
Overfluxing	24	-	-	-	-	-	-	-	-	1	1	1
Synchro-check	25	-	2	-	2	2	2	2	2	2	2	2
Undervoltage	27	-	3	-	3	3	3	3	3	3	3	3
Positive sequence undervoltage	27P	-	-	-	-	-	-	-	-	2	2	-
Directional active under/ reverse power	32R/32L	-	2	-	2	2	2	2	2	2	2	-
Phase undercurrent	37	1	1	1	1	-	-	1	1	-	-	-
Temperature monitoring	38/49T	12 (1)(2)	12 (2)	12 (1)(2)	12 (2)	12 (2)	12 (2)	12 (2)	12 (2)	12 (2)	12 (2)	12 (2)
Loss of field	40	-	-	-	-	-	-	-	-	1	1	-
Under-reactance	21/40	-	-	-	-	-	-	-	-	2	2	-
Negative sequence overcurrent (motor, generator)	46	-	-	2	2	-	-	2	2	2	2	2
Incorrect phase sequence	46	-	-	1	1	-	-	1	1	-	-	-
Cur. unbalance, broken conductor	46BC	1	1	-	-	1	1	-	-	-	-	-
Negative sequence overvoltage protection	47	-	3	-	3	3	3	3	3	3	3	3
Excessive start time, locked rotor	48/51LR	-	-	1	1	-	-	1	1	-	-	-
Thermal overload	49	1	1	1	1	1	1	1	1	1	1	1
Phase overcurrent	50/51	3	3	3	3	3	3	3	3	3	3	3
Earth fault overcurrent	50N/51N	5	5	5	5	5	5	5	5	5	5	5
Breaker failure	50BF	1	1	1	1	1	1	1	1	1	1	1
Switch On To Fault (SOTF)	50HS	1	1	1	1	1	1	1	1	1	1	1
Capacitor bank unbalance	51C	2	2	2	2	2	2	2	2	2	2	2
Voltage dependent overcurrent	51V	-	1	-	1	1	1	-	-	1	1	-
Overvoltage	59	-	3	-	3	3	3	3	3	3	3	3
Capacitor overvoltage	59C	1	1	-	-	1	1	-	-	-	-	-
Neutral voltage displacement	59N	3	3	3	3	2	2	2	2	2	2	2
CT supervision	60	1	1	1	1	1	1	1	1	1	2	2
VT supervision	60FL	-	1	-	1	1	1	1	1	1	1	1
Restricted earth fault (high imped.)	64REF/64BEF	1	1	1	1	1	1	1	1	1	1	1
Restricted earth fault (low imped.)	64REF	-	-	-	-	-	-	-	1	-	1	1
Stator earth fault	64S	-	-	-	-	-	-	-	-	1	1	-
Frequent start inhibition	66	-	-	1	1	-	-	1	1	-	-	-
Directional phase overcurrent	67	-	4	-	4	4	4	4	4	4	4	4
Directional earth-fault o/c	67N	3	3	3	3	3	3	3	3	3	3	3
Transient intermittent	67NI	1	1	-	-	1	1	-	-	-	-	-
Magnetizing inrush detection	68F2	1	1	1	1	1	1	1	1	1	1	1
Fifth harmonic detection	68H5	1	1	1	1	1	1	1	1	1	1	1
Pole slip	78PS	-	-	-	-	-	-	-	-	1	1	-
Vector Shift	78 VS	-	1	-	-	-	-	-	-	-	-	-
Auto-recloser	79	5	5	-	-	5	5	-	-	-	-	-
Over or under frequency	81	-	2/2	-	2/2	2/2	2/2	2/2	2/2	2/2	2/2	2/2
Rate of change of frequency	81R	-	1	-	1	1	1	1	1	1	1	1
Under frequency	81U	-	3	-	3	3	3	3	3	3	3	3
Lockout	86	1	1	1	1	1	1	1	1	1	1	1
Line differential	87L	-	-	-	-	-	2	-	-	-	-	-
Motor/Generator differential	87M/87G	-	-	-	-	-	-	-	2	-	2	-
Transformer differential	87T	-	-	-	-	-	-	-	-	-	-	2
Programmable stages	99	8	8	8	8	8	8	8	8	8	8	8
Arc-flash detection (AFD)		-	-	-	-	8	8	8	8	8	8	8
Cold load pick-up (CLPU)		1	1	1	1	1	1	1	1	1	1	1
Programmable curves		3	3	3	3	3	3	3	3	3	3	3
Setting groups (3)		4	4	4	4	4	4	4	4	4	4	4

(1) Temperature sensors optional for P3U20
(2) Using external RTD module
(3) Not all protection functions have 4 setting groups. See details in the manual.

Life Is On Schneider Electric

Selection Guide

	Feeder & Motor (P3U)		Advanced (P3x)						
Control functions	**P3U20**	**P3U30**	**P3F30**	**P3L30**	**P3M30**	**P3M32**	**P3G30**	**P3G32**	**P3T32**
Switchgear control and monitoring	1/6	6	8	8	8	8	8	8	8
Switchgear monitoring only	2	2	2	2	2	2	2	2	2
Programmable switchgear interlocking	●	●	●	●	●	●	●	●	●
Local control on single-line diagram	●	●	●	●	●	●	●	●	●
Local control with O/I keys	●	●	●	●	●	●	●	●	●
Local/remote function	●	●	●	●	●	●	●	●	●
Function keys	2	2	2	2	2	2	2	2	2
Custom logic (logic equations)	●	●	●	●	●	●	●	●	●
Control with Mobile application	●	●	●	●	●	●	●	●	●
Measurement									
RMS current values	●	●	●	●	●	●(1)	●	●(1)	●(1)
RMS voltage values	●	●	●	●	●	●	●	●	●
RMS active, reactive, and apparent power	-	●	●	●	●	●	●	●	●
Frequency	●	●	●	●	●	●	●	●	●
Fundamental frequency current values	●	●	●	●	●	●(1)	●	●(1)	●(1)
Fundamental frequency voltage values	-	●	●	●	●	●	●	●	●
Fundamental frequency active, reactive, and apparent power values	-	●	●	●	●	●	●	●	●
Power factor	-	●	●	●	●	●	●	●	●
Energy values active and reactive	-	●	●	●	●	●	●	●	●
Energy transmitted with pulse outputs	-	●	●	●	●	●	●	●	●
Demand values: phase currents	●	●	●	●	●	●	●	●	●
Demand values: active, reactive, apparent power and power factor	-	●	●	●	●	●	●	●	●
Min and max demand values: phase currents	●	●	●	●	●	●	●	●	●
Min and max demand values: RMS phase currents	●	●	●	●	●	●	●	●	●
Min and max demand values: active, reactive, apparent power and power factor	-	●	●	●	●	●	●	●	●
Maximum demand values over the last 31 days and 12 months: active, reactive, apparent power	-	●	●	●	●	●	●	●	●
Minimum demand values over the last 31 days and 12 months: active, reactive power	-	●	●	●	●	●	●	●	●
Max and min values: currents	●	●	●	●	●	●	●	●	●
Max and min values: voltages	●	●	●	●	●	●	●	●	●
Max and min values: frequency	●	●	●	●	●	●	●	●	●
Max and min values: active, reactive, apparent power and power factor	-	●	●	●	●	●	●	●	●
Harmonic values of phase current and THD	●	●		●	●	●(1)	●	●(1)	●(1)
Harmonic values of voltage and THD	-	●	●	●	●	●	●	●	●
Voltage sags and swells	-	●	●	●	●	●	●	●	●
Logs and Records									
Sequence of event record	●	●	●	●	●	●	●	●	●
Disturbance record	●	●	●	●	●	●	●	●	●
Tripping context record	●	●	●	●	●	●	●	●	●
Monitoring functions									
Trip circuit supervision (ANSI 74)	1	1	1	1	1	1	1	1	1
Circuit breaker monitoring	1	1	1	1	1	1	1	1	1
Relay monitoring	●	●	●	●	●	●	●	●	●

(1) Function available on both sets of CT inputs

Selection Guide by Application

Arc Flash Application

Busbar arc protection

• Arc protection, activated by overcurrent and light signals, or light signals alone

Centralized busbar arc protection

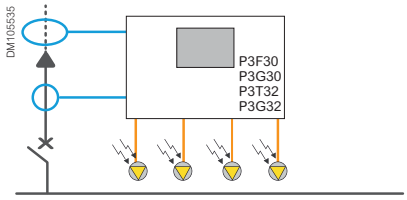

• Up to 4 light point sensors to monitor the busbar

De-centralized busbar arc protection

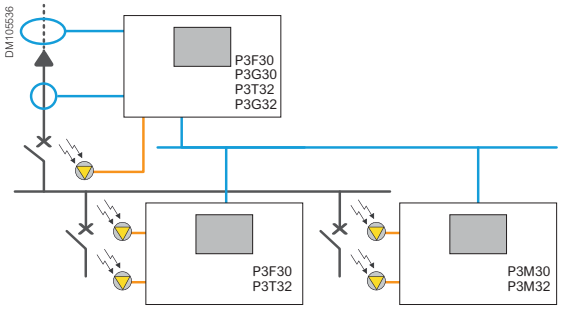

• Up to 4 light point sensors in each relay

• Transmission of light detection signals via digital I/O or IEC 61850 GOOSE messages

Zone arc protection

• Up to 8 arc protection stages in each relay

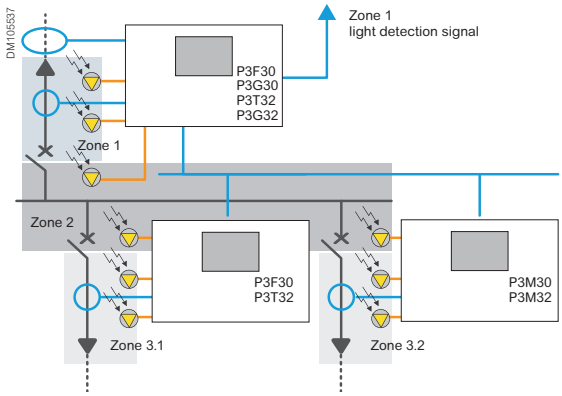

• Light detection in zone 1:
signal sent to upstream relay for tripping

• Light detection in zone 2:
incomer PowerLogic™ P3 trips, if fault confirmed by overcurrent

• Light detection in zone 3:
corresponding outgoing PowerLogic™ P3 trips, if fault confirmed by overcurrent

Life Is On Schneider Electric

Selection Guide by Application

Feeder/Incomer Application

Outgoing protection

- **Feeder overcurrent protection**
- **Feeder overload protection**

Protection of low-capacitance feeders in impedance-earthed or solidly-earthed neutral systems

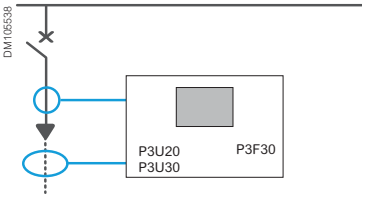

- Feeder earth-fault overcurrent

Protection of high-capacitance feeders in impedance-earthed or compensated or isolated neutral systems

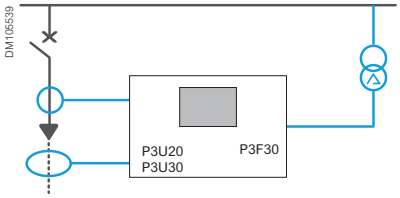

- Directional earth-fault overcurrent
- Transient intermittent earth-fault

Protection of feeders with metering

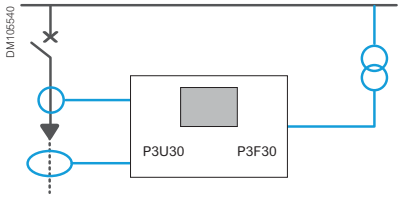

- Power and energy measurement
- Min and max demand values over the last 31 days and 12 months

Incomer protection

- **Busbar overcurrent protection**

Incomer protection without voltage monitoring

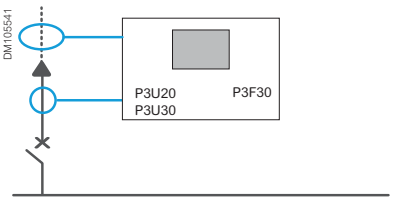

- Earth-fault overcurrent

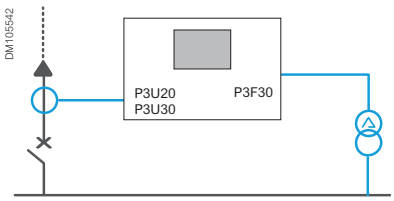

- Neutral voltage displacement protection for isolated system

Incomer protection with voltage and frequency monitoring

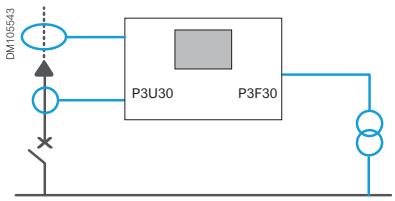

- Under/over voltage
- Frequency, rate of change of frequency

Incomer protection with power quality monitoring

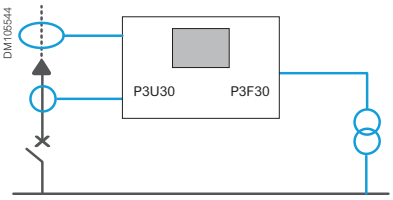

- Voltage and frequency min and max values
- Voltage harmonic values and THD
- Voltage sags and swells

Parallel incomer protection

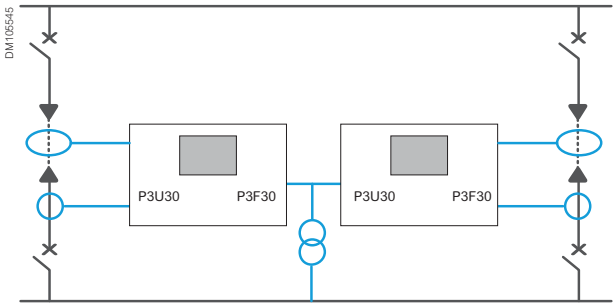

- Directional phase overcurrent
- Directional earth-fault overcurrent

Selection Guide by Application

Feeder/Incomer Application

Line protection

- **Overcurrent and earth-fault protection (directional and non-directional)**
- **Feeder overload protection**

Overhead line protection	Incomer protection with fault locator	Line protection with line differential
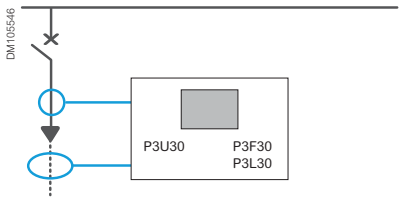	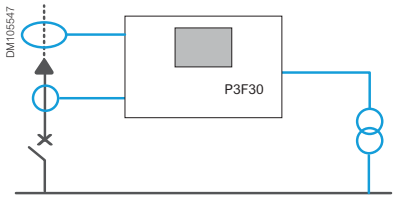	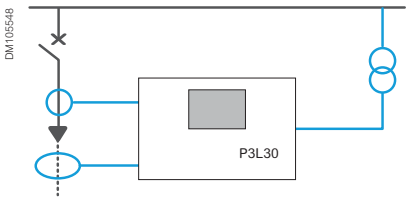
• Recloser • Feeder fault locator	• Incomer fault locator	• Line differential protection

Life Is On Schneider Electric

Selection Guide by Application

Motor Application

Motor protection

- **Motor overcurrent and earth-fault overcurrent**
- **Thermal overload**
- **Motor start-up supervision**
- **Motor restart inhibition**

Motor protection without voltage monitoring

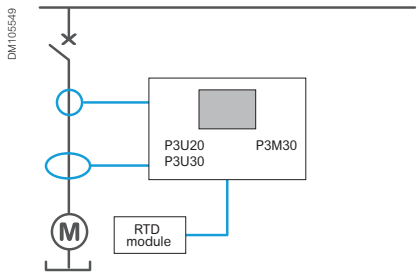

- Temperature measurement (Stator, bearings)

Motor protection with voltage monitoring

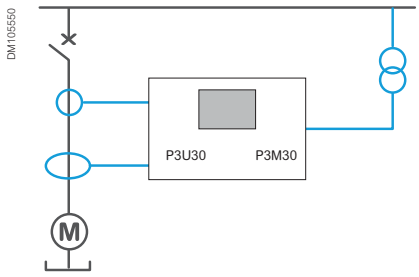

- Undervoltage protection

Motor protection with differential function

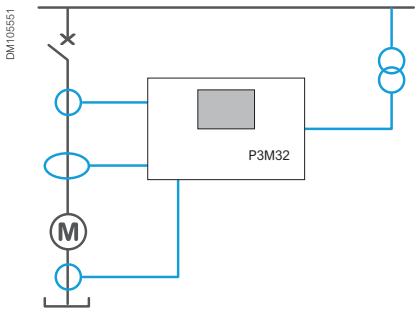

- Differential protection

Selection Guide by Application

Transformer Application

Transformer feeder protection

- **Transformer overcurrent and earth-fault overcurrent protection**
- **Thermal overload protection**
- **External trip from thermostat/Buchholz**

Transformer feeder protection

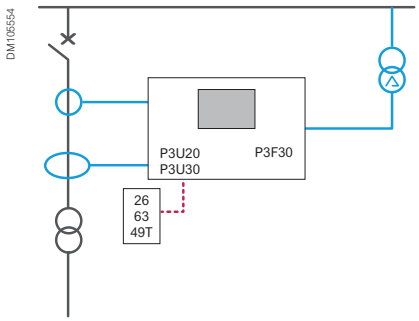

- Directional earth-fault overcurrent for impedance earthed or compensated neutral systems

Transformer feeder protection without voltage monitoring

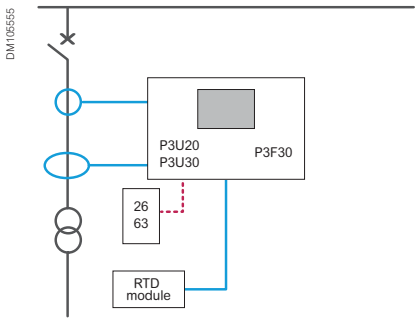

- Temperature measurement (ambient, oil)

Transformer feeder protection with voltage monitoring

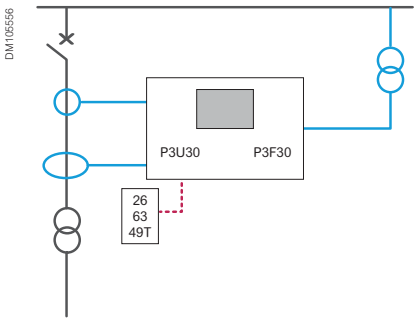

- Over and undervoltage protection

Transformer feeder protection with additional current measurement

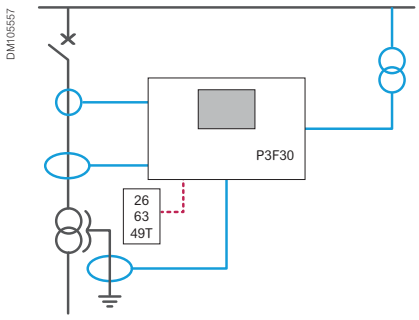

- Tank earth-leakage protection

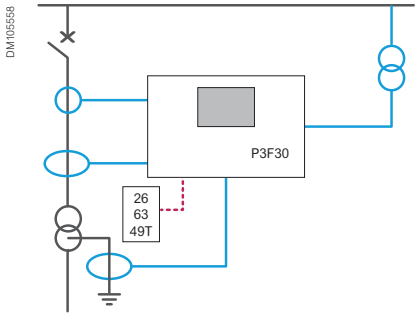

- Earth-fault overcurrent on the secondary side

Transformer feeder protection with differential function

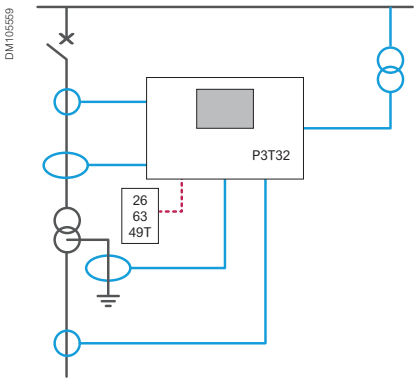

- Differential protection
- Restricted earth-fault protection (high impedance)

Life Is On Schneider Electric

Selection Guide by Application

Transformer Application

Transformer incomer protection

- **Busbar overcurrent protection**
- **Inter-trip from primary CB protection**

Transformer incomer protection without voltage monitoring

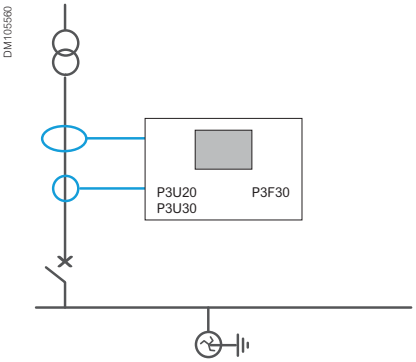

- Transformer earth-fault overcurrent

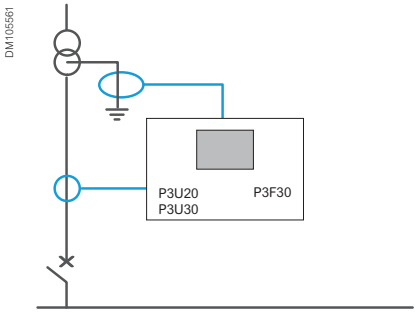

- Earth-fault overcurrent for transformer and back-up protection

Transformer feeder protection with voltage monitoring

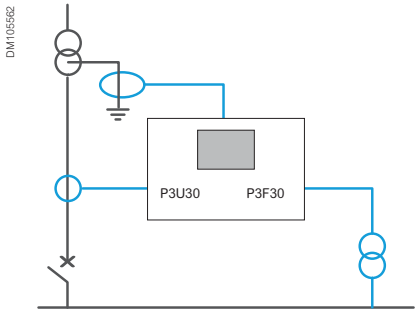

- Over and undervoltage protection
- Power and energy measurement
- Min and max demand values over the last 31 days and 12 months

Parallel transformer incomer protection

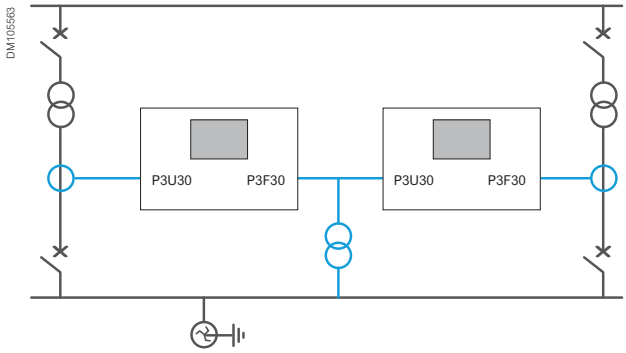

- Directional phase overcurrent

Transformer incomer protection with differential function overcurrent

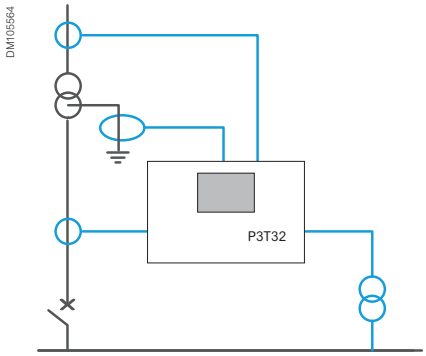

- Transformer differential overcurrent
- Restricted earth-fault overcurrent (high impedance)

Selection Guide by Application

Generator Application

Small generator transformer unit protection

- **Overcurrent protection of the supplied network**
- **Voltage and frequency monitoring**
- **External trip from thermostat/Buchholz**

Protection of a stand-alone generator-transformer unit

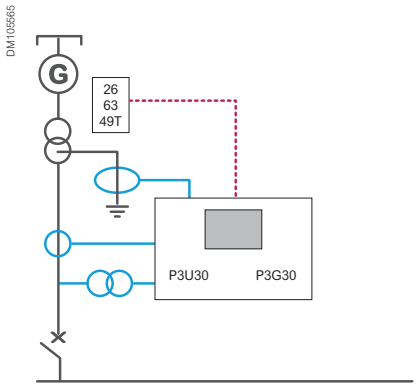

- Earth-fault overcurrent protection of the supplied network
  Note: monitoring of generator insulation must be ensured by another device

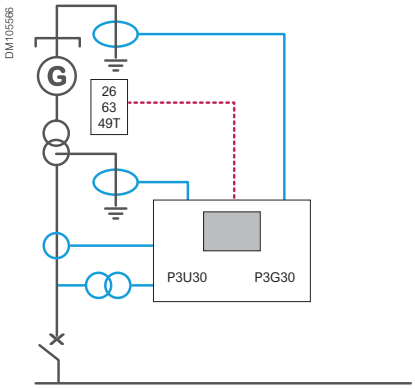

- Earth-fault overcurrent protection of the generator
- Earth-fault overcurrent protection of the supplied network

Protection of a generator-transformer unit coupled to another source

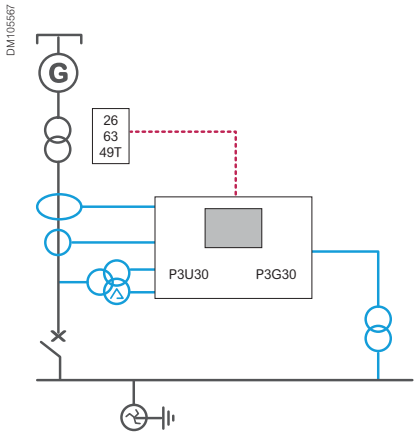

- Earth-fault overcurrent protection of the transformer
- Neutral voltage displacement to detect transformer earth-fault when CB is open
- Synchro-check
  Note: monitoring of generator insulation must be ensured by another device

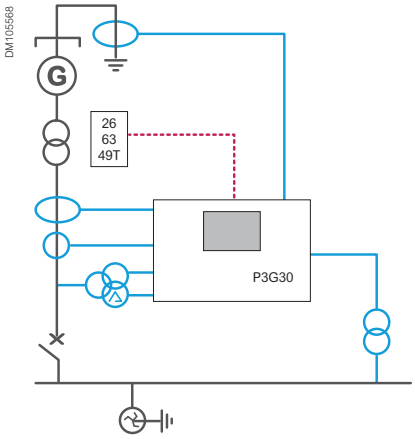

- Earth-fault overcurrent protection of the generator and the transformer
- Neutral voltage displacement to detect transformer earth-fault when CB is open
- Synchro-check

Life Is On Schneider Electric

Selection Guide by Application

Generator Application

Mid-size generator protection

- **Under-impedance**
- **Loss of field**
- **Voltage and frequency monitoring**

Protection of a generator coupled to another source

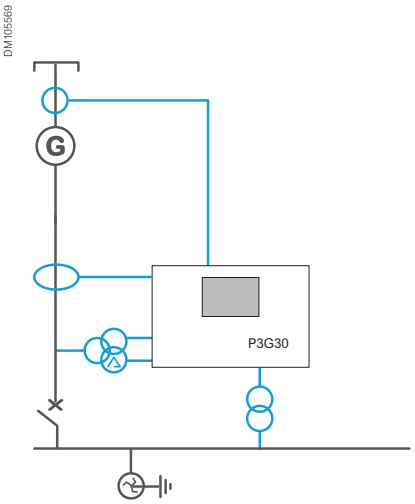

- Earth-fault overcurrent protection of the generator when coupled
- Neutral voltage displacement to detect generator earth-fault when CB is open
- Synchro-check

Generator protection with differential function

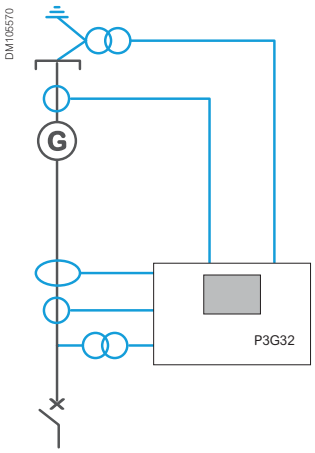

- Stator earth-fault detection
- Differential protection

Generator-transformer unit protection with differential function

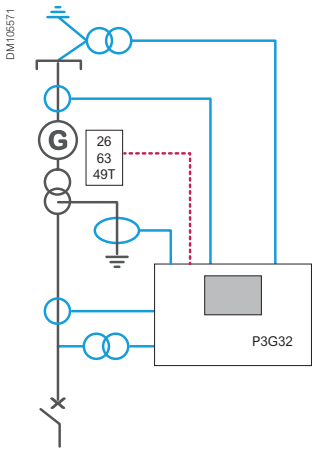

- Stator earth-fault detection
- Differential protection
- Restricted earth-fault protection (high impedance)

Selection Guide by Application

Capacitor Application

Capacitor bank protection

- **Capacitor bank overcurrent and earth-fault protection**
- **Capacitor bank overload protection**

Capacitor bank protection without voltage monitoring

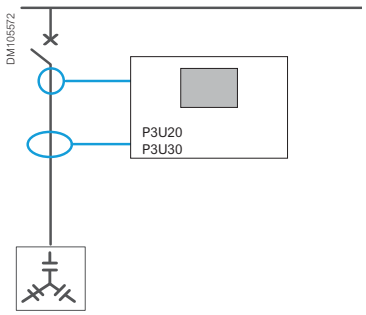

- Capacitor overvoltage protection, based on current measurement and harmonics
- Current harmonic values and THD

Capacitor bank protection with voltage monitoring

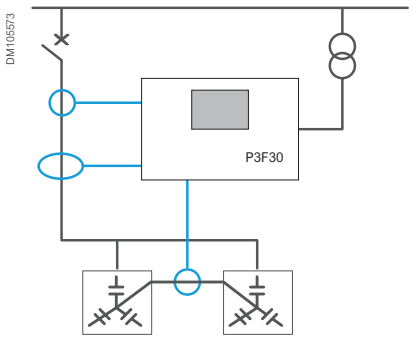

- Capacitor bank unbalance
- Overvoltage
- Current and voltage harmonic values and THD

Protection of harmonic filters

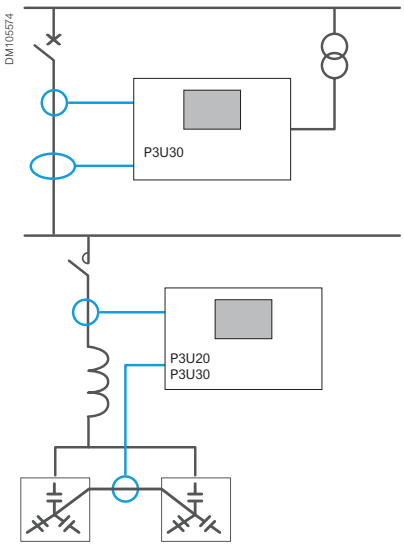

- Overvoltage
- Capacitor bank unbalance
- Capacitor overvoltage protection, based on current measurement and harmonics
- Current harmonic values and THD

Life Is On Schneider Electric

Communication

SCADA System

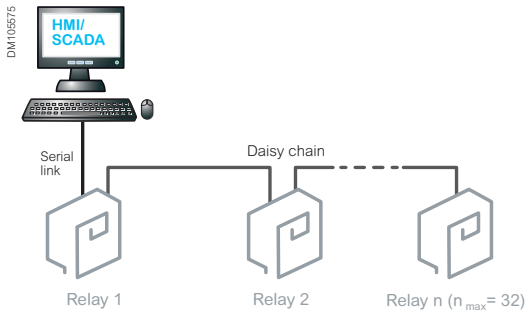

Connection to SCADA using Serial Line

This architecture allows you to connect HMI/SCADA to a set of PowerLogic protection relays using a multi-drop serial communication link with client-server communication.

Available protocols:

- Modbus RTU
- IEC 60870-5-101
- IEC 60870-5-103
- DNP3
- Profibus
- SPAbus

Time synchronization protocol:

- IRIG-B
- Minute pulse

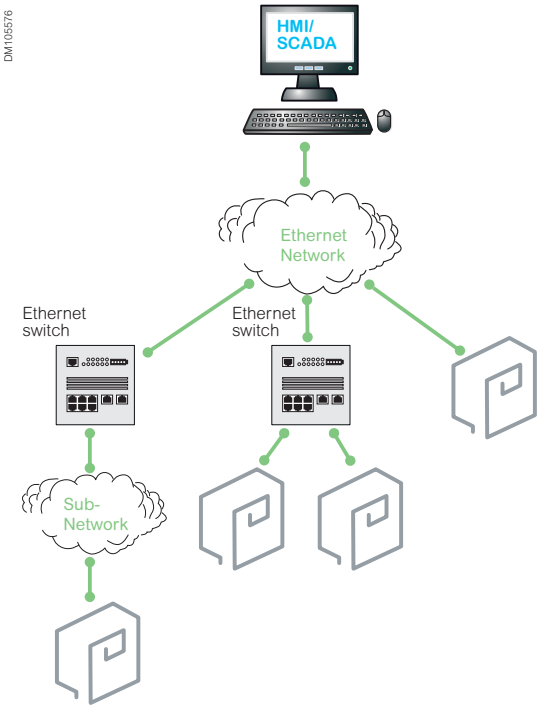

Connection to SCADA using Ethernet

This architecture allows you to connect a set of PowerLogic protection relays directly to an Ethernet network.

Available protocols:

- IEC 61850
- IEC 60870-5-101
- DNP3
- Modbus
- EtherNet/IP

Note: It is possible to mix on the same Ethernet network the IEC 61850 protocol with any of the 4 other protocols.

This allows you to use the GOOSE messages between relays together with another protocol for communication to SCADA.

It is also possible to connect an PowerLogic relay to 2 different control systems, using the same Ethernet communication port and IEC 61850 protocol for one of them and any available protocol for the other one.

The PowerLogic P3 relay handles the IEC 61850 station bus, in compliance with standards IEC 61850-6, 7-1, 7-2, 7-3, 7-4 and 8-1 Ed.1 or Ed.2, according to configuration.

Other available Ethernet protocols:

- FTP for file transfer
- SNTP for time synchronization
- HTTP for web server

Communication

Example of Communication

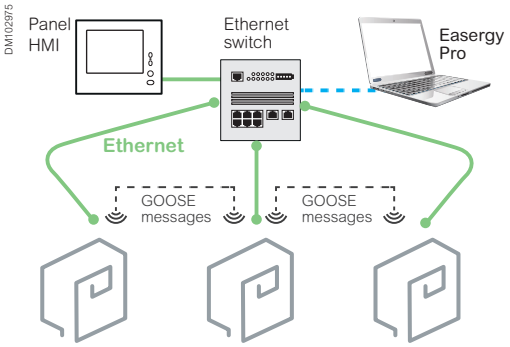

Architecture Example 1

Switchboard internal network

This architecture allows fast GOOSE communication between PowerLogic protection relays of the switchboard, thus avoiding costly wiring. Typical uses are logic discrimination, load shedding, etc.

In addition, a panel HMI featuring a web browser can be used to monitor and control the entire switchboard.

A spare connection on the panel Ethernet switch can also be provided for connecting the Easergy Pro.

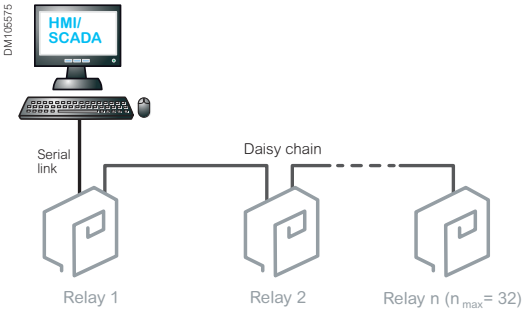

Architecture Example 2

Connection to SCADA using serial lines and legacy protocols

This architecture allows you to connect HMI/SCADA to a set of PowerLogic protection relays using a multi-drop serial communication link with client-server communication protocols such as Modbus-RTU, DNP3, or IEC 61870-5-103.

The RS485 serial communication port of the PowerLogic protection relay enables simple daisy chaining wiring thanks to its 2 RJ45 connectors, suited for 2-wire or 4-wire cabling. A termination module is plugged into the last connection. As an alternative, the fiber optic serial communication port can be used.

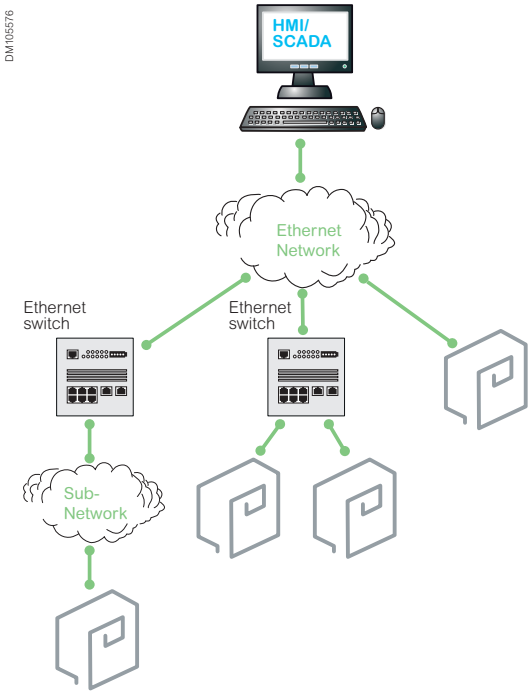

Architecture Example 3

Connection to HMI/SCADA using Ethernet with redundant paths

When using an Ethernet infrastructure for the system network, redundant paths are often created. This is usually a deliberate action to improve communication availability, but can also result from non-mastered and overly complicated network architectures.

Redundant paths, however, can result in loops that are not compatible with normal Ethernet operation because they permit frames to propagate endlessly, inducing a phenomenon known as "frame storm." Using such network topologies therefore requires the use of special management techniques.

Life Is On Schneider Electric

Communication

SCADA System

DM105577

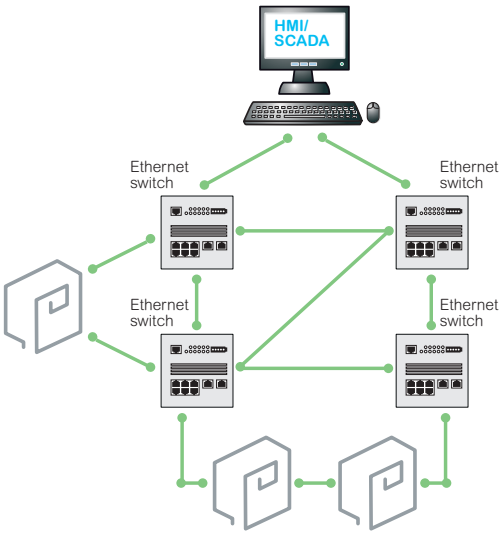

RSTP (Rapid Spanning Tree Protocol)

The principle of RSTP is to virtually cut all links that are not necessary at a given time, changing the meshed topology into a tree topology.

The main advantage of RSTP is that it is widespread and works on any network topology. On the other hand, RSTP takes seconds to reconfigure the network in case of network interruption.

Do not connect more than 10-15 relays in one RSTP loop.

DM105578

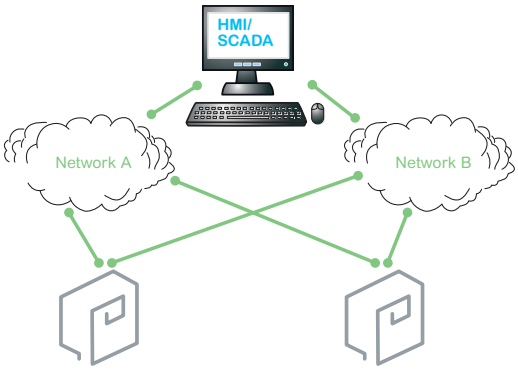

PRP (Parallel Redundancy Protocol)

The principle of PRP is to transmit frames in parallel on two independent network infrastructures: A and B.

The receiving device is in charge of eliminating the redundant frame if it is received.

PRP features a 0 ms recovery time in case of lost of failed frame.

PRP is supported by PowerLogic P3 relays.

Communication

Data Exchanged between PowerLogic™ P3 and SCADA

Ethernet Ports

Protocol	IEC 61850	Ethernet/IP	FTP
Real-time data			
Measurement	●	●	-
Alarms and status	●	●	-
Controls	●	●	-
Time-stamped events	●	●	-
Historical data			
Disturbance records	●	-	●
Setting management			
Setting group change	●	●	-

Serial Ports

Protocol	IEC 60870-5-103	Profibus	SPAbus
Real time data			
Measurement	●	●	●
Alarms and status	●	●	●
Controls	●	●	●
Time-stamped events	●	●	●
Historical data			
Disturbance records	●	-	-
Sequence of event record files	●	-	-
Setting management			
Setting group change	●	●	●
Settings	-	-	●

Life Is On Schneider Electric

Communication

Data Exchanged between PowerLogic™ P3 and SCADA

Ethernet or Serial Ports

Protocol	DNP3	IEC 60870-5-101	Modbus
Real-time data			
Measurement	•	•	•
Alarms and status	•	•	•
Controls	•	•	•
Time-stamped events	•	•	•
Setting management			
Setting group change	•	•	•

Communication

Engineering System and System Configuration

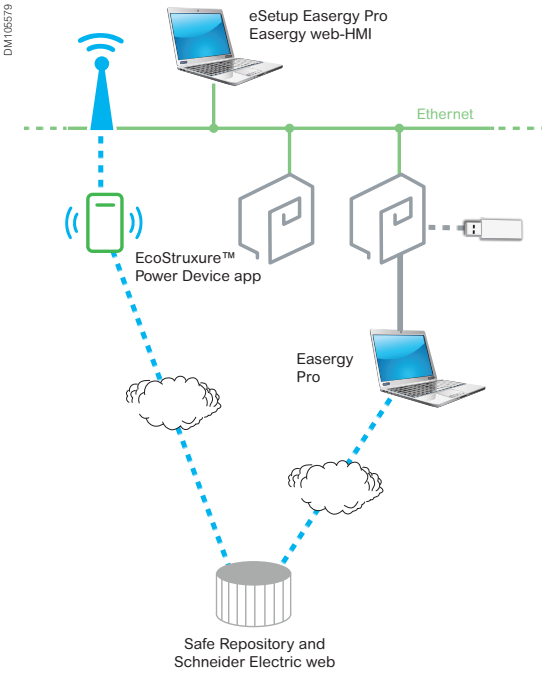

Engineering System

eSetup Easergy Pro

eSetup Easergy Pro can be connected to a single PowerLogic protection relay on the front USB port or to a group of PowerLogic protection relays via Ethernet.

eSetup Easergy Set allows you to prepare the configuration of the relay without having any physical relay. For this purpose, eSetup Easergy Pro provides the latest version of the configuration description file directly from the web.

EcoStruxure™ Power Device app

EcoStruxure™ Power Device app can be connected to the PowerLogic protection relays using a Wi-Fi router.

EcoStruxure™ Power Device app is also connected to the safe repository, allowing you to access to documents and store files downloaded from the relay.

PowerLogic web-HMI

In addition to eSetup Easergy Pro, most of the resources of the relay can be accessed with a standard web browser, using the web pages embedded into the relay.

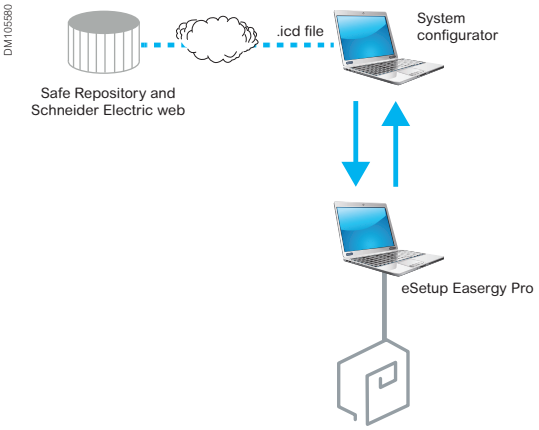

System Configuration according to IEC 61850

The methodology described in IEC 61850-6 standard can be applied with PowerLogic protection relays to build a protection and control system based on this standard.

.icd file

When the configuration of an PowerLogic protection relay is done, setting tool can generate IED capability file. This file can be used by the system configurator.

Note: Configure maximum 2 clients for the IEC 61850 application.

Life Is On Schneider Electric

Communication

Arc Flash Protection System by Network Communication

Arc Flash Protection System: Application Example

In this application example, the arc flash sensor for zone 4.1 is connected to Device 1. If the arc flash sensor awakens and simultaneously Device 3 sends a current signal, the zone 4.1 is isolated by the outgoing feeder breaker.

The arc flash sensor for zone 4.2 is connected to Device 2 and operates the same way.

The arc flash sensors for zone 3 are connected to Device 1, 2, or 3. If a sensor awakens in zone 3, the light-only signal is transferred to Device 3, which then trips the main circuit breaker.

An eventual arc flash fault in zone 1 or 2 does not necessarily activate the current element in Device 2. However, arc detection can be achieved by using the light-only principle. If an arc flash occurs in cable termination, zone 1, or zone 2, the fault is cleared by the upstream circuit breaker.

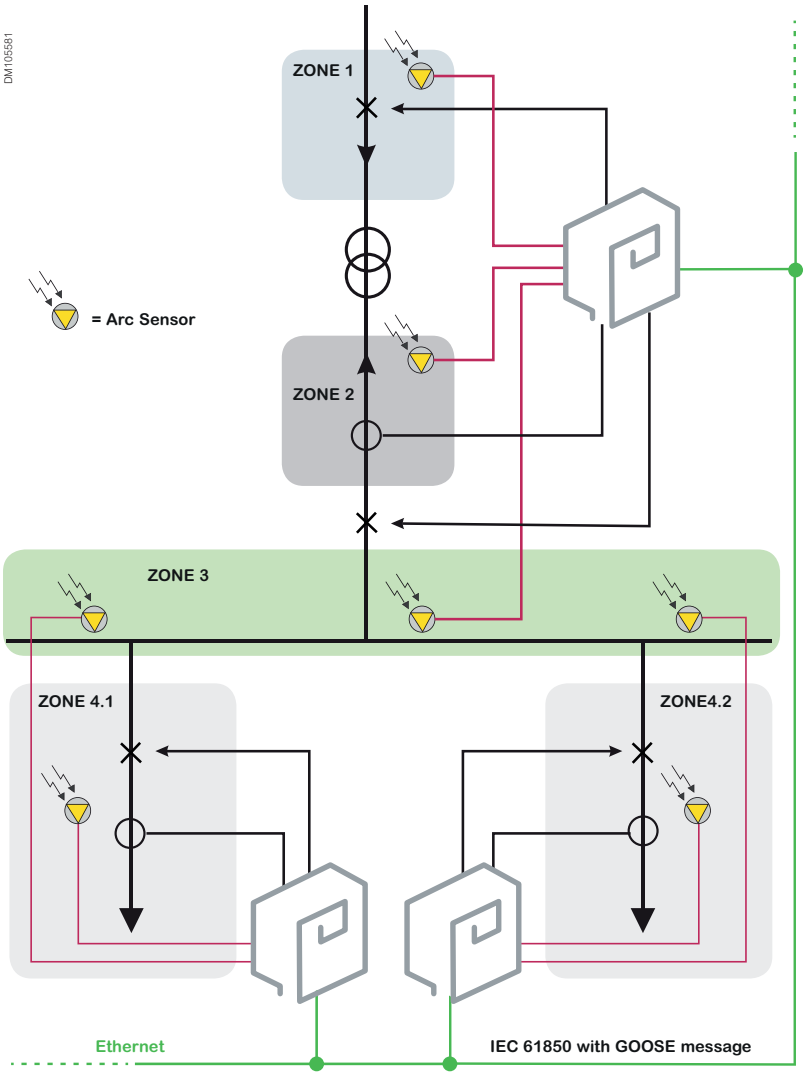

Application

Arc Flash Detection Application

Arc Flash Detection Application Example IEC

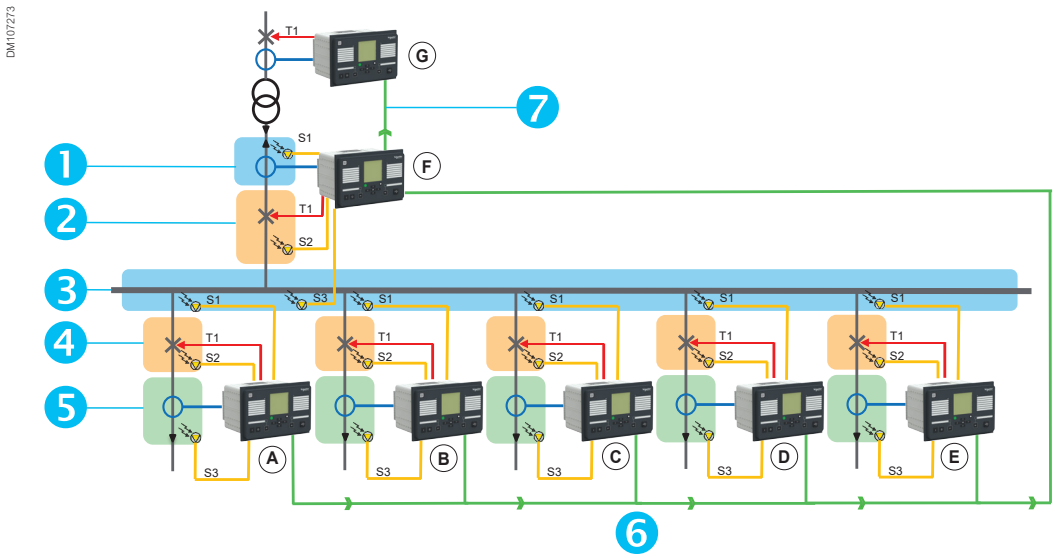

1. Incomer cable zone
2. Incomer circuit breaker zone
3. Busbar zone
4. Feeder circuit breaker zone
5. Feeder cable zone
6. Light information via BIO L> (feeder cable and circuit breaker)
7. Light information via BIO L> (incomer busbar and circuit breaker)

In this application example, the arc flash sensor for zone 5 is connected to device **A**. If the sensor detects a fault and simultaneously, device **A** detects an overcurrent signal, zone 5 is isolated by the outgoing feeder breaker.

The arc flash sensor for the second feeder zone 5 is connected to device **B**, and it operates the same way. The arc flash sensors for zones 3 and 4 are connected to device **A**, **B**, **C**, **D**, **E** and **F**. If a sensor detects a fault in zone 3 or 4, the light-only signal is transferred to device **F** which also detects the overcurrent and then trips the main circuit breaker.

An arc flash fault in zone 1 or 2 does not necessarily activate the current detection in device **F**. However, arc flash detection can be achieved by using the light-only principle, or alternatively, the light detection signal can be transferred to device G. If an arc flash occurs in the cable termination or incomer circuit breaker in zone 1 or 2, the fault is cleared by an overcurrent signal.

Life Is On Schneider Electric

Application

Arc Flash Detection Application

Arc Flash Detection Application Example IEC with Fiber

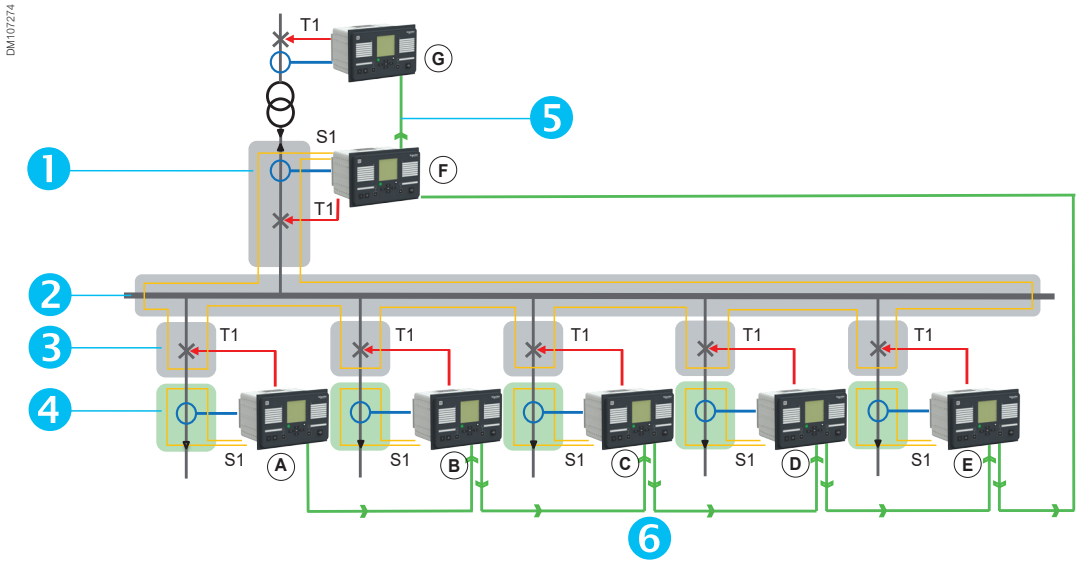

1. Incomer cable zone
2. Busbar zone
3. Feeder circuit breaker zone
4. Feeder cable zone
5. Light information via BIO L> (incomer busbar and circuit breaker)
6. Light information via BIO L> (feeder cable and circuit breaker)

The fiber-loop arc flash sensor for zone 5 is connected to device **A**. If the sensor detects a fault and simultaneously, device **A** detects an overcurrent signal, zone 5 is isolated by the outgoing feeder breaker.

For the other feeders, the fiber-loop arc flash sensors monitoring zone 5 are connected to the appropriate feeder relays and they operate the same way as feeder **A**.

The fiber loop arc flash sensors for zones 3, 2 and 1 are connected to device **F.** If a sensor detects a fault in zones 3, 2 or 1 and simultaneously, device **F** detects an overcurrent signal, the fault is cleared by the incoming breaker operation.

Device **G** measures the overcurrent and receives light detection signals from zones 1, 2, and 3. It trips the substation if device **F** is unable to measure the overcurrent.

Application

Connections with Sensors

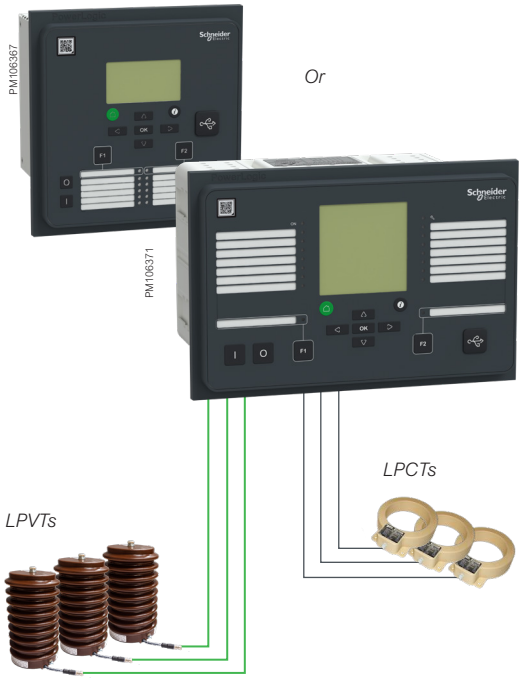

LPCT and LPVT connection to PowerLogic P3U30, P3F30 and P3M30 protection relays

Compatibility with Low Power Sensors LPCT/LPVT...

PowerLogic P3 relays can be ordered with either a conventional CT/VT measuring module or with a low-power CT/VT measuring module, compatible with low-power sensors compliant to IEC 61869-10 and IEC 61869-11 standards.

PowerLogic P3 protection relays can work with both resistive divider and capacitive divider LPVTs.

Low Power Current Transformer (LPCT) is a magnetic sensor with integrated shunt providing a voltage output (mV) which represents the primary current (A). LPCTs provide a low voltage output signal compatible with PowerLogic P3 protection relays.

Low Power Voltage Transformer (LPVT) is a voltage sensor based on resistor dividers for digital protection and measuring devices. LPVTs provide a low voltage output signal compatible with PowerLogic P3 protection relays.

The LPCT/LPVT compatibility of PowerLogic P3 allows users to move from conventional instrument transformers to better low power sensors technology which brings a variety of benefits at every stage of the project and throughout the whole life cycle of your installation.

...for more reliability...

Low power sensors are free of ferroresonance and represent high accuracy up to short circuit levels.

They can be used in protection and measurement purposes with very wide operating range. This technology ensures easier maintenance thanks to very low voltage values present on the secondary side.

LPCT TLP130 - 0,72 kV insulation

... and simplicity

Solutions bring significant simplification during project execution stage.

Simpler engineering (no CT sizing), procurement, stocking (very less variants) and installation ensures high effectiveness and improves the project delivery time.

LPVT GIS type C - 24 kV insulation

Life Is On Schneider Electric

Base Unit Description

Hardware Specification

LPVT transducer allowing to transmit LPVT signal across multiple PowerLogic P3 devices

LPCT test socket and plug Essailec® from TE Connectivity

LPVT test socket and plug Essailec® from TE Connectivity

LPCT/LPVT Test Box

Optimization of switchgear design with LPVT sharing application

Similarly to conventional schemes, low power voltage transformer (LPVT) signal can be shared across up to 10 PowerLogic P3 protection relays per one LPVT transducer. The LPVT signal can be shared throughout medium voltage cubicles ensuring significant economies in the usage of primary voltage sensing equipment. All connections are made with screened RJ45 cables and resilient to potential electromagnetic disturbances met in medium voltage compartments.

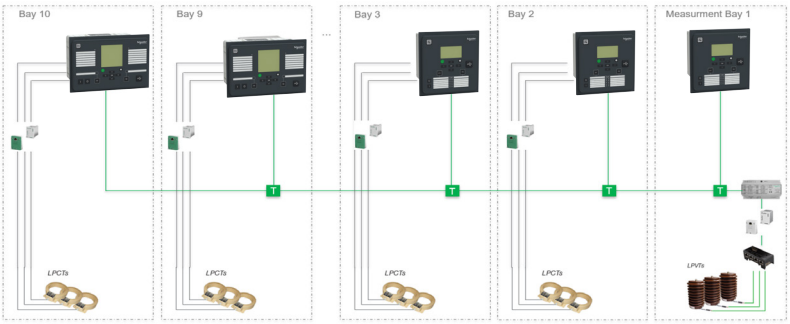

Comfortable solution for LPCT/LPVT testing

For secondary testing purposes, there is an LPCT/LPVT test box which allows to interconnect Omicron testing kit with PowerLogic P3 protection relay and test LPCT/LPVT inputs properly in the entire measurement range at the requested accuracy. This option limits the doubts related to testing of the LPCT/LPVT solution and brings more comfort to the testing practices.

LPCT and LPVT test sockets and plugs can be used to make an accessible provision for testing in the front plate of medium voltage switchgear. The test sockets and plugs are housed in the same case as for the conventional CT/VT solution and allows the Users to replicate the same testing procedures. The test sockets and plugs simplify test operation. The testing can be done without opening the medium voltage cubicle door and avoids any manipulations with wiring. This improves the commissioning and periodic testing.

PowerLogic™ P3 Standard

PowerLogic™ P3 Standard

Presentation	34
Functional View	36
Base Unit Presentation	38
Local HMI	38
Rear Panel Connections	39
Base Unit Dimensions	40
Cut-Out and Mounting	40
Base Unit Characteristics	41
Technical Characteristics	41
Environmental Characteristics	42
Communication Protocols	44
Programmable Stages	45
Circuit Breaker Control	46
Connection Diagram	47
Model Selection	50

Presentation

The PowerLogic P3 Standard protection relay has been developed to meet your standard protection needs for building, distribution utilities, and industrial applications. Thanks to its optimized and flexible design, the PowerLogic P3 Standard provides an excellent solution for various protection applications.

The user-friendly PowerLogic P3 Standard brings greater efficiency to your operations by enabling rapid ordering, configuration, and operations for an unparalleled digital experience

PowerLogic P3 Standard at a Glance

Universal

- All-in-one box with feeder, transformer, and motor protections
- All communication protocols embedded on serial and Ethernet links including IEC 61850 ed.1 and ed. 2

Robust

- Best-in class reliability based on 100+ years of experience in Sepam, MiCOM and Vamp relays
- Strong tests performed in international laboratories
- Compliant to IEC electro-mechanical standards
- Designed for demanding industrial conditions with conformal-coated printed circuit boards

Efficient and connected

- Easy to order with 10 standard configurations delivered off the shelf in less than 7 days (location dependent)
- Easy to configure with the unique eSetup Easergy Pro setting software
- Easy to test with the virtual simulation test for direct injection of current and voltage from eSetup Easergy Pro
- Easy to install with withdrawable rear connectors with CT shortening
- Easy to use and maintain with the embedded web-HMI and EcoStruxure™ Power Device app for direct access on site via your laptop, smartphone, or tablet.

PM106572

Life Is On Schneider Electric

Presentation

PowerLogic P3 is designed to cover all the standard applications with only one device: the Universal Protection.

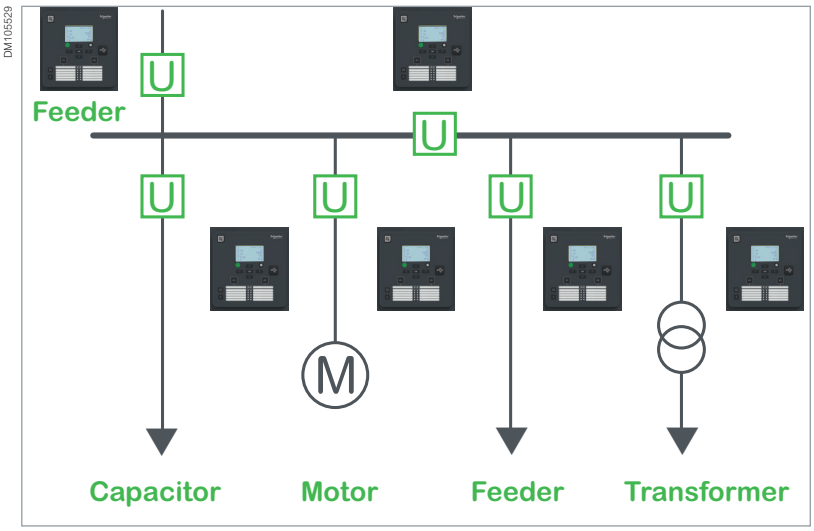

PowerLogic P3 Standard is available **in 2 models**:

Model	Communication	Main advantages
PowerLogic P3U20 • 4 CT/1VT • 10 DI/5 DO/WD • 8 DI/8 DO/WD	Open communication protocols on serial or Ethernet links, with IEC 61850	**Openness to IEC 61850**, while keeping the core functionalities of PowerLogic P3 Standard relay
PowerLogic P3U30 • 4 CT/4VT • 16 DI/8 DO/WD • 14 DI/11 DO/WD	Open communication protocols on serial or Ethernet links, with IEC 61850	**Wide scope of possibilities,** with the directional protection, synchro-check, fault location, and increased number of input and outputs

A common set of functions extends the possibilities of protection and control:

- Single-line diagrams (mimic) in the display
- Programmable protection stages
- Programmable logics
- 2 programmable function keys
- Synchro-check function
- Direct-access USB port
- Up to 6 objects controlled

Life Is On Schneider Electric

Functional View

PowerLogic™ P3U20

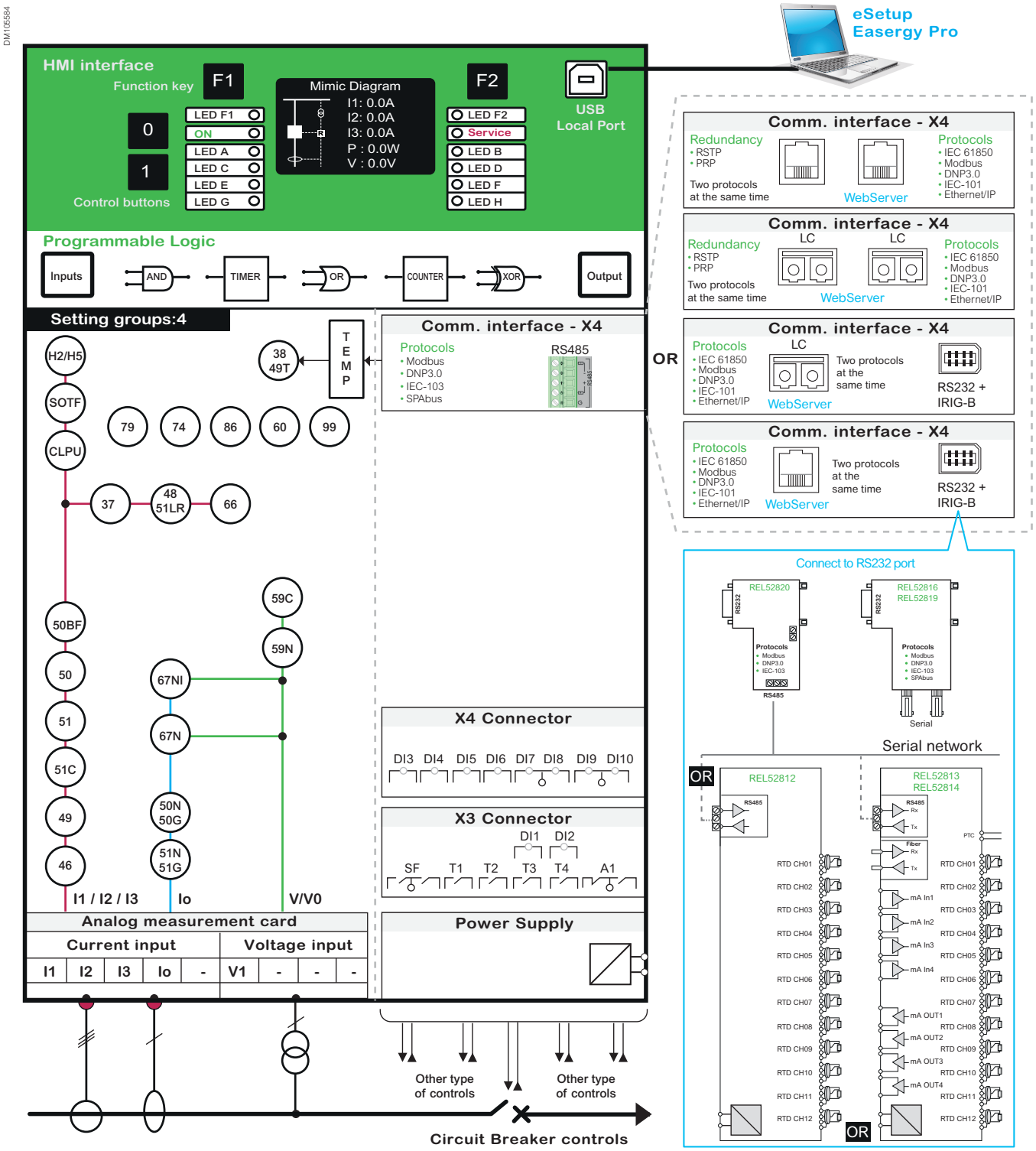

Life Is On Schneider Electric

Functional View

PowerLogic™ P3U30

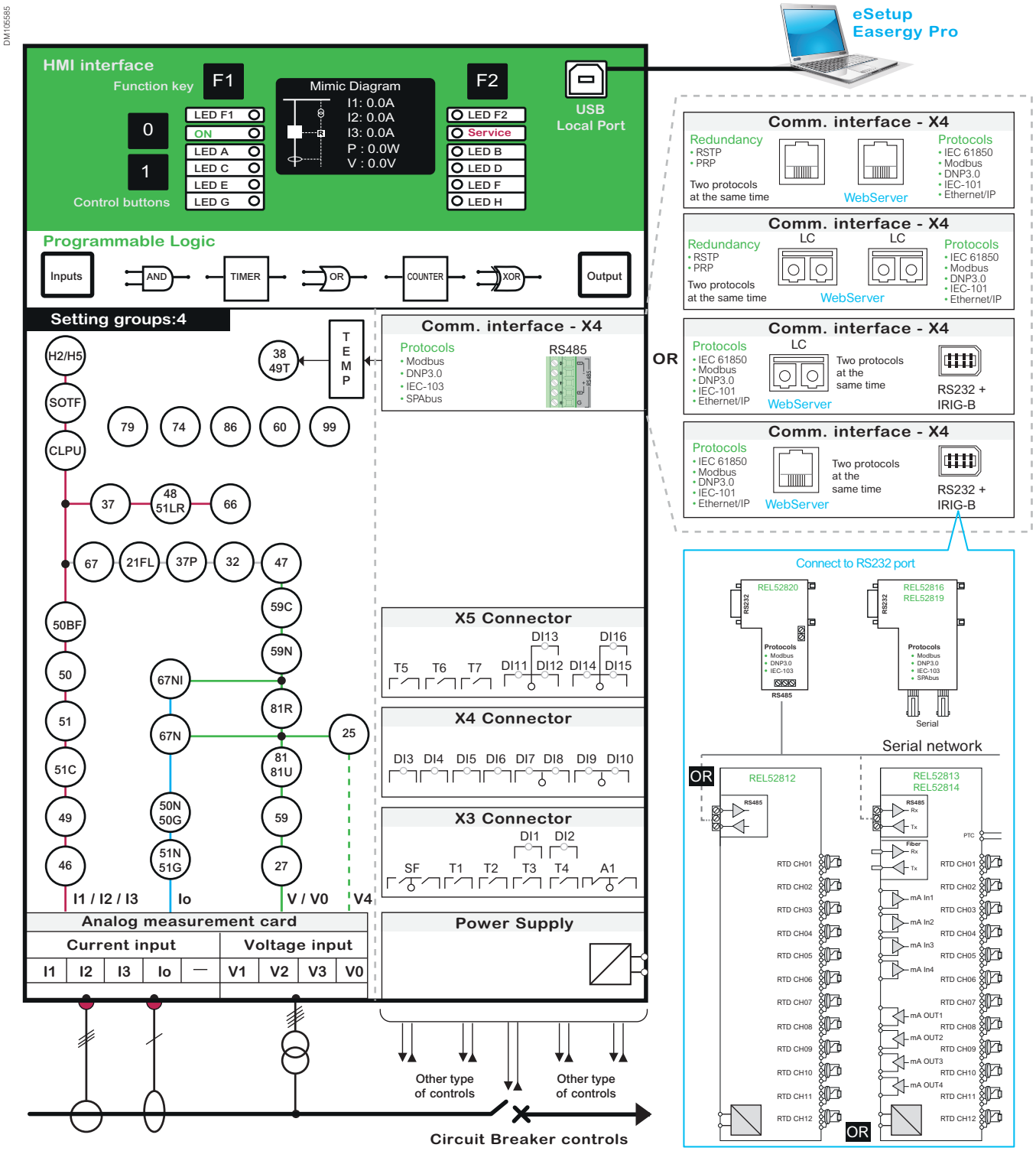

Base Unit Presentation

Local HMI

DM105586

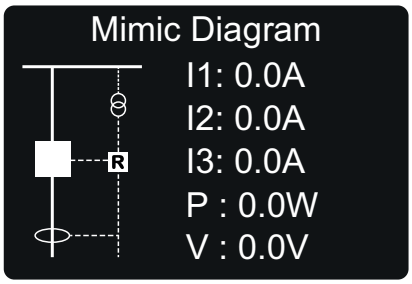

Single-line diagram of the power system

Comprehensive Data for Fast and Easier Operation

All the data required for a local equipment operation may be displayed on demand:

- Display the single-line diagram and freely assignable analog values
- Display of all measurements
- Display of operation and alarm messages
- Display and setting of all parameters
- Entry of password to protect parameter and protection settings

Ergonomic Data Presentation

- Keypad keys identified by pictograms for intuitive navigation
- Graphical 128x64 LCD screen to display any character or symbol
- Excellent display quality under all lighting conditions
- Control buttons (0/1) to operate the circuit breaker and/or other controlled object
- 8 freely programmable LEDs to identify easily the message showed
- Labels are printed on a transparent film allowing customization of the relay
- Programmable function key (F1/F2)

Front Panel: Control and Push-Buttons	
i	INFO push-button for viewing additional information, entering the password view, and adjusting the LCD contrast
F1	Programmable function push-button
F2	Programmable function push-button
OK	ENTER push-button for activating or confirming a function
∧	UP navigation push-button for moving up in the menu or increasing a numerical value
∨	DOWN navigation push-button for moving down in the menu or decreasing a numerical value
<	LEFT navigation push-button for moving backwards in a parallel menu or selecting a digit in a numerical value
>	RIGHT navigation push-button for moving forwards in a parallel menu or selecting a digit in a numerical value
O	Circuit breaker OFF push-button
I	Circuit breaker ON push-button
⌂	HOME/CANCEL push-button for returning to the previous menu. To return to the first menu item in the main menu, press the button for at least three seconds

PM106367

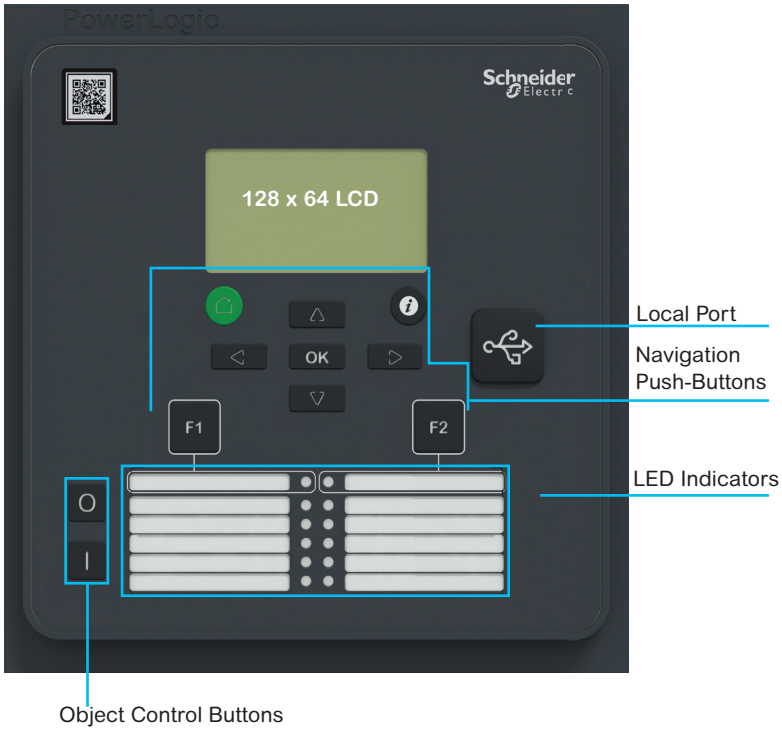

Working Language

All the texts and messages displayed on the PowerLogic P3U are available in two languages at the same time. Consult us for availability.

Life Is On Schneider Electric

Base Unit Presentation

Rear Panel Connections

Rear Panels Views

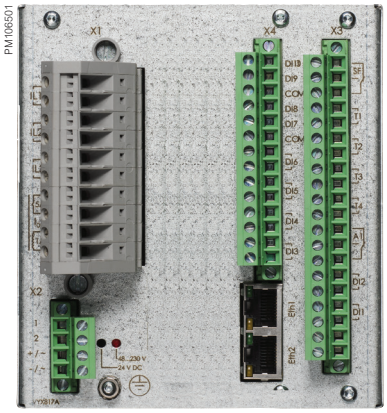

PowerLogic™ P3U20

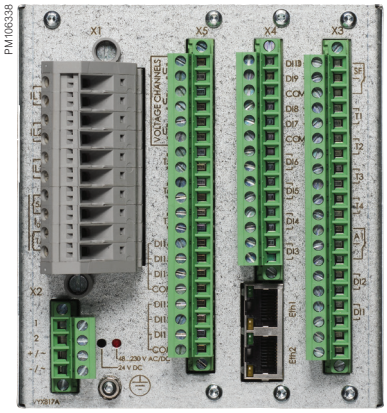

PowerLogic™P3U30

Withdrawable Connectors

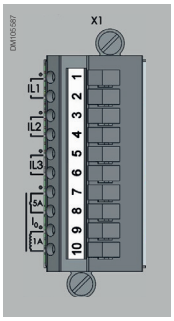

Optional terminal X1:
Pluggable screw
clamp connector

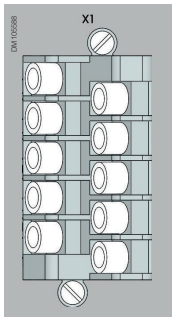

Optional terminal X1:
Pluggable ring-lug connector

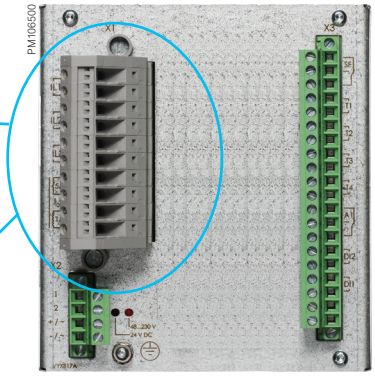

Base Unit Dimensions

Weight (Maximum)	
PowerLogic P3U20/P3U30	2.5 Kg (5.519 lb)

Degree of Protection (IEC 60529)
IP54 Front Panel/IP20 Rear Side

Cut-Out and Mounting

Cut-out accuracy must be complied with to ensure good withstand.

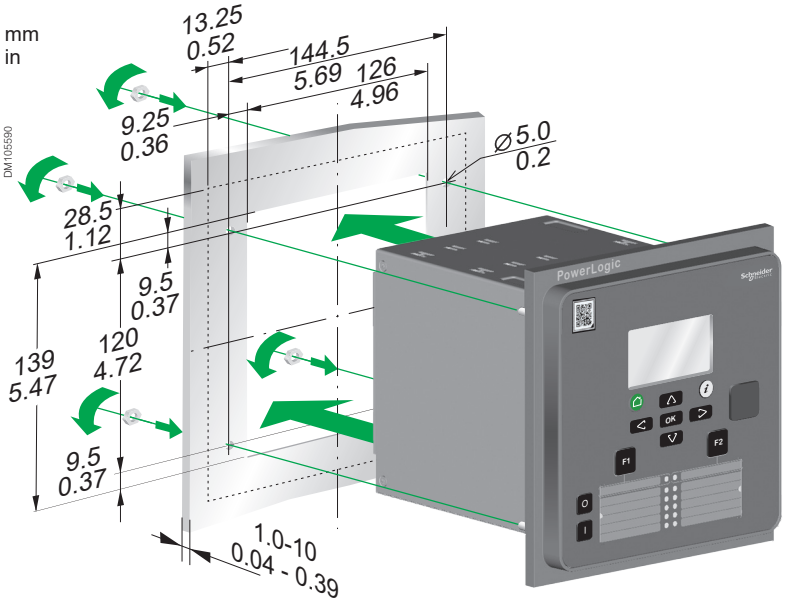

Panel Mounting

	A	B
With screw connector	214 mm/8.43 in	192 mm/7.6 in
With ring-lug connector	226 mm/8.90 in	204 mm/8.0 in

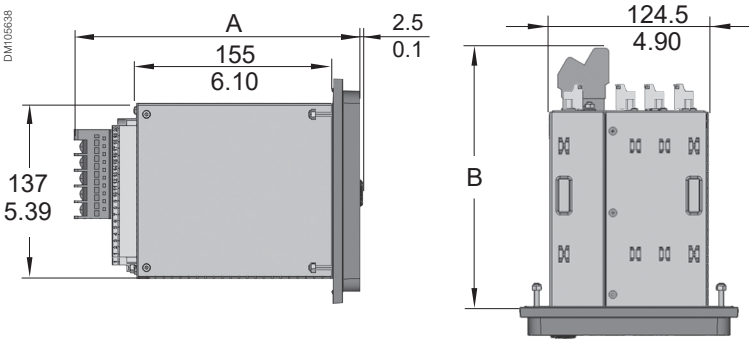

Projection Mounting with the Raising Frame REL52834

	A	B
With screw connector	214 mm/8.43 in	147 mm/5.8 in
With ring-lug connector	226 mm/8.90 in	159 mm/6.2 in

Raising frame
Ref: VYX860-
REL52834

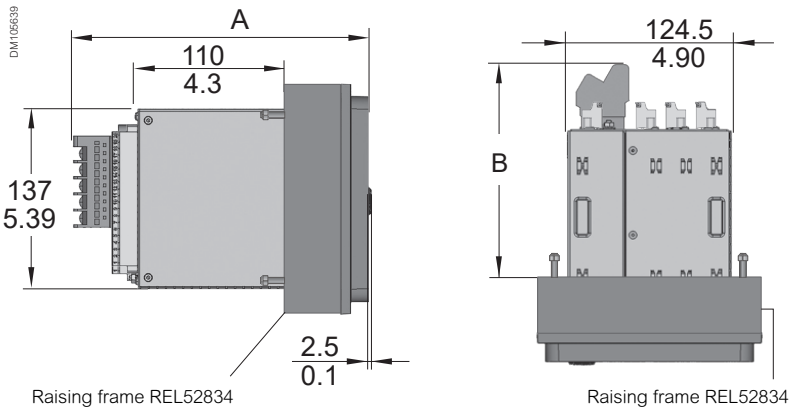

Life Is On Schneider Electric

Base Unit Characteristics

Technical Characteristics

Analog inputs

	Setting range	Measuring range	Input Impedance	Consumption	Rated thermal withstand	1-second overload	10-second overload
Phase Current Input 5 A CT Configurable for CT secondaries 1 to 10 A	I_N = 5 A or 1 A Overcurrent: 0.05 - 40 x In	0.05...250 A	0.003 Ohm	0.075 VA	20 A (Continuously)	500 A	100 A
Residual Current Input (I0) 5 A CT Configurable for CT secondaries 0.1 to 10 A	I_N = 5 A or 1 A Residual current: 0.005 - 20 x In	0.015...50 A	0.003 Ohm	0.075 VA	20 A (Continuously)	500 A	100 A
Residual Current Input (I0) 1 A CT Configurable for CT secondaries 0.1 to 10.0 A	Io_N = 1 A Residual current: 0.005 - 20 x In	0.003...10 A	0.02 Ohm	0.02 VA	4 A (Continuously)	100 A	20 A
Residual Current Input (I0) 0.2 A Configurable for CT secondaries 0.1 to 10.0 A	Io_N = 0.2 A Residual current: 0.005 - 20 x In	0.0006...2 A	0.02 Ohm	0.02 VA	0.8 A (Continuously)	20 A	4 A
Residual Current Input (I0) CSH 2 A/20 A (using 470/1 sensor)	Io_N = 2 or 20 A Residual current: 0.050–8 IoN	0.02 – 42 x In	0.02 Ohm	n.a.	1.8 A rms (Continuously)	40 A rms	n.a.
Voltage Input Configurable for VT secondaries 50 to 120 V	U_N = 100 or 110 V Overvoltage: 50 - 160% x Un	0.5...190 V (100 V/110 V)	n.a.	< 0.015 VA	250 V (Continuously)	n.a.	600 V

Analog temperature input and Analog output

Type of temperature sensor		Pt100	Ni100	Ni120	Cu10
Maximum distance between sensor and module		up to 2,000 m (1)	up to 2,000 m (1)	up to 2,000 m (1)	up to 2,000 m (1)
Analog Output	Minimum current	0 mA			
	Maximum current	20 mA			
Operating temperature:		0 °C (32 °F)...+55 °C (131 °F)			
Power supply	REL52811/REL52812	24...230 Vac/dc, 50/60 Hz			
	REL52813	24 Vdc			
	REL52814	48...230 Vac/dc, 50/60 Hz			

Digital Input

Nominal operation voltage	DI1 to DI16	24...230 Vac/dc	110...230 Vac/dc	220...230 Vac/dc
Typical switching threshold		12 Vdc	75 Vdc	155 Vdc
Input limit voltage	At state 1	≥19.2 Vdc	≥88 Vdc	≥176 Vdc
	At state 0	<10.0 Vdc	<60 Vdc	<140 Vdc
Frequency		45...65 Hz	45...65 Hz	45...65 Hz
Typical consumption		<4 mA (typical approx. 3 mA)		
Voltage withstand		255 Vac/dc		

Digital Output

Type of contact			Control and Trip contact, Tx	Signal contact, A1	Signal Contact, SF
Rated Voltage			250 Vac/dc	250 Vac/dc	250 Vac/dc
Continuous current			5 A	5 A	5 A
Breaking capacity	AC		2.000 VA	2.000 VA	2.000 VA
	DC (L/R=40ms)	at 48 Vdc	1.15 A	1 A	1 A
		at 110 Vdc	0.5 A	0.3 A	0.3 A
		at 220 Vdc	0.25 A	0.15 A	0.15 A
Making capacity		≤0.5 s	30 A	30 A	-
		≤3.0 s	15 A	15 A	-
Minimum making capacity			100 mA @ 24 Vac/dc	100 mA @ 24 Vac/dc	100 mA @ 24 Vac/dc
Typical operation time			<8 ms	-	-
Contact material			AgNi 90/10	AgNi 0.15 gold plated	AgNi 0.15

Power supply

Nominal Voltage		48...230 Vac/dc	24...48 Vdc (2)
Range		-20%/+10% (38.4...253 Vac/dc)	±20% (19.2...57.6 Vdc) (2)
Inrush current (DC)		25 A with time constant of 1000 µs	
		25 A with time constant of 750 µs	
		15 A with time constant of 500 µs	
Power consumption	Normal conditions	<15 W (<30 VA)	
	Output relays activated	<25 W (<50 VA)	
Acceptable momentary outages		<50 ms (110 Vdc)	

(1) 78,750 in
(2) Check the available power supply range from the device's serial number label

Base Unit Characteristics

Environmental Characteristics

Electromagnetic Compatibility

	Standard and test class/level	Test value
Emission tests	**IEC/EN 60255-26 (ed3)**	
Conducted	EN 55022, Class A/CISPR 22	0.15...30 MHz
Emitted (P3Ux)	EN 55011, Class A/CISPR 11	30...1000 MHz
Emitted (P3x3x)	Class A/CISPR 11/IACS E10	150 kHz...6 GHz
Immunity	**IEC/EN 60255-26 (ed3)**	
Slow damped oscillatory wave 1 MHz	IEC/EN 61000-4-18	±2.5kVp CM ±2.5kVp DM
Fast damped oscillatory wave 3 MHz, 10 MHz and 30 MHz	IEC/EN 61000-4-18	±2.5kVp CM
Static discharge (ESD)	IEC/EN 61000-4-2 Level 4	±8 kV contact ±15 kV air
Emitted HF field (P3Ux)	IEC/EN 61000-4-3 Level 3 IEEE C37.90.2	80...2700 MHz, 10 V/m 80...1000 MHz, 20 V/m
Emitted HF field (P3x3x)	IEC/EN 61000-4-3 Level 3 IEEE C37.90.2/IACS E10	80 MHz...6 GHz, 10 V/m 80...1000 MHz, 20 V/m
Fast transients (EFT)	IEC/EN 61000-4-4 Level 4	±4 kV, 5/50 ns, 5 kHz
Surge	IEC/EN 61000-4-5 Level 3	±4 kV, 1.2/50 µs, CM ±2 kV, 1.2/50 µs, DM
Conducted HF field	IEC/EN 61000-4-6 Level 3	0.15...80 MHz, 10 Vrms
Power-frequency magnetic field	IEC/EN 61000-4-8	300 A/m (continuous) 1000 A/m 1–3 s
Pulse magnetic field	IEC/EN 61000-4-9 Level 5	1000 A/m, 1.2/50 µs
ac and dc voltage dips	IEC/EN 61000-4-29, IEC/EN 61000-4-11	0% of rated voltage • ac: ≥ 0.5 cycle • dc: ≥ 10 ms 40% of rated voltage • ac: 10 cycles • dc: 200 ms 70% of rated voltage • ac: 25 cycles • dc: 500 ms
ac and dc voltage interruptions	IEC/EN 61000-4-29, IEC/EN 61000-4-11	100% interruption • ac: 250 cycles • dc: 5 s
Voltage alternative component	IEC/EN 61000-4-17	15% of operating voltage (dc)/10 min

Mechanical Robustness

	Standard and test class/level	Test value
In operation		
Vibrations	IEC 60255-21-1, Class II/IEC 60068-2-6, Fc	1 Gn, 10...150 Hz
Shocks	IEC 60255-21-2, Class II/IEC 60068-2-27, Ea	10 Gn/11 ms
Seismic	IEC 60255-21-3 Method A, Class II	2G horizontal/1G vertical, 1...35 Hz
De-energized		
Vibrations	IEC 60255-21-1, Class II/IEC 60068-2-6, Fc	2 Gn, 10...150 Hz
Shocks	IEC 60255-21-2, Class II/IEC 60068-2-27, Ea	30 Gn/11 ms
Bump	IEC 60255-21-2, Class II/IEC 60068-2-27, Ea	20 Gn/16 ms

Life Is On Schneider Electric

Base Unit Characteristics

Environmental Characteristics

Environment Tests

	Standard and test class/level	Test value
In operation		
Dry heat	EN/IEC 60068-2-2, Bd	70 °C (158 °F)
Cold	EN/IEC 60068-2-1, Ad	-40 °C (-40 °F)
Damp heat, cyclic	EN/IEC 60068-2-30, Db	From 25 °C (77 °F)...55 °C (131 °F) From 93% RH to 98% RH Testing duration: 6 days
Damp heat, static	EN/IEC 60068-2-78, Cab	40 °C (104 °F) 93% RH Testing duration: 10 days
Change of temperature	IEC/EN 60068-2-14, Nb	Lower temp -40 °C (-40 °F) Upper temp 70 °C (158 °F) 5 cycles
Flowing mixed gas corrosion test, method 1	IEC 60068-2-60, Ke	25 °C (77 °F), 75% RH, 21 days 100 ppb H2S, 500 ppb SO_2
Flowing mixed gas corrosion test, method 4	IEC 60068-2-60, Ke	25 °C (77 °F), 75% RH, 21 days 10 ppb H2S, 200 ppb NO_2, 10 ppb CL_2, 200 ppb SO_2
In storage		
Dry heat	EN/IEC 60068-2-2, Bb	70 °C (158 °F)
Cold	EN/IEC 60068-2-1, Ab	-40 °C (-40 °F)

Environmental Conditions

Ambient temperature, in-service	-40...60 °C (-40...140 °F)	
Ambient temperature, storage	-40...70 °C (-40...158 °F)	
Relative air humidity	< 95%, no condensation allowed	
Maximum operating altitude	2000 m (6561.68 ft)	

Safety

	Standard and test class/level	Test value
Electrical safety tests		
Impulse voltage withstand	IEC/EN 60255-27	5 kV, 1.2/50 µs, 0.5 J 1 kV, 1.2/50 µs, 0.5 J Communication
Dielectric test	IEC/EN 60255-27	2 kV, 50 Hz 0.5 kV, 50 Hz Communication
Insulation resistance	IEC/EN 60255-27	
Protective bonding resistance	IEC/EN 60255-27	
Clearance and creepage distance	Design criteria for distances as per IEC 60255-27 Annex C (pollution degree 2, overvoltage category 3)	
Power supply burden	IEC 60255-1	

Communication Protocols

PowerLogic™ P3 Standard can be connected to networks, thus providing access to the following type of data:

- Events
- Status information
- Measurements
- Control commands
- Clock synchronizing
- Settings (SPA-bus and embedded SPA-bus only)

PM106362

EcoStruxure™ Power Device app.

Main Protocols

PowerLogic P3 Standard can be connected directly to serial and/or Ethernet protocols with two different protocols at the same time, selected by eSetup Easergy Pro software.

Communication protocols:

Serial protocols - RS232/RS485/serial Fiber Optic (*) port
Modbus RTU
DNP3.0
IEC 60870-5-101
IEC 60870-5-103
ProfibusDP (*)
SPA-Bus (*)
Ethernet protocols - RJ45/LC port
IEC61850 ed1 & ed2
Modbus TCP
DNP3.0
IEC60870-5-101 IEC60870-5-104
Ethernet IP

Communication ports:

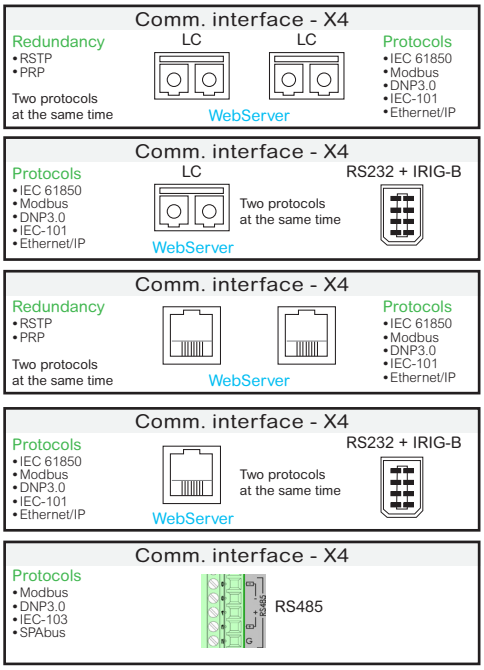

Need external accessories to connect.

PM106576

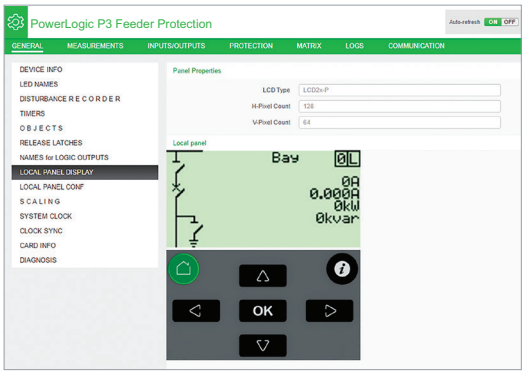

PowerLogic web-HMI

Redundancy Protocols (RSTP or PRP)

When the devices are connecting in Ethernet link and demand for higher availability, PowerLogic P3 Standard can use Rapid Spanning Tree Protocol (RSTP) or Parallel Redundancy Protocol (PRP) to recover from a network failure.

PowerLogic P3 Web-HMI

A webserver is available in PowerLogic P3 Standard to get information from the device to monitor all data, send commands, and change protection settings.

Life Is On Schneider Electric

Programmable Stages

Programmable Protection Function

Personalize your Protection Function

PowerLogic P3 Standard allows you to create or personalize the protection function when you need to achieve specific levels of protection.

There are now eight stages available to use with various applications. Each stage can monitor any analog (measured or calculated) signal and issue start and trip signals. Programmable stages extend the protection functionality of the manager series to a new level. The Programmable stage has the possibility of comparing two freely selectable signals between each other. Using this feature you can create a comparison function using the relay's own measured or calculated signals. One or both of the signals can be connected to the comparison function over GOOSE.

For example, if four stages of frequency are not enough, it is possible to reach a maximum of 12 using programmable stages. Other examples include using the stages to issue an alarm when there are too many harmonics (THD) or indicating reverse power condition by GOOSE.

EM100170

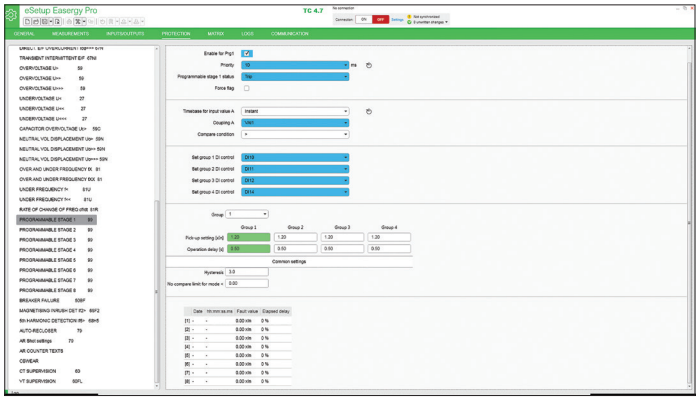

Life Is On Schneider Electric

Circuit Breaker Control

With PowerLogic™ P3 Standard, you get intuitive functionality to protect your electrical network system.

Main CB functions are:

- Trip circuit supervision (ANSI 74)
- CT/VT supervision (ANSI 60/60FL)
- Latching (ANSI 86)
- CB close/open order
- Number of operations
- Cumulative breaking current
- Personalized functions

Maximize Circuit Breaker Control

PowerLogic P3 Standard is a simple protection relay with a single-line diagram with control buttons (open and close), two personalized function keys, and eight configurable single-color LEDs in P3 Standard and fourteen tricolor LEDs in P3 advanced.

You can manage the control without external or additional component.

Example of implementation

The schematic is structured for typical use in MV switchgears, 100% adapted for your use case. You are free to change the internal logic to adapt the PowerLogic P3 Standard to follow your needs.

If a problem occurs, clear and concise information allows users to make the right decisions at the right time.

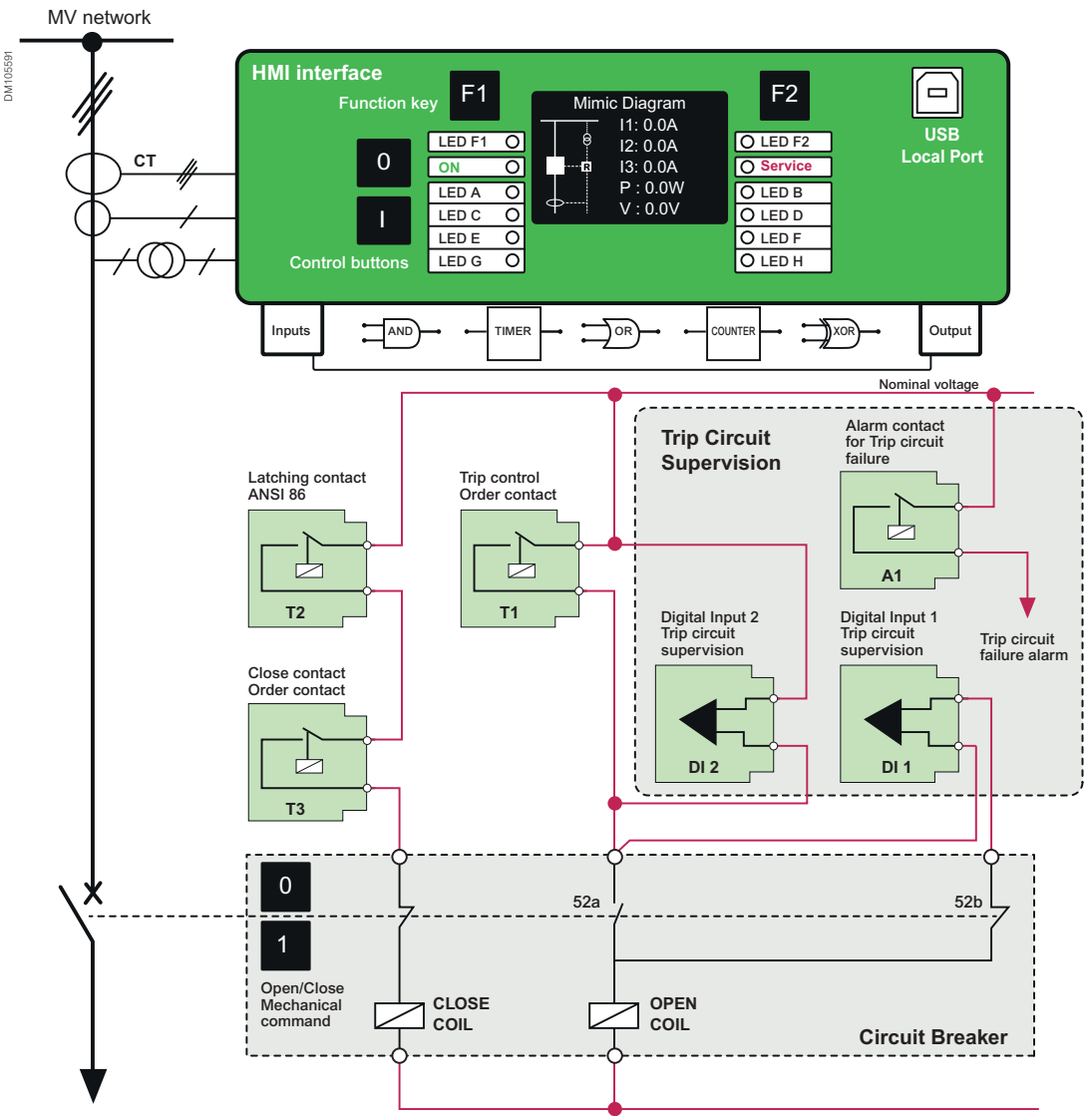

This electrical schematic can facilitate the IEC 61850 implementation because all the logics are determined by the protection unit that will make the decisions and if necessary can send GOOSE messages to other units.

Life Is On Schneider Electric

Connection Diagrams

PowerLogic™ P3U30 Example

Application with 3 Phase CTs, 1 Earth CT, 1 VT and CB Control

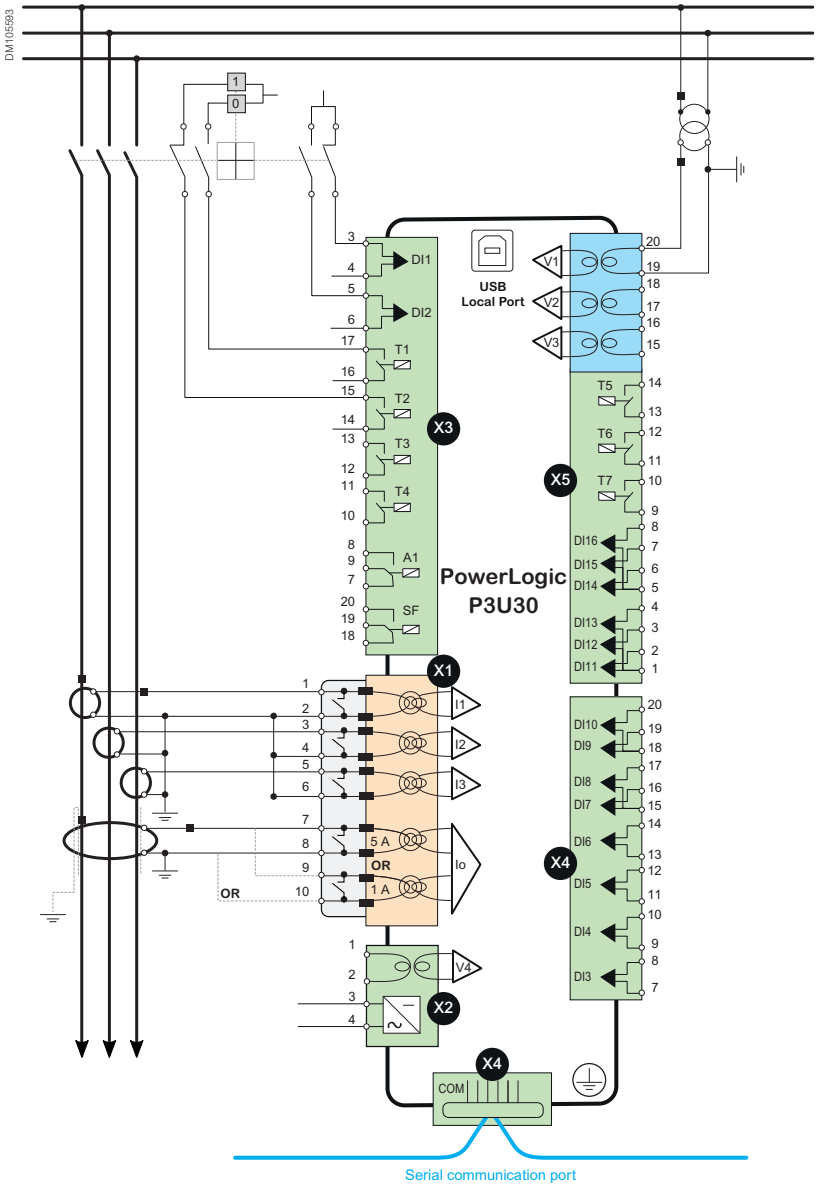

Note: Dangerous environment, make sure to read all information, including warning instructions (left).

Life Is On Schneider Electric

Connection Diagrams

PowerLogic™ P3U30 Example

Application with 3 Phase CTs, 1 Earth CT, 3 VTs, Synchro-Check and CB Control

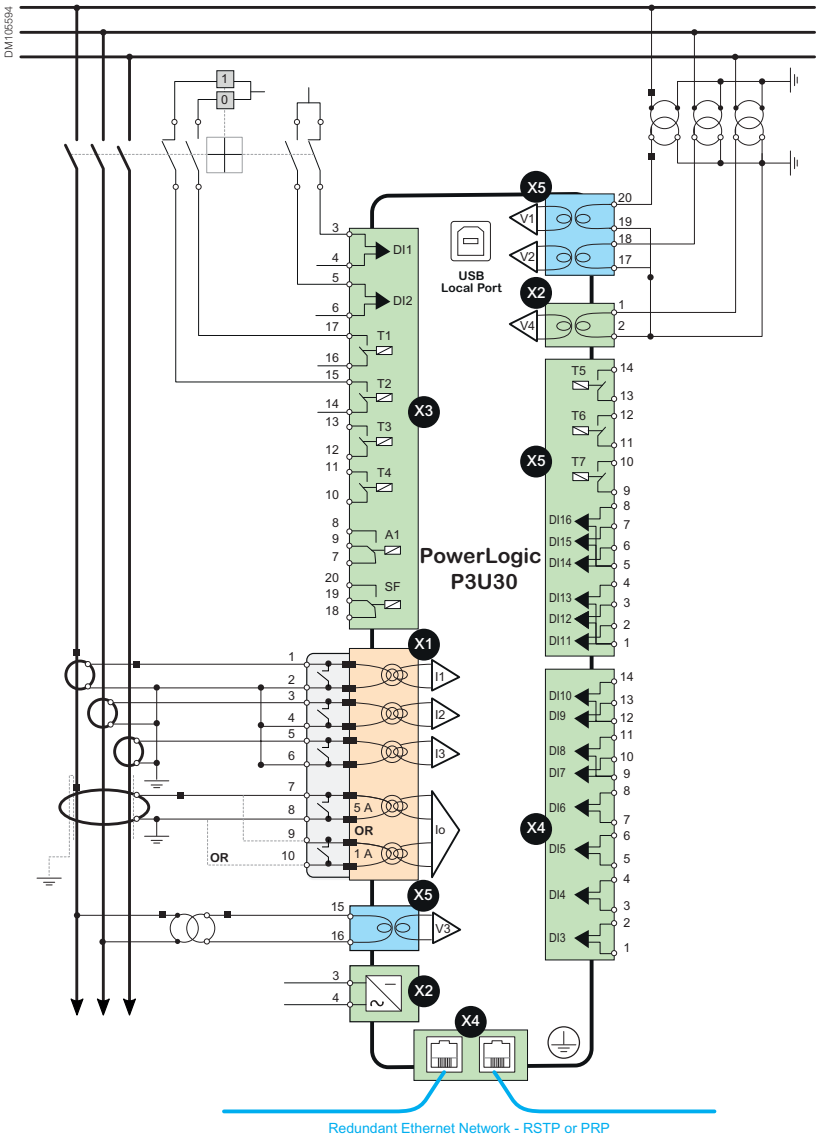

Note: Dangerous environment, make sure to read all information, including warning instructions (left).

Life Is On Schneider Electric

Connection Diagrams

PowerLogic™ P3U30 Example

Application with 3 Phase CTs, 1 Earth CT, 4 VTs and CB Control

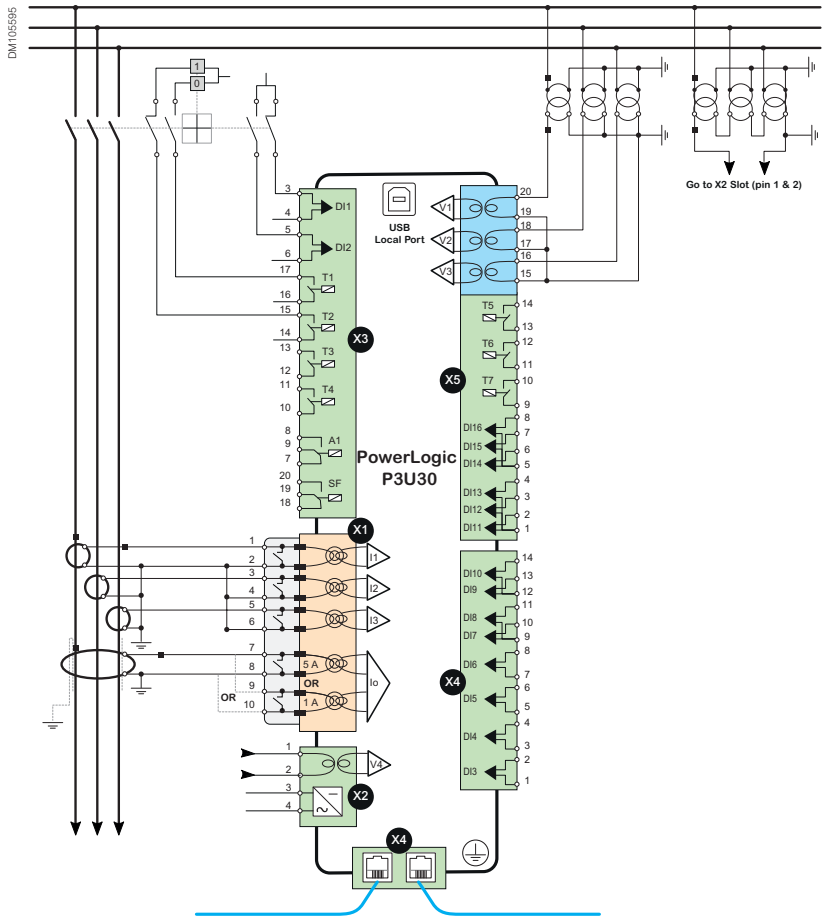

Note: Dangerous environment, make sure to read all information, including warning instructions (left).

Life Is On Schneider Electric

Model Selection

Selecting Product

Please, consult the “Ordering” section to choose specific characteristics in the relays for your system:

PM106367

P3U20 Standard Application	Page 117

PM106367

P3U30 Standard Application	Page 118

Or use our web configuration tool:

Go to web configurator

Life Is On Schneider Electric

Notes

Life Is On | Schneider Electric

PowerLogic™ P3 Advanced

PowerLogic™ P3 Advanced

Presentation	54
Functional View	56
Base Unit Presentation	63
Integrated Arc Flash Protection	63
Local HMI	64
Rear Panel	65
Remote HMI	67
Base Unit Dimensions	68
Dimensions	68
Cut-Out and Mounting	69
Base Unit Characteristics	70
Technical Characteristics	70
Environmental Characteristics	71
Communication	73
Communication Protocols	73
Programmable Stages	74
Circuit Breaker Control	75
Power Quality Measurements	76
Connection Diagrams	77
Model Selection	80

Presentation

The PowerLogic P3 advanced is a protection relay developed to satisfy the protection needs for buildings, distribution utilities, and industrial applications. Thanks to a wide scope of functionality and Ethernet communication, PowerLogic P3 advanced provides a cost-effective solution for the upper end of protection requirements in these applications.

Protect your staff and equipment and ensure safer operations with PowerLogic ™ P3 Advanced's built-in arc flash detection and protection functions.

You will experience greater operational efficiency with rapid ordering, configuration, and operations for an unparalleled digital experience provided with PowerLogic ™ P3.

PowerLogic™ P3 Advanced at a glance

Extended capabilities

- Extended protection functions, including differential of line, transformer, motor, and generator
- Arc flash detection
- All communication protocols embedded on serial and Ethernet links, including IEC 61850 ed.1 and ed. 2
- Increased number of inputs and outputs

Robust

- Best-in class reliability based on 100+ years of experience in Sepam, MiCOM and Vamp relays
- Strong tests performed in international laboratories
- Compliant with IEC electro-mechanical standards

Efficient and connected

- Easy to configure with the unique eSetup Easergy Pro setting software
- Easy to test with the virtual simulation test for direct injection of current and voltage from eSetup Easergy Pro
- Easy to use and maintain with the embedded web-HMI and EcoStruxure™ Power Device app for direct access on site via your laptop, smartphone, or tablet

PM106370

Presentation

PowerLogic P3 is designed to cover a large scope of applications

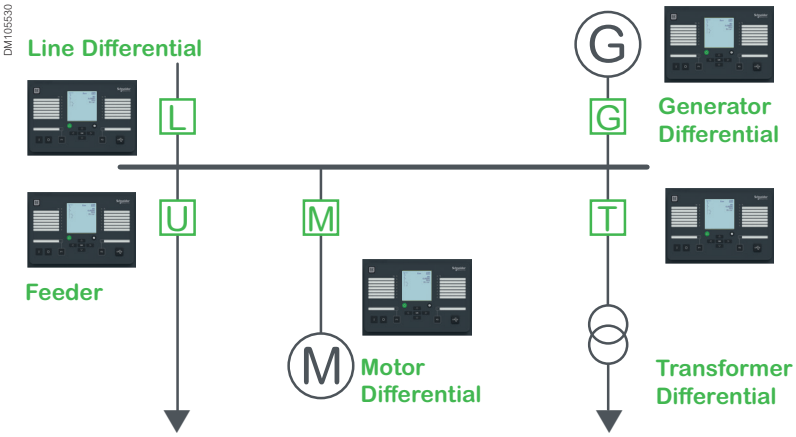

PowerLogic™ P3 Advanced is designed in **7 models, per application**:

Model		Function	
PowerLogic™ P3F	**30**	**Feeder**	Protection
PowerLogic™ P3L	**30**	**Line**	Differential
PowerLogic™ P3M	**30**	**Motor**	Protection
	32		Differential
PowerLogic™ P3G	**30**	**Generator**	Protection
	32		Differential
PowerLogic™ P3T	**32**	**Transformer**	Differential

A common set of functions extends the possibilities of protection and control:

- Single-line diagrams (mimic) in the display
- Programmable protection stages
- Programmable logics
- 2 programmable function keys
- Synchro-check function
- Direct-access USB port
- Up to 6 objects controlled
- Arc flash protection

Life Is On Schneider Electric

Functional View

PowerLogic™ P3F30

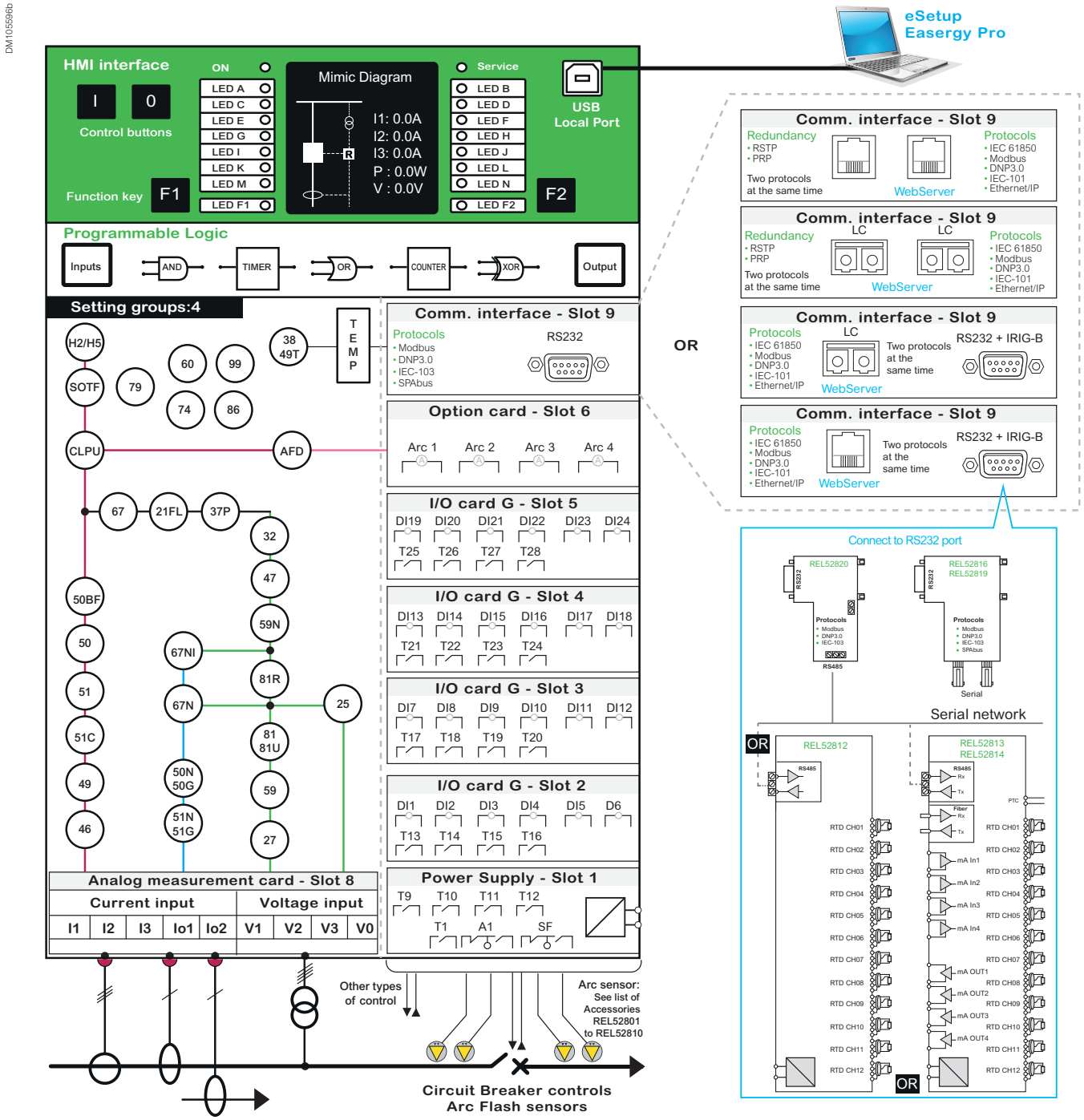

Life Is On Schneider Electric

Functional View

PowerLogic™ P3M30

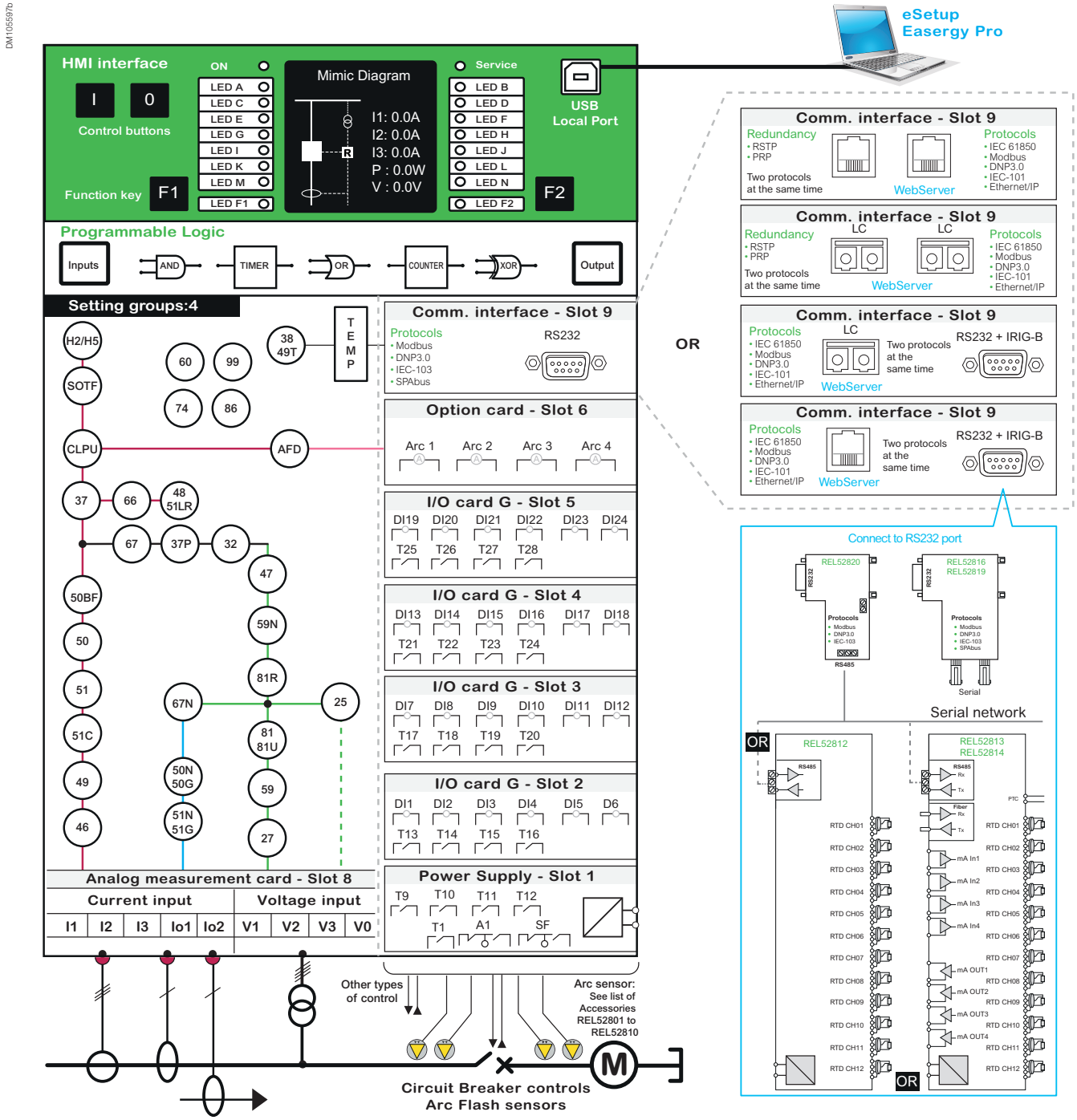

Functional View

PowerLogic™ P3M32

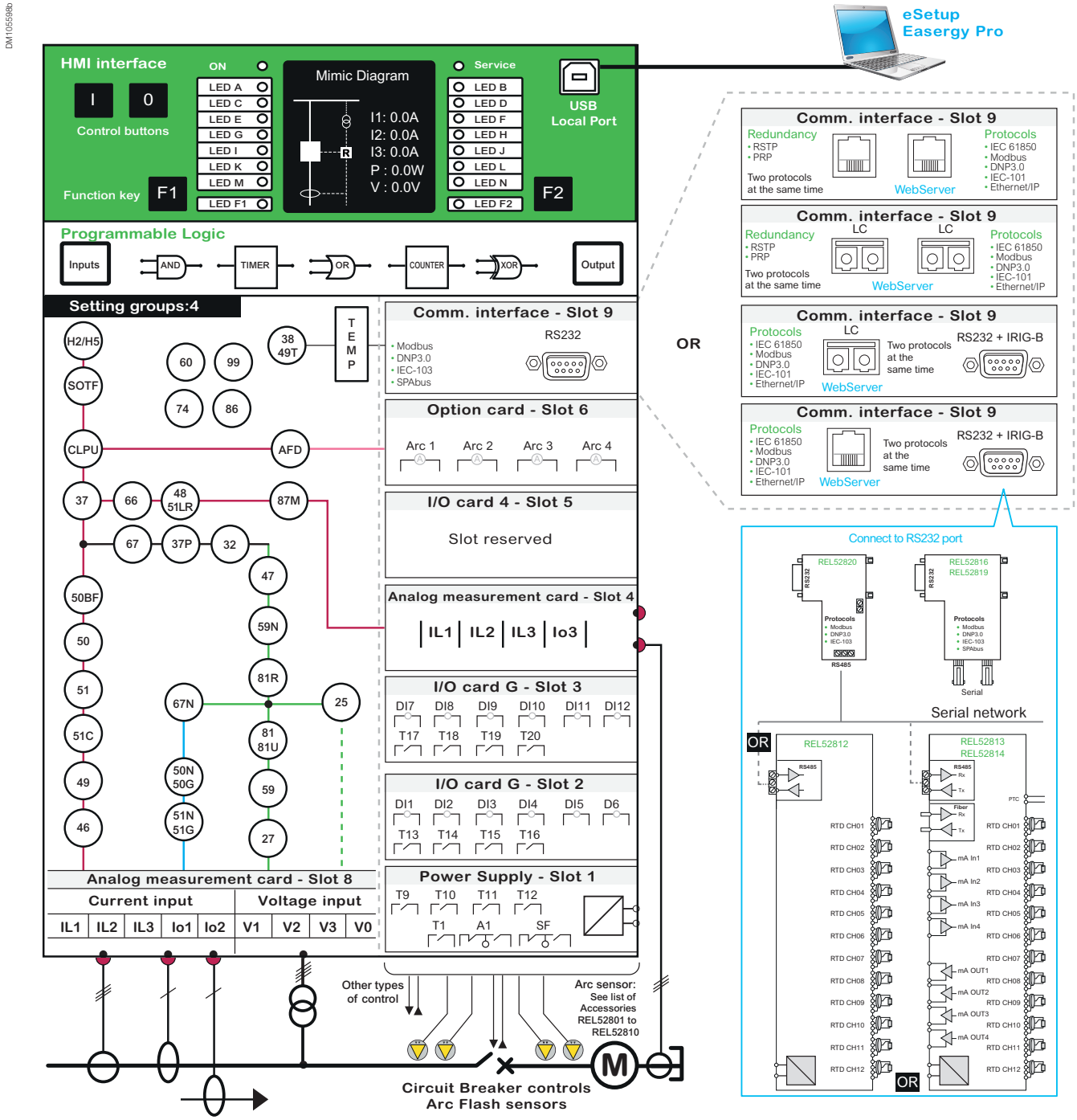

Life Is On Schneider Electric

Functional View

PowerLogic™ P3T32

DM105599b

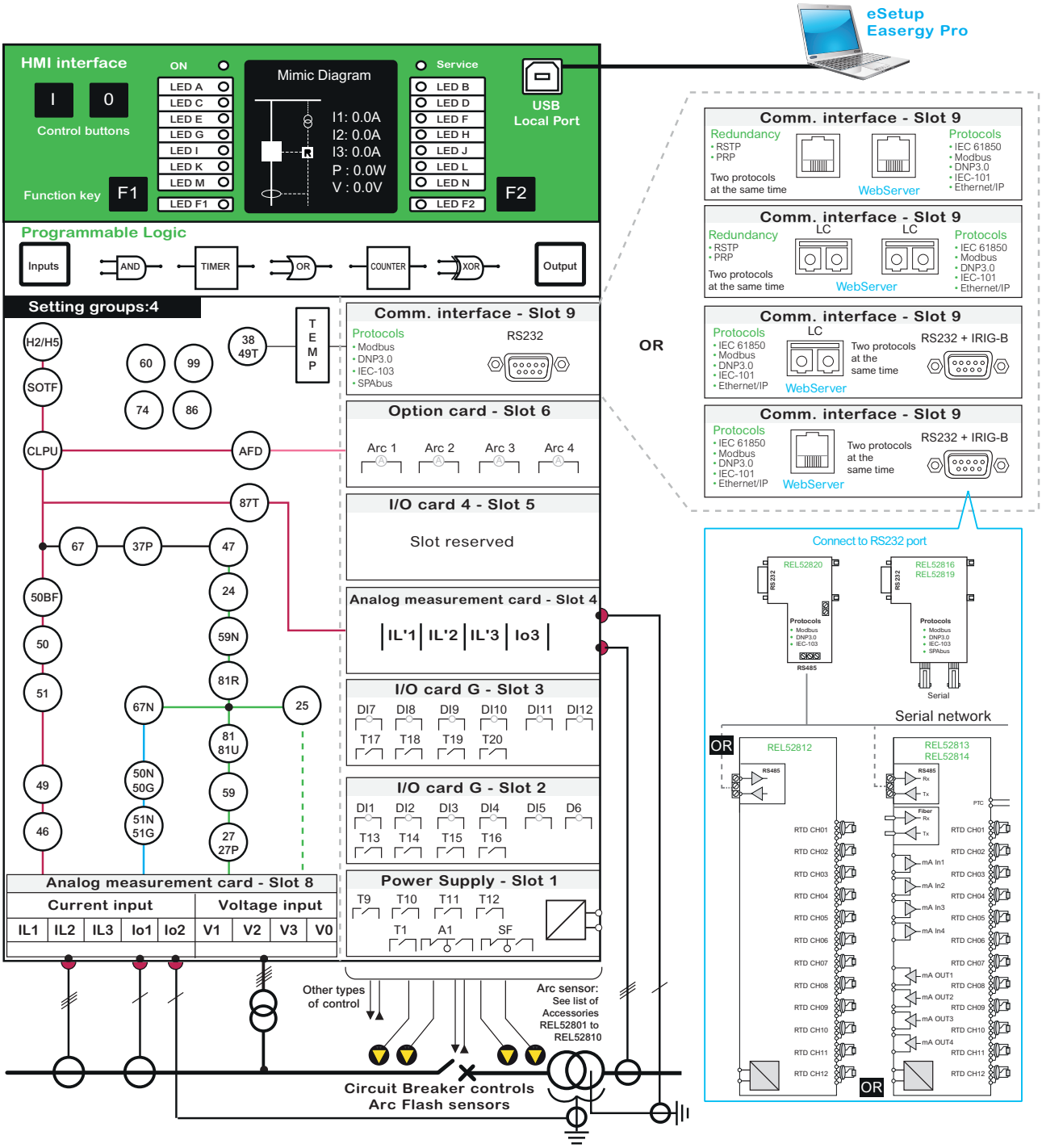

Functional View

PowerLogic™ P3L30

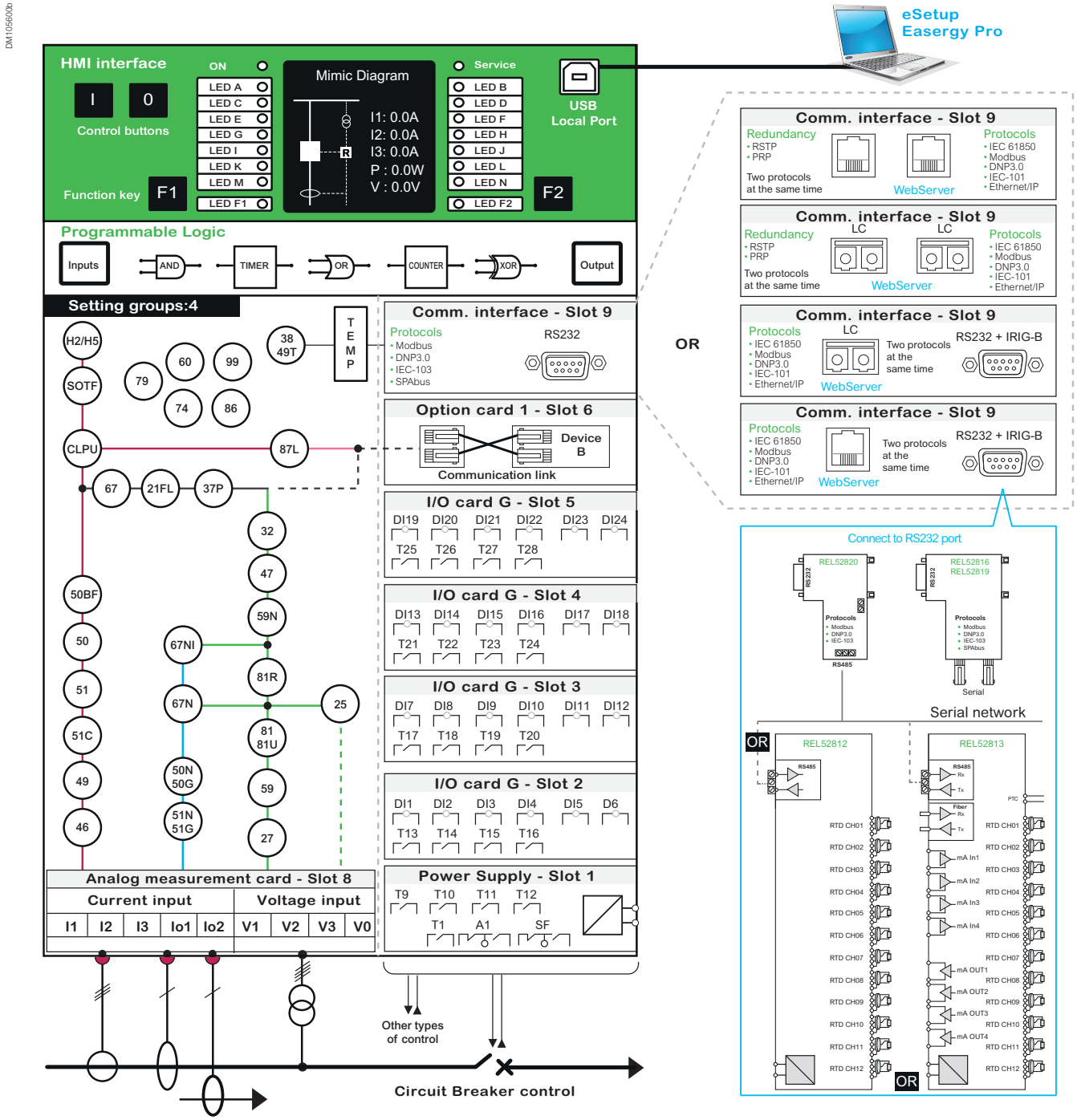

Life Is On Schneider Electric

Functional View

PowerLogic™ P3G30

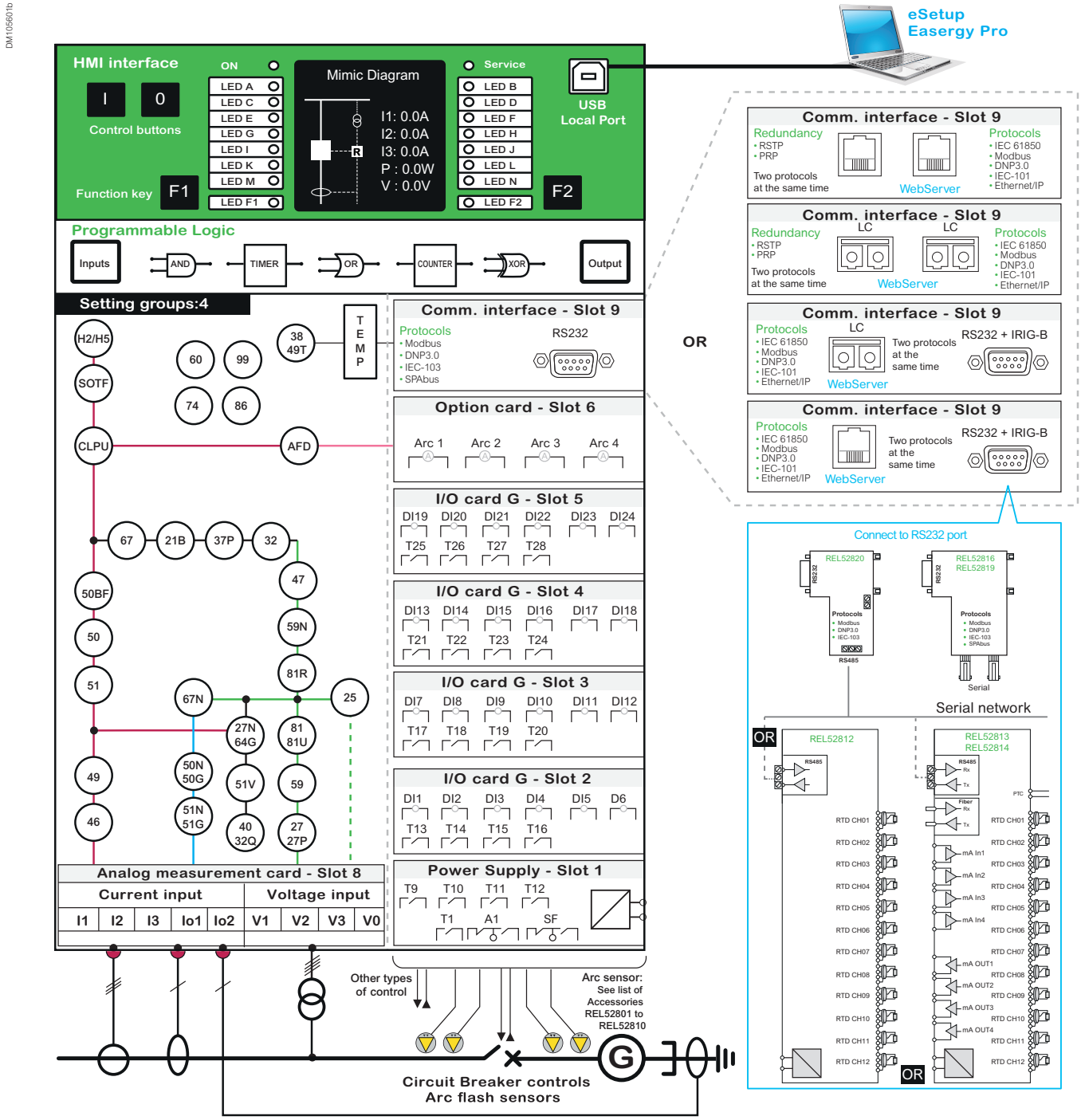

Functional View

PowerLogic™ P3G32

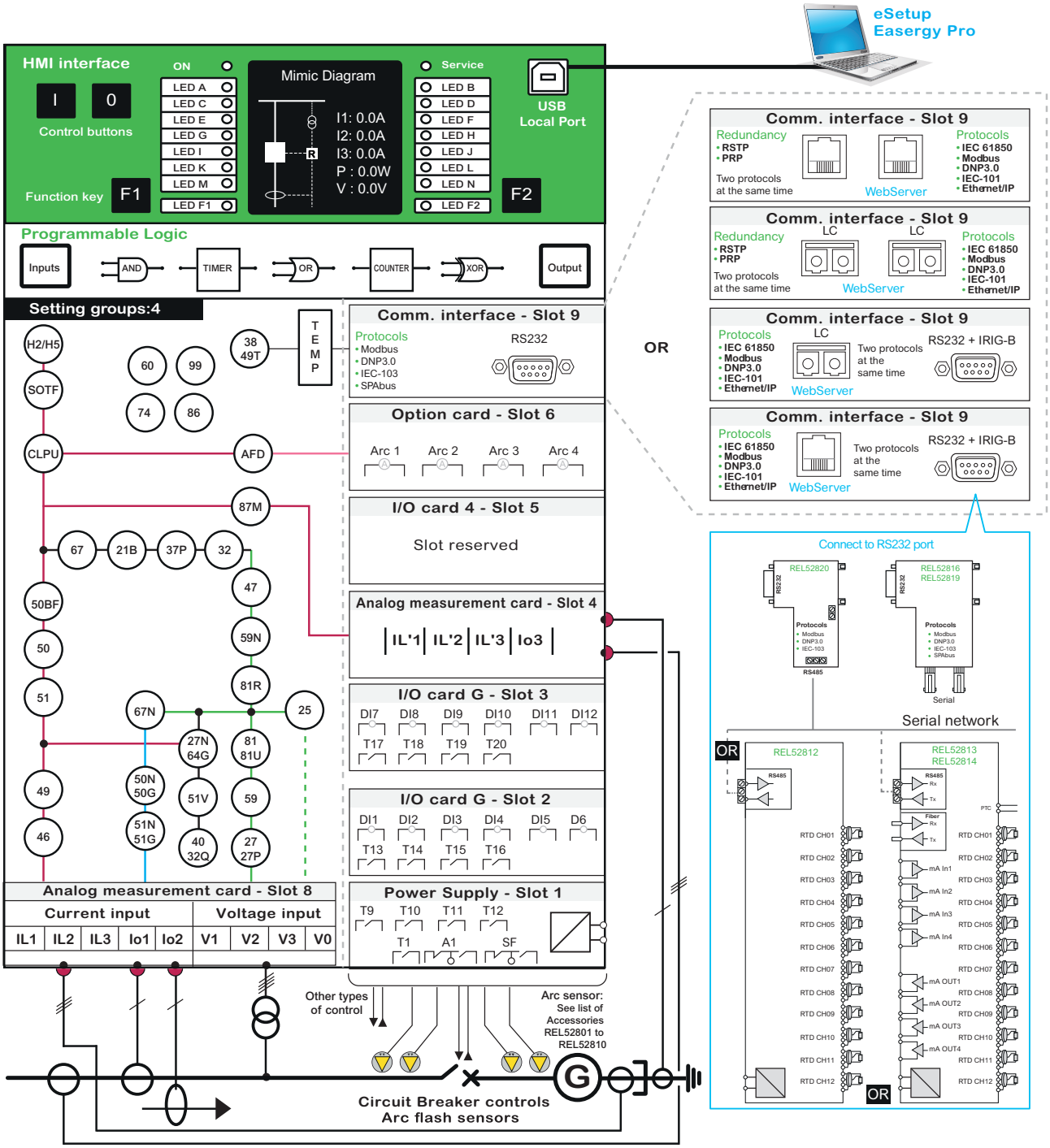

Life Is On Schneider Electric

Base Unit Presentation

Integrated Arc Flash Protection

PowerLogic P3 Advanced measures fault current, and with arc protection, also light via arc sensor channels that provide monitoring for the whole switchgear.

An arc flash is a mass of heat and pressure caused by a switchgear fault. It not only causes power outages but can also result in loss of business and extensive material damage. If an arc fault occurs in the switchgear, the arc protection system prevents the fault from spreading by tripping the circuit breaker within less than 10 ms.

PowerLogic P3 Advanced relays can connect up to four arc flash sensors that have continuous self-supervision to check the sensor status.

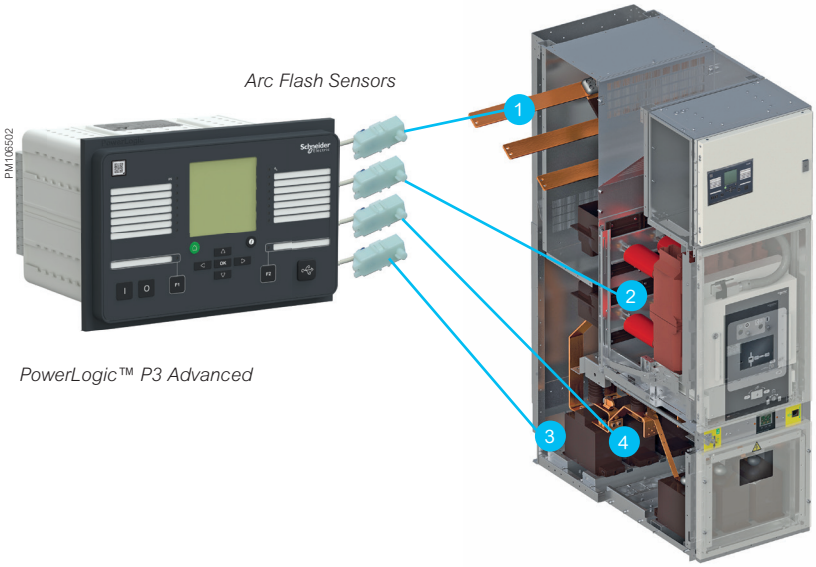

Example of Application

The four arc flash sensors can be installed in specific parts of the switchgear:

1. Busbars compartment
2. Circuit breaker compartment
3. Current/voltage transformers compartment
4. Cables connections compartment

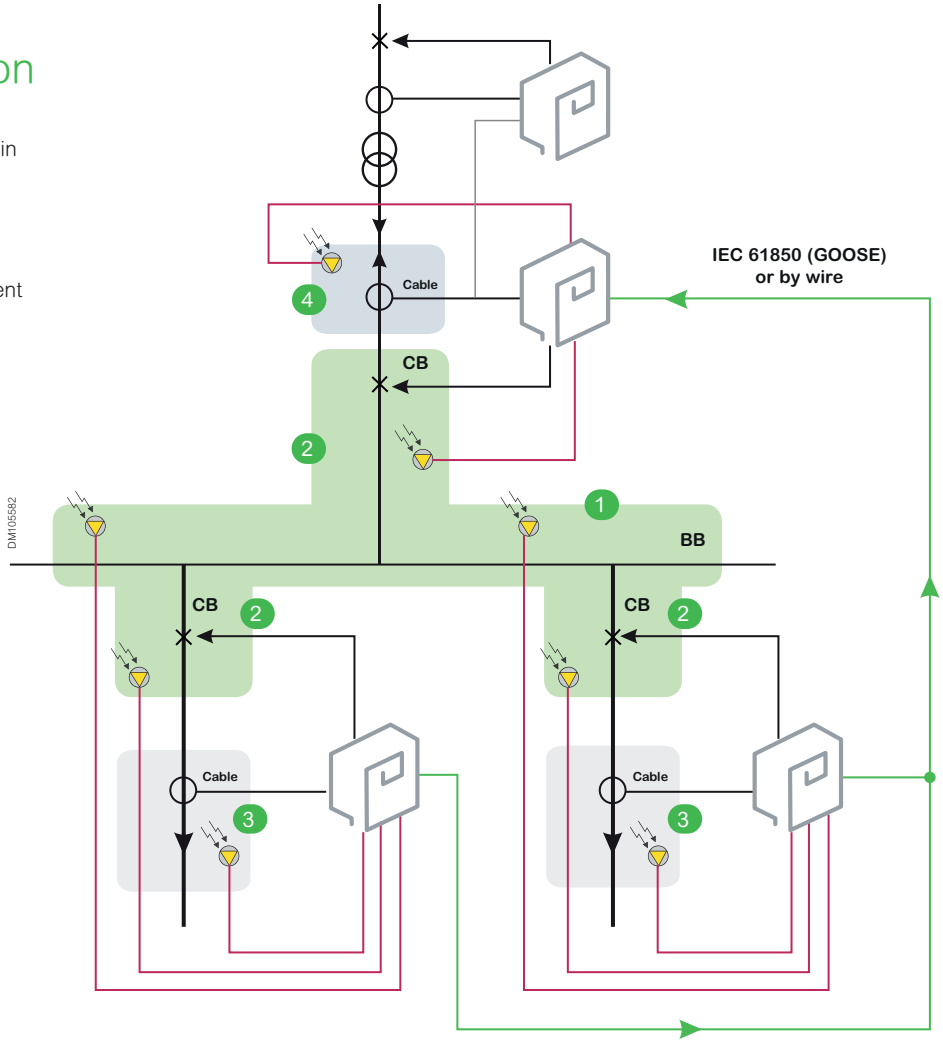

Base Unit Presentation

Local HMI

DM105603

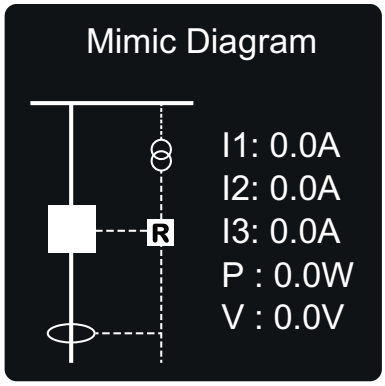

Single line diagram of the power system

Comprehensive Data for Easier and Faster Operation

All the data you require for a local equipment operation can be displayed on demand:

- Display the single line diagram and freely assignable analog values
- Display of all measurements
- Display of operation and alarm messages
- Display and setting of all parameters
- Password entry to protect parameter and protection settings

Ergonomic Data Presentation

- Keypad keys identified by pictograms for intuitive navigation
- Graphical 128x128 LCD screen displays any character or symbol
- Excellent display quality under all lighting conditions
- Control buttons (0/1) to operate the circuit breaker and/or others controlled object
- 14 freely programmable LEDs with 3 different colors (red, orange, and green) to identify easily the message shown
- Labels are printed on a transparent film allowing customization of the relay
- 2 programmable function keys (F1/F2)

i	INFO push-button for viewing additional information, entering the password view, and adjusting the LCD contrast
F1	Programmable function push-button
F2	Programmable function push-button
OK	ENTER push-button for activating or confirming a function
∧	UP navigation push-button for moving up in the menu or increasing a numerical value
∨	DOWN navigation push-button for moving down in the menu or decreasing a numerical value
<	LEFT navigation push-button for moving backwards in a parallel menu or selecting a digit in a numerical value
>	RIGHT navigation push-button for moving forwards in a parallel menu or selecting a digit in a numerical value
O	Circuit Breaker OFF push-button
I	Circuit Breaker ON push-button
⌂	HOME/CANCEL push-button for returning to the previous menu. To return to the first menu item in the main menu, press the button for at least three seconds

PM106371

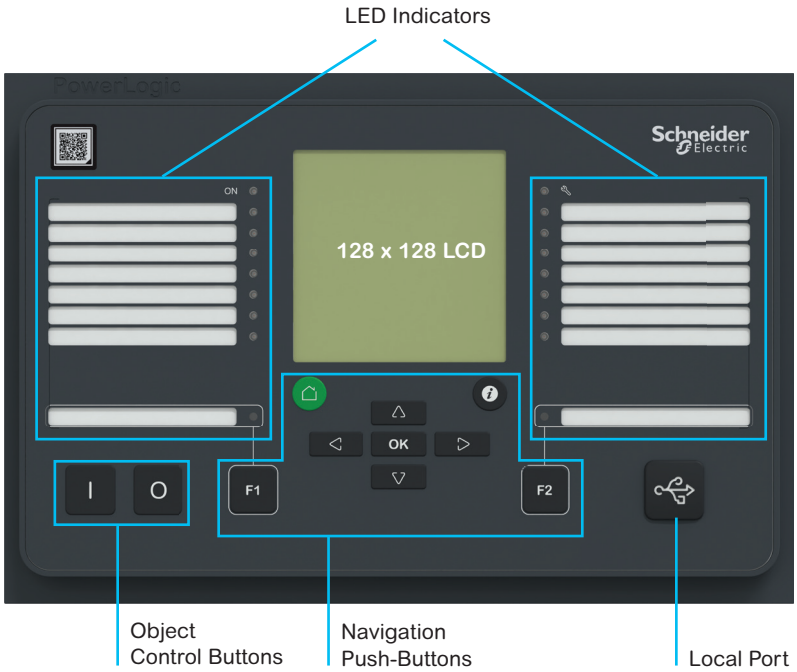

Working Language

All the texts and messages displayed on the PowerLogic P3 Advanced are available in two languages at the same time.

Life Is On Schneider Electric

Base Unit Presentation

Rear Panel

Rear Panel Example

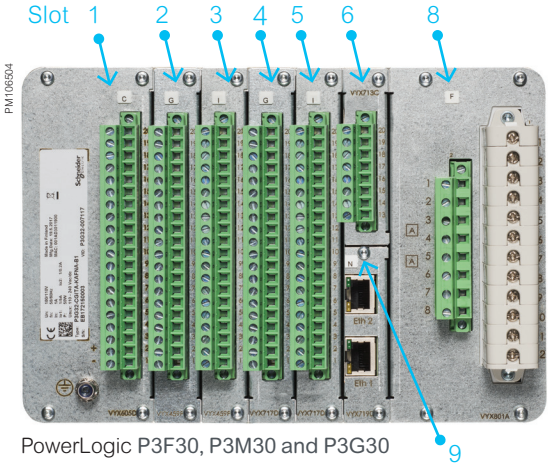

PowerLogic P3F30, P3M30 and P3G30

Slots description for P3x30 models

Slot 1 - Power supply and output contacts
Slot 2 - I/O card 1
Slot 3 - I/O card 2
Slot 4 - I/O card 3
Slot 5 - I/O card 4
Slot 6 - Option card 1
Slot 8 - Analog measurement card 1
Slot 9 - Communication interface

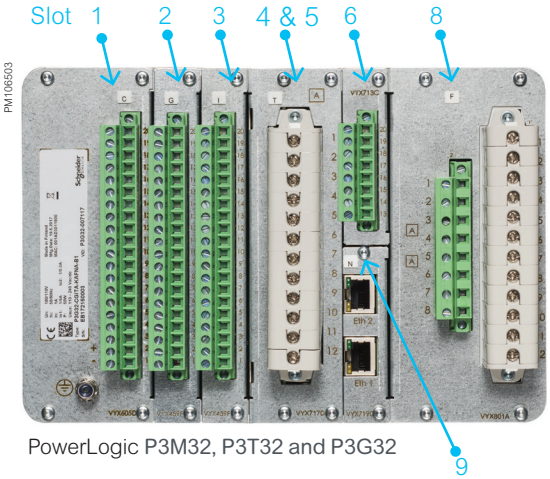

PowerLogic P3M32, P3T32 and P3G32

Slots description for P3x32 models

Slot 1 - Power supply and output contacts
Slot 2 - I/O card 1
Slot 3 - I/O card 2
Slot 4/5 - Analog measurement card 2
Slot 6 - Option card 1
Slot 8 - Analog measurement card 1
Slot 9 - Communication interface

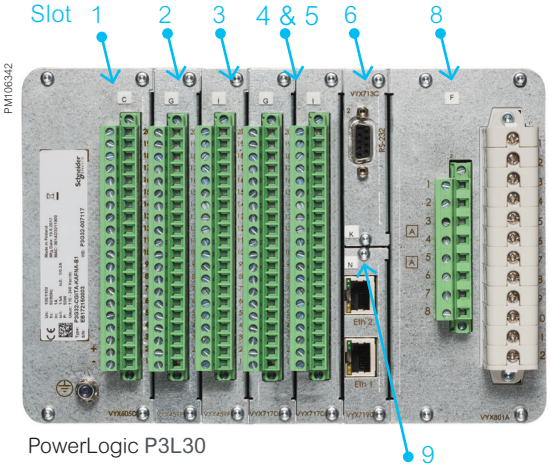

PowerLogic P3L30

Slots description for P3L30 models

Slot 1 - Power supply and output contacts
Slot 2 - I/O card 1
Slot 3 - I/O card 2
Slot 4 - I/O card 3
Slot 5 - I/O card 4
Slot 6 - Option card 1- Line differential com.
Slot 8 - Analog measurement card 1
Slot 9 - Communication interface

Base Unit Presentation

Rear Panel

Digital Input and Output Capability

The PowerLogic P3 Advanced has a modular concept in term of digital inputs and outputs.

Description of the optional boards

C = 5 x DO heavy duty, A1, SF
D = 5 x DO heavy duty, A1, SF
A = None
G = 6DI+4DO (6 x DI, 4 x DO)
H = 6DI+4DO (6 x DI, 4 x DO(NC))
I = 10DI (10 x DI)

Number of		Type of I/O card – P3X30				
Input	Output	Slot 1	Slot 2	Slot 3	Slot 4	Slot 5
6	11	C/D	G	None	None	None
12	15	C/D	G	G or H	None	None
18	19	C/D	G	G or H	G or H	None
24	23	C/D	G	G or H	G or H	G or H
22	16	C/D	G	G or H	I	None
32	16	C/D	G	G or H	I	I
28	19	C/D	G	G or H	G or H	I
16	11	C/D	G	I	None	None
26	11	C/D	G	I	I	None
36	11	C/D	G	I	I	I

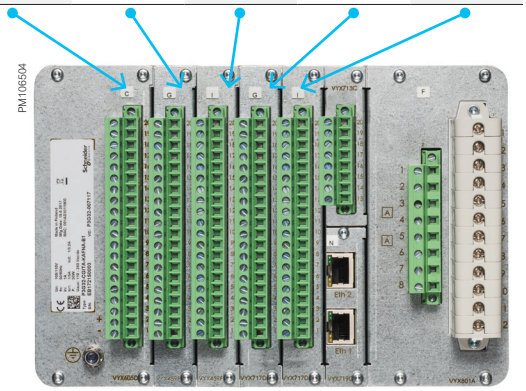

P3x30 units

Number of		Type of I/O card – P3X32				
Input	Output	Slot 1	Slot 2	Slot 3	Slot 4	Slot 5
6	11	C/D	G	None	None	None
12	15	C/D	G	G or H	None	None
16	11	C/D	G	I	None	None

The slots 4 and 5 are used to receive the analog current input when PowerLogic P3 is used with differential overcurrent (ANSI 87).

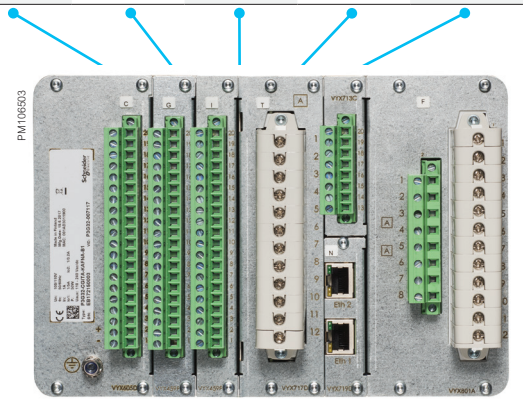

P3x32 units

Life Is On Schneider Electric

Base Unit Presentation

Remote HMI

This mounting technique allows for a lighter door because the relay's frame is installed in the back of the secondary compartment. Communication, DI, and DO cabling is easier, too, as the door movement does not need to be considered.

In this case, only the communication between IED base and display has to be wired.

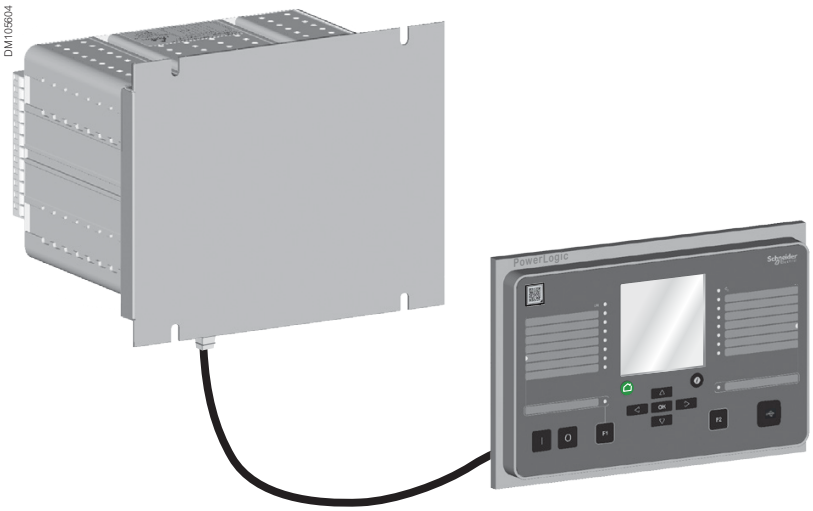

Life Is On Schneider Electric

Base Unit Dimensions

Dimensions

Conventional HMI

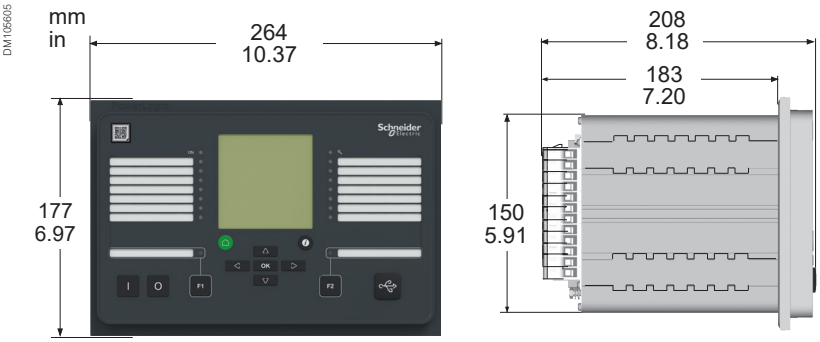

Remote HMI

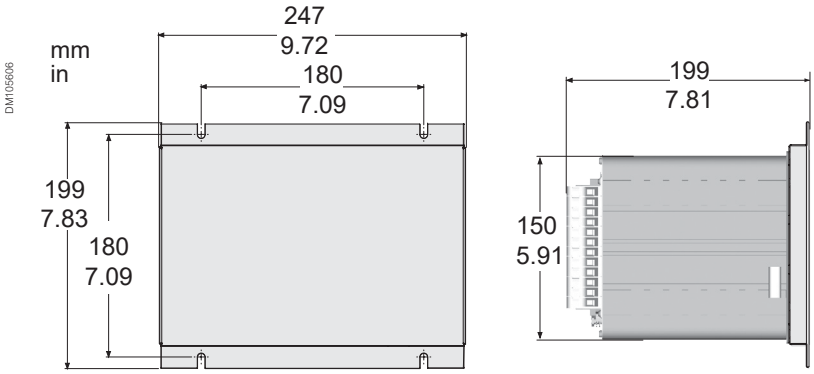

Weight (maximum)	
PowerLogic P3 Advanced	4.2 Kg (9.272 lb) or higher (depends of options)

Degree of protection (IEC 60529)
IP54 Front panel/IP20 Rear side

Life Is On Schneider Electric

Base Unit Dimensions

Cut-Out and Mounting

Cut-out accuracy must be complied with to ensure good withstand.

Mounting

In case the depth dimension behind the compartment door is limited, the IED can be equipped with a frame (REL52832) around the collar. This arrangement reduces the depth inside the compartment by 45 mm *(1.77 in)*.

Projection mounting with the raising frame REL52832

Panel mounting

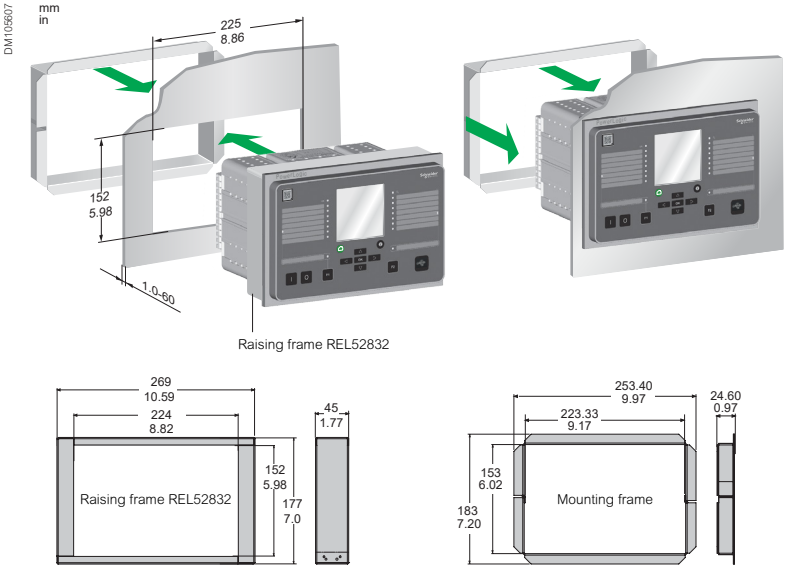

Wall Mounting with Remote HMI

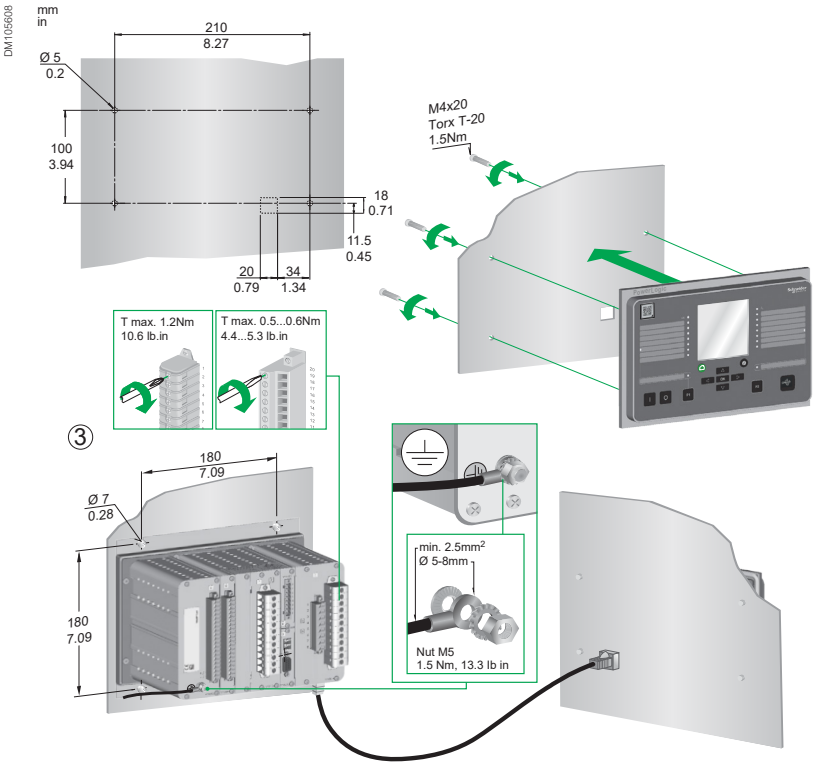

Life Is On Schneider Electric

Base Unit Characteristics

Technical Characteristics

Analog inputs

	Rated phase current	Measuring range	Input Impedance	Consumption	Rated thermal withstand	1-second overload	10-second overload
Phase Current Input (I) **Slot 8**	5 A CT	0.05...250 A	0.003 Ohm	0.075 VA	20 A	500 A	100 A
Residual Current Input (I0) **Slot 8 - 5 A CT** Configurable for CT secondaries 0.1 to 10A		0.015...50 A	0.003 Ohm	0.075 VA	20 A	500 A	100 A
Residual Current Input (I0') **Slot 8 - 1 A CT** Configurable for CT secondaries 0.1 to 10.0A		0.003...10 A	0.02 Ohm	0.02 VA	4 A	100 A	20 A
Residual Current Input (I0') **Slot 8 - 0.2 A CSH sensor** Configurable for CT secondaries 0.1 to 10.0A		0.0006...2 A	0.02 Ohm	0.02 VA	0.8 A	20 A	4 A
Phase Current Input - (I') **Slot 4** (Only for device with differential overcurrent)	1A CT	0.02...50 A	0.02 Ohm	0.02 VA	4 A	100 A	20 A
	5A CT	0.05...250 A	0.003 Ohm	0.075 VA	20 A	500 A	100 A
Residual Current Input (I0'') **Slot 4** (Only for device with differential overcurrent)	1A CT	0.02...50 A	0.02 Ohm	0.02 VA	4 A	100 A	20 A
	5A CT	0.05...250 A	0.003 Ohm	0.075 VA	20 A	500 A	100 A
Voltage Input Configurable for VT secondaries 50 to 120 V		0.5...190 V (100V/110 V)	n.a.	< 0.5 VA	250 V (Continuously)	n.a.	600 V

Analog temperature input/Analog output

Type of temperature sensor		Pt100	Ni100	Ni120	Cu10
Maximum distance between sensor and module		up to 2000 m(1)	up to 2000 m (1)	up to 2000 m (1)	up to 2000 m (1)
Analog Output	Minimum current	0 mA			
	Maximum current	20 mA			
Operating temperature:		0 °C (32 °F)...+55 °C (131 °F)			
Power supply	REL52811/REL52812	24...230 Vac/dc, 50/60 Hz			
	REL52813	24 Vdc			
	REL52814	48...230 Vac/dc, 50/60 Hz			

Digital Input

Nominal operation voltage	DI1 to DI16	24...230 Vac/dc	110...230 Vac/dc	220...230 Vac/dc
Typical switching threshold		12 Vdc	75 Vdc	155 Vdc
Input limit voltage	At state 1	≥ 19.2 Vdc	≥88 Vdc	≥176 Vdc
	At state 0	< 10.0 Vdc	<60 Vdc	<140 Vdc
Frequency		45...65 Hz	45...65 Hz	45...65 Hz
Typical consumption		<4 mA (typical approx. 3 mA)		
Voltage withstand		255 Vac/dc		

Digital Output

Type of contact		Control and Trip contact, Tx	Signal contact, A1	Signal Contact, SF
Rated Voltage		250 Vac/dc	250 Vac/dc	250 Vac/dc
Continuous current		5 A	5 A	5 A
Breaking capacity	AC	2.000 VA	2.000 VA	2.000 VA
	DC (L/R=40ms) at 48 Vdc	1.15 A	1 A	1 A
	at 110 Vdc	0.5 A	0.3 A	0.3 A
	at 220 Vdc	0.25 A	0.15 A	0.15 A
Making capacity	≤0.5 s	30 A	30 A	-
	≤3.0 s	15 A	15 A	-
Minimum making capacity		100 mA @ 24 Vac/dc	100 mA @ 24 Vac/dc	100 mA @ 24 Vac/dc
Typical operation time		<8 ms	-	-
Contact material		AgNi 90/10	AgNi 0.15	AgNi 0.15

Power supply

Nominal Voltage	110...240 Vac/dc	24...48 Vdc
Range	-20%/+10% (88...264 Vac/dc)	-20%/+20% (19.2–57.6 Vdc)
Inrush current (DC)	25 A with time constant of 1000 µs	
	25 A with time constant of 750 µs	
	15 A with time constant of 500 µs	
Power consumption	Power consumption increases when more I/O or optional I/O or communication cards are used Max. 50 W	
Acceptable momentary outages	<50 ms (110 Vdc)	

(1) 78,740 in

Life Is On Schneider Electric

Base Unit Characteristics

Environmental Characteristics

Disturbance Tests

	Standard and test class/level	Test value
Emission	**IEC/EN 60255-26 (ed3)**	
Conducted	EN 55022, Class A/CISPR 22	0.15...30 MHz
Emitted	EN 55011, Class A/CISPR 11	30...1000 MHz
Immunity	**IEC/EN 60255-26 (ed3)**	
Slow damped oscillatory wave 1MHz	IEC/EN 61000-4-18	±2.5kVp CM ±2.5kVp DM
Fast damped oscillatory wave 3MHz, 10 MHz and 30 MHz	IEC/EN 61000-4-18	±2.5kVp CM
Static discharge (ESD)	IEC/EN 61000-4-2 Level 4	±8 kV contact ±15 kV air
Emitted HF field	IEC/EN 61000-4-3 Level 3	80...2700 MHz, 10 V/m
Fast transients (EFT)	IEC/EN 61000-4-4 Level 4	±4 kV, 5/50 ns, 5 kHz
Surge	IEC/EN 61000-4-5 Level 4	±4 kV, 1.2/50 µs, CM ±2 kV, 1.2/50 µs, DM
Conducted HF field	IEC/EN 61000-4-6 Level 3	0.15...80 MHz, 10 Vrms
Power-frequency magnetic field	IEC/EN 61000-4-8	300 A/m (continuous) 1000 A/m 1–3 s
Pulse magnetic field	IEC/EN 61000-4-9 Level 5	1000 A/m, 1.2/50 µs
ac and dc voltage dips	IEC/EN 61000-4-29, IEC/EN 61000-4-11	0% of rated voltage • ac: ≥0.5 cycle • dc: ≥10 ms 40% of rated voltage • ac: 10 cycles • dc: 200 ms 70% of rated voltage • ac: 25 cycles • dc: 500 ms
ac and dc voltage interruptions	IEC/EN 61000-4-29, IEC/EN 61000-4-11	100% interruption • ac: 250 cycles • dc: 5 s
Voltage alternative component	IEC/EN 61000-4-17	15% of operating voltage (dc)/10 min

Mechanical robustness

	Standard and test class/level	Test value
In operation		
Vibrations	IEC 60255-21-1, Class II/IEC 60068-2-6, Fc	1 Gn, 10...150 Hz
Shocks	IEC 60255-21-2, Class II/IEC 60068-2-27, Ea	10 Gn/11 ms
Seismic	IEC 60255-21-3 Method A, Class II	2G horizontal/1G vertical, 1...35 Hz
De-energized		
Vibrations	IEC 60255-21-1, Class II/IEC 60068-2-6, Fc	2 Gn, 10...150 Hz
Shocks	IEC 60255-21-2, Class II/IEC 60068-2-27, Ea	30 Gn/11 ms
Bump	IEC 60255-21-2, Class II/IEC 60068-2-27, Ea	20 Gn/16 ms

Base Unit Characteristics

Environmental Characteristics

Electrical Safety

	Standard and test class/level	Test value
In operation		
Impulse voltage withstand	IEC/EN 60255-27	5 kV, 1.2/50 µs, 0.5 J 1 kV, 1.2/50 µs, 0.5 J Communication
Dielectric test	IEC/EN 60255-27	2 kV, 50 Hz 0.5 kV, 50 Hz Communication
Insulation resistance	IEC/EN 60255-27	
Protective bonding resistance	IEC/EN 60255-27	
Clearance and creepage distance	Design criteria for distances as per IEC 60255-27 Annex C (pollution degree 2, overvoltage category 3)	
Power supply burden	IEC 60255-1	

Environmental tests

	Standard and test class/level	Test value
In operation		
Dry heat	EN/IEC 60068-2-2, Bd	70 °C (158 °F)
Cold	EN/IEC 60068-2-1, Ad	-40 °C (-40 °F)
Damp heat, cyclic	EN/IEC 60068-2-30, Db	From 25 °C (77 °F)...55 °C (131 °F) From 93% RH to 98% RH Testing duration: 6 days
Damp heat, static	EN/IEC 60068-2-78, Cab	40 °C (104 °F) 93% RH Testing duration: 10 days
Change of temperature	IEC/EN 60068-2-14, Nb	Lower temp -40 °C (-40 °F) Upper temp 70 °C (158 °F) 5 cycles
Flowing mixed gas corrosion test, method 1	IEC 60068-2-60, Ke	25 °C (77 °F), 75% RH, 21 days 100 ppb H2S, 500 ppb SO_2
Flowing mixed gas corrosion test, method 4	IEC 60068-2-60, Ke	25 °C (77 °F), 75% RH, 21 days 10 ppb H2S, 200 ppb NO_2, 10 ppb CL_2, 200 ppb SO_2
In storage		
Dry heat	EN/IEC 60068-2-2, Bb	70 °C (158 °F)
Cold	EN/IEC 60068-2-1, Ab	-40 °C (-40 °F)

Environmental conditions

Ambient temperature, in-service	-40 °C (-40 °F)...60 °C (140 °F)(1)	
Ambient temperature, storage	-40 °C (-40 °F)...70 °C (158 °F)	
Relative air humidity	< 95%, no condensation allowed	
Maximum operating altitude	2000 m (6561.68 ft)	

(1) with 1 x raising frame -> maximum ambient temperature 55 °C *(+131 °F)*
with 2 x raising frame -> maximum ambient temperature 50 °C *(+122 °F)*

Life Is On Schneider Electric

Communication

Communication Protocols

PowerLogic™ P3 Advanced can be connected to networks, providing access to the following type of data:

- Events
- Status information
- Measurements
- Control commands
- Clock synchronizing
- Settings (SPA-bus and embedded SPA-bus only)

PM106362

EcoStruxure™ Power Device app

Main Protocols

PowerLogic P3 Advanced can be connected directly to serial and/or Ethernet protocols with two different protocols at the same time, selected by eSetup Easergy Pro software.

Communication protocols:

Serial protocols - RS232/ RS485/serial Fiber Optic (*) port
Modbus RTU
DNP3.0
IEC 60870-5-101
IEC 60870-5-103
ProfibusDP (*)
SPA-Bus (*)
Ethernet protocols - RJ45/LC port
IEC61850 ed1 & ed2
Modbus TCP
IEC60870-5-101
DNP3.0
Ethernet IP

Communication ports:

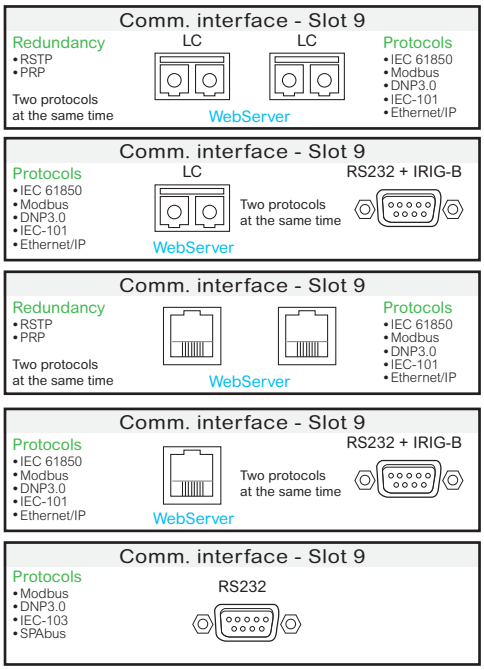

**Need external accessories to connect.*

PM106576

PowerLogic P3 web-HMI

Redundancy Protocols (RSTP or PRP)

When the devices are connecting in Ethernet link and demand for higher availability, PowerLogic P3 Advanced can use Rapid Spanning Tree Protocol (RSTP) or Parallel Redundancy Protocol (PRP) to recover from a network failure.

PowerLogic™ P3 Web-HMI

A webserver is available in all PowerLogic P3 Advanced to get information from the device to monitoring all data, send command and change protection setting.

Life Is On Schneider Electric

Programmable Stages

Programmable Protection Function

Personalize your Protection Function

PowerLogic P3 Standard enables you to create or personalize the protection function when you need to achieve specific levels of protection.

There are now eight stages available to use with various applications. Each stage can monitor any analog (measured or calculated) signal and issue start and trip signals. Programmable stages extend the protection functionality of the manager series to a new level. The Programmable stage has the possibility of comparing two freely selectable signals between each other. Using this feature, you can create a comparison function using the relay's own measured or calculated signals. One or both signals can be connected to the comparison function over GOOSE.

For example, if four stages of frequency are not enough, it is possible to reach a maximum of 12 using programmable stages. Other examples include using the stages to issue an alarm when there are too many harmonics (THD) or indicating reverse power condition by GOOSE.

EM100170

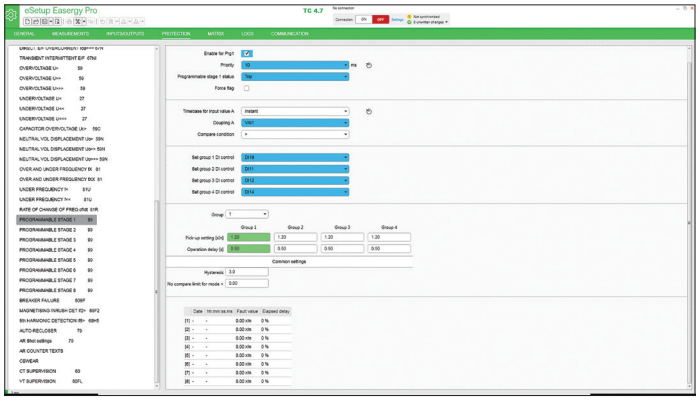

Life Is On Schneider Electric

Circuit Breaker Control

With PowerLogic P3 Advanced, you get intuitive functionality to protect your electrical network system.

Main CB functions are:

- Trip circuit supervision (ANSI 74)
- CT/VT supervision (ANSI 60/60FL)
- Latching (ANSI 86)
- CB close/open order
- Number of operations
- Circuit breaker operating time
- Charging time
- Cumulative breaking current
- Personalized functions

Maximize Circuit Breaker Control

PowerLogic P3 Advanced is the simplest protection relay with mimic diagram with control buttons (open and close), two personalized function keys and 14 configurable bicolor LEDs. You can manage the control without external or additional components.

Example of Implementation

The schematic is structured for typical use in MV switchgear, 100% adapted for your use case. You can change the internal logic to adapt the PowerLogic P3 to meet your needs.

If a problem occurs, clear and concise information allows users to make the right decisions at the right time.

This electrical schematic can facilitate the IEC 61850 implementation because all the logics are done by the protection unit that will make the decisions and, if necessary, send GOOSE messages to other units.

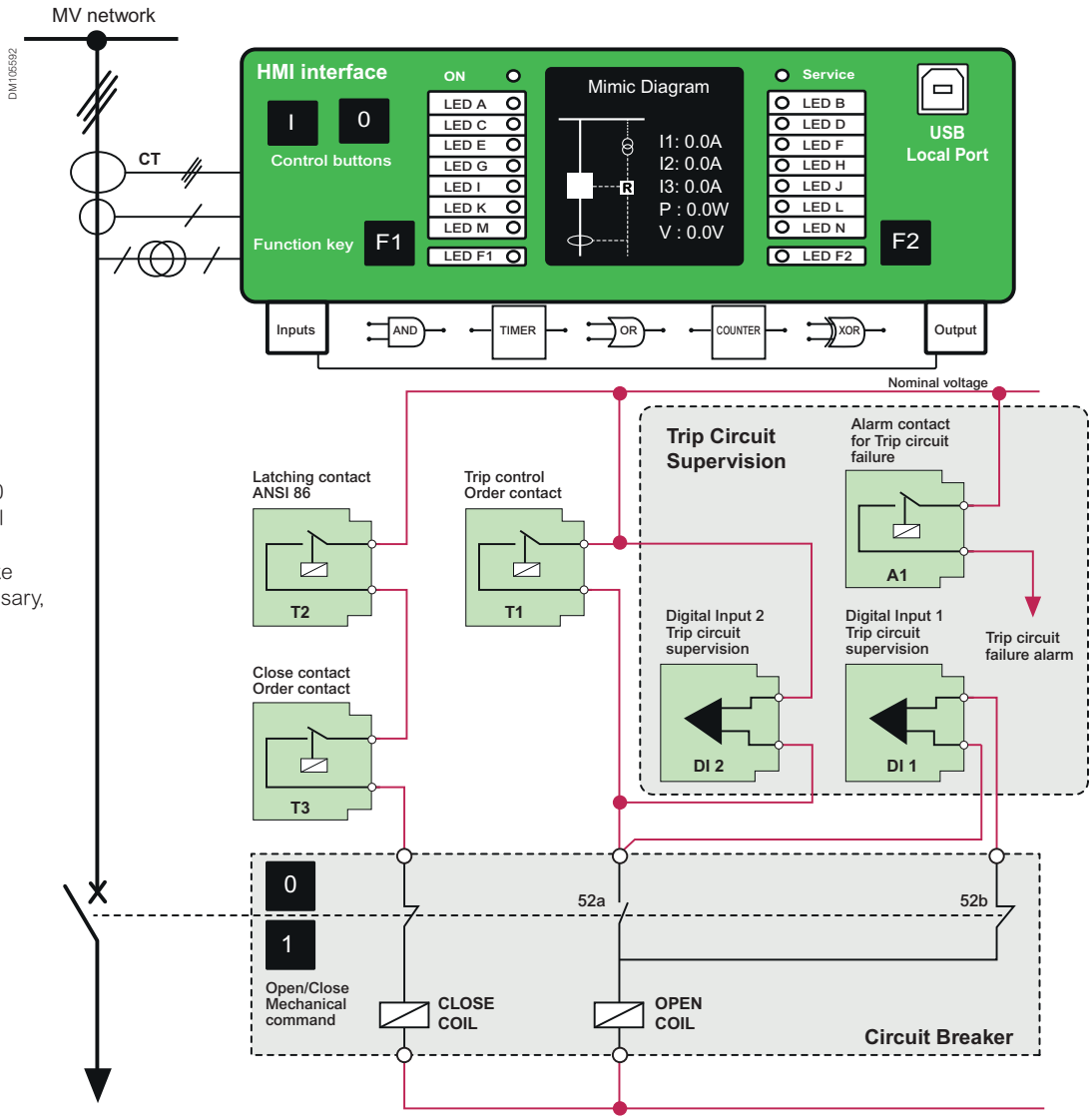

Power Quality Measurements

DM105651

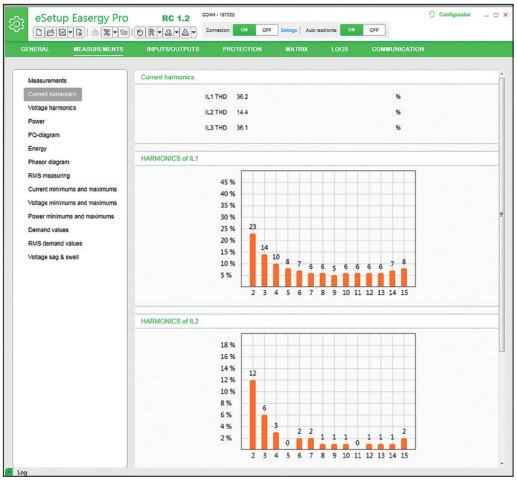

Power Quality

The power quality of electrical networks has become increasingly important in modern society. Sophisticated loads, such as computers and automation systems, require an uninterrupted supply of "clean" electricity. PowerLogic P3 Advanced provides integrated power quality measuring and analysis functions, which help to reduce variations in the quality of the distributed power. The terminal supervises the harmonics of phase currents and voltages from the 2nd to the 15th order and the THD (total harmonic distortion).

One of the most important power quality functions is the monitoring of voltage sags and swells. PowerLogic P3 Advanced provides separate monitoring logs for sags and swells. The fault log comprises four registers for voltage sags and another four for voltage swells.

The disturbance recorder functionality can be used for recording measured currents and voltages and for recording status information of digital inputs and outputs, also including the signals of the arc protection system. The time stamped recordings provide indispensable information for the subsequent analysis of a fault situation.

Example of harmonics content and voltage sag/swell registration
(obtained from an PowerLogic P3 Advanced protection relay)

Many functions in modern society rely heavily on electrical energy, so the quality of the energy supply is gaining increased importance.

Power Quality Data in PowerLogic P3 Advanced	
THD of IL1, IL2 and IL3	Total harmonic distortion of phase currents
H of IL1, Il2 and IL3	Harmonics phase current up to 15th
THD of U	Total harmonic distortion of phase to phase or phase to ground voltages
H of U	Harmonic of phase to phase or phase to ground voltage up to 15th
Sag and swell	
Voltage interruptions	

Life Is On Schneider Electric

Connection Diagrams

PowerLogic™ P3x30

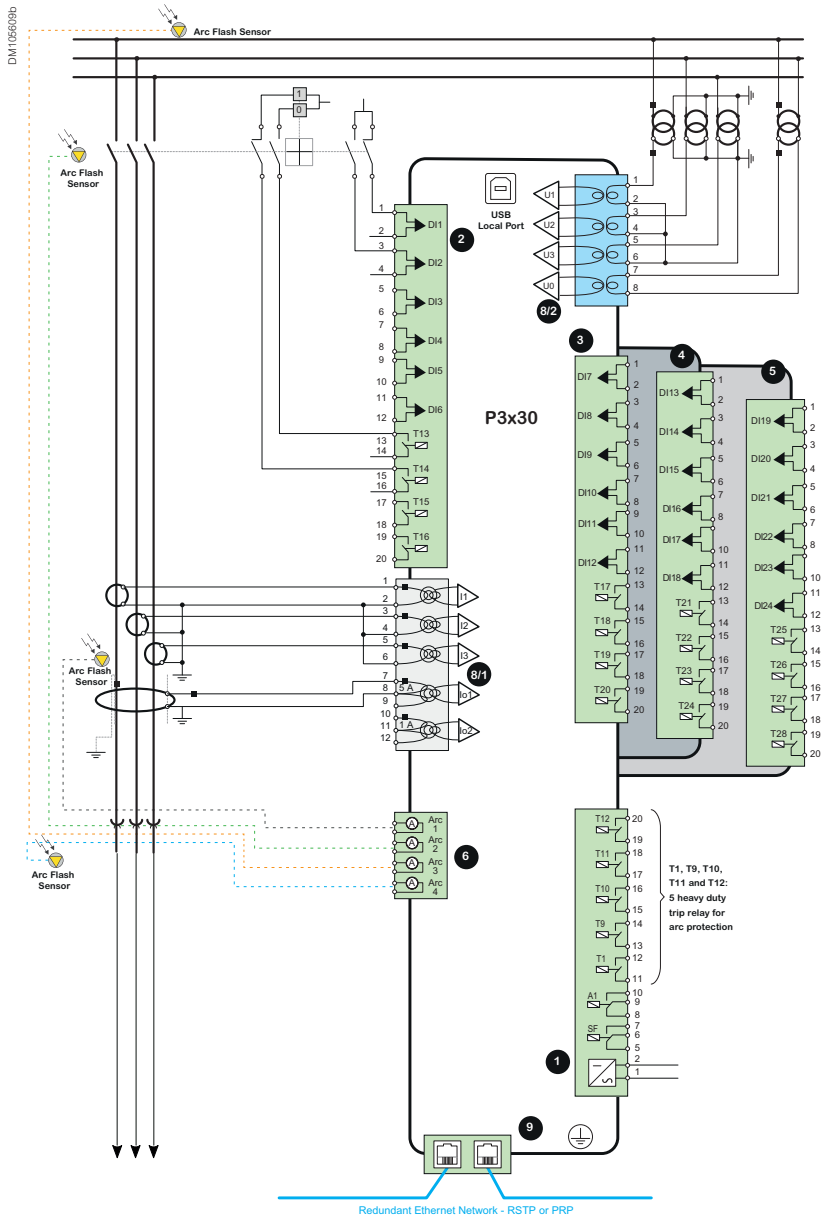

Note: Dangerous environment, make sure to read all information, including warning instructions (left).

Life Is On Schneider Electric

Connection Diagrams

PowerLogic™ P3x32

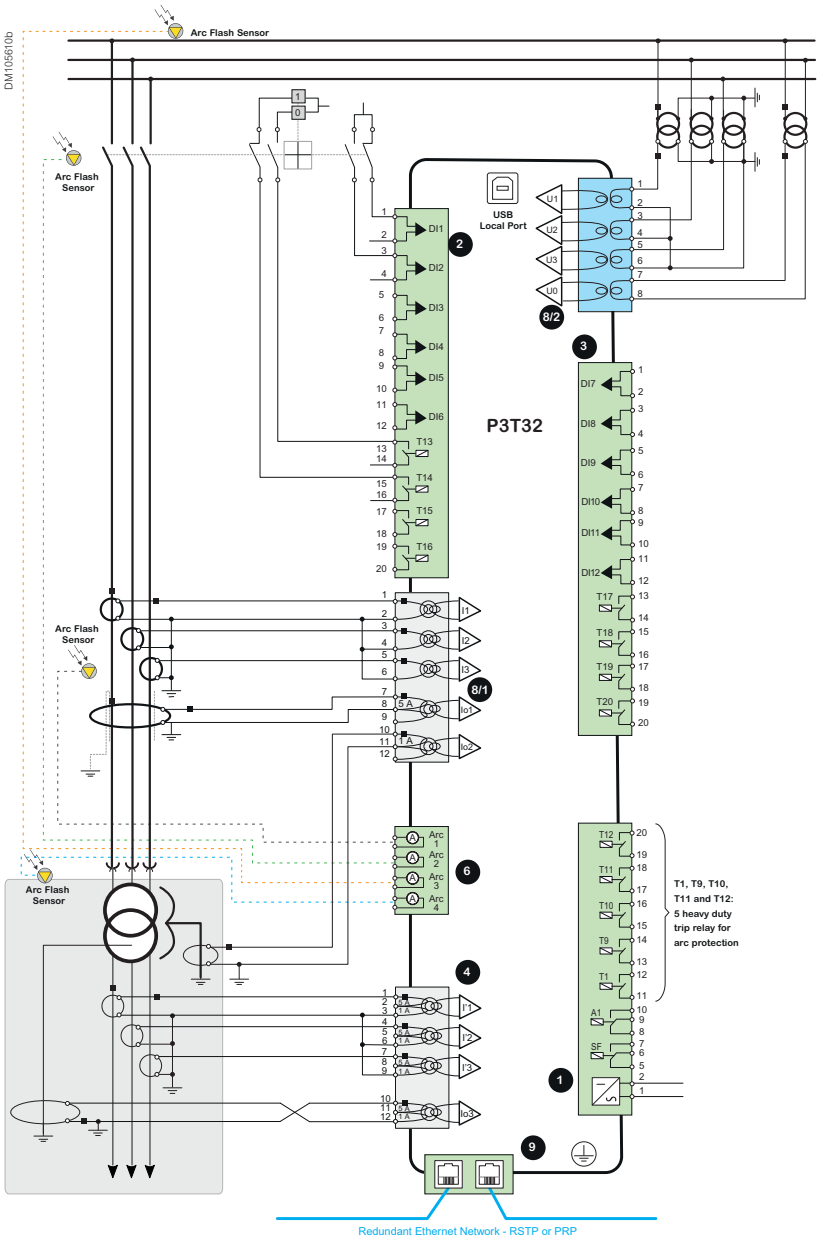

Note: Dangerous environment, make sure to read all information, including warning instructions (left).

Life Is On Schneider Electric

Connection Diagrams

PowerLogic™ P3L30

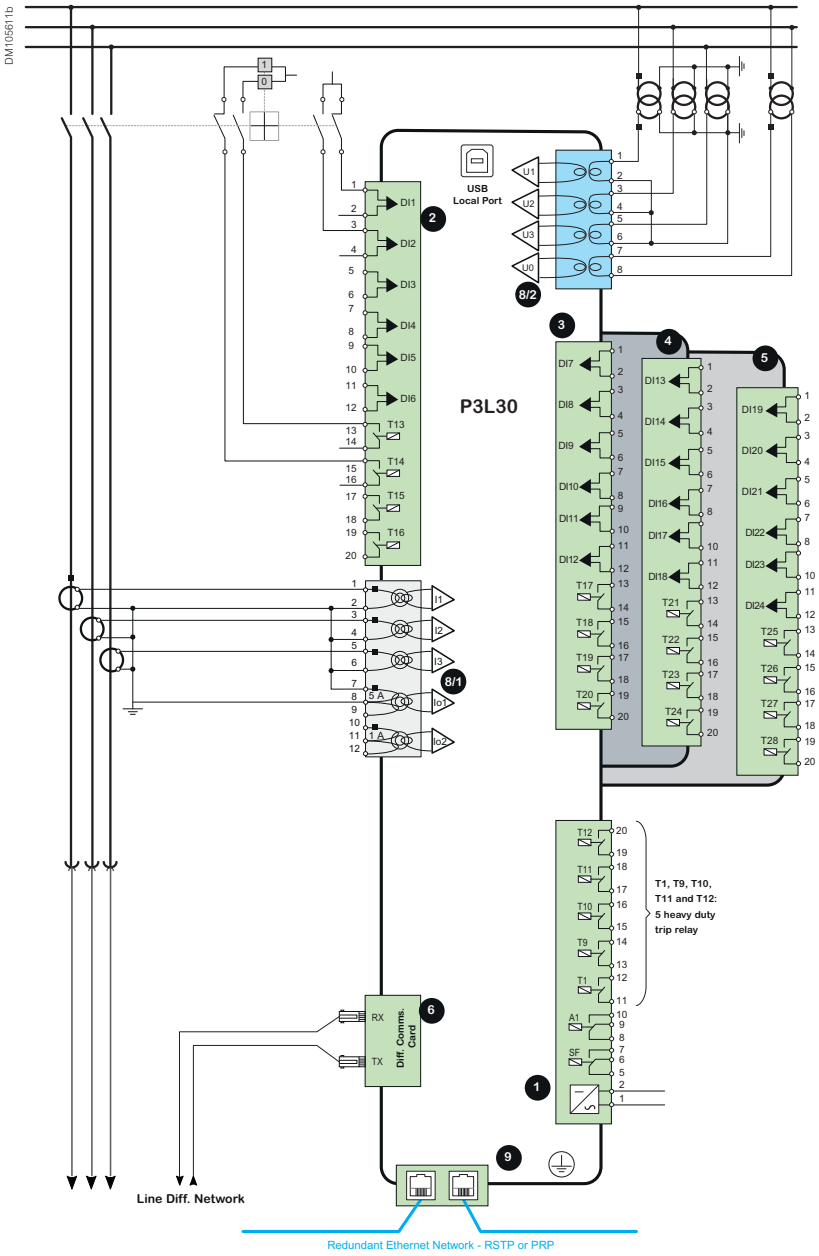

Note: Dangerous environment, make sure to read all information, including warning instructions (left).

Life Is On Schneider Electric

Model Selection

Selecting Product

Please, consult the “Ordering” section to choose specific characteristics in the relays for your system:

PM106371

P3F30 Feeder Application	Page 119
P3L30 Line Application	Page 120
P3M30 Motor Application	Page 121
P3G30 Generator Application	Page 124

PM106371

P3T32 Transformer with Differential Application	Page 123
P3M32 Motor with Differential Application	Page 122
P3G32 Generator with Differential Application	Page 125

Or use our web configuration tool:

Go to web configurator

Life Is On Schneider Electric

Notes

Life Is On | Schneider Electric

PowerLogic™ Digital experience

PowerLogic™ Digital Experience

PowerLogic™ P3 Software	**84**
Presentation	84
eSetup Easergy Pro	**86**
eSetup Easergy Pro During Engineering	86
eSetup Easergy Pro During Commissioning	87
eSetup Easergy Pro During Operation	88
PowerLogic™ Web-HMI	**89**

PowerLogic™ P3 Software

Presentation

Minimum requirements for running eSetup Easergy Pro:

- **Windows 7 or higher**
- **512 MB RAM**
- **50 MB Disk space**

eSetup Easergy Pro

eSetup Easergy Pro offers full facilities to set up PowerLogic relays. Intuitive and simple, eSetup Easergy Pro is a user-oriented interface to assist you during the engineering, commissioning, and operation of PowerLogic protection relays.

It's streamlined workflow and graphical representations has been designed to smooth your configuration process.

The software is available for download on the Schneider Electric website.

Use eSetup Easergy Pro in standalone mode during engineering to prepare the configuration.

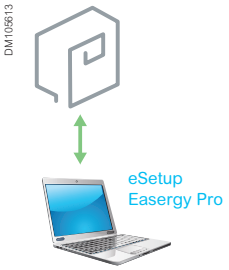

Connect the PC running eSetup Easergy Pro to the USB port of the PowerLogic protection relay during commissioning to adjust the settings and test the relay.

For connection to PowerLogic P3, use the REL52822 connection cord

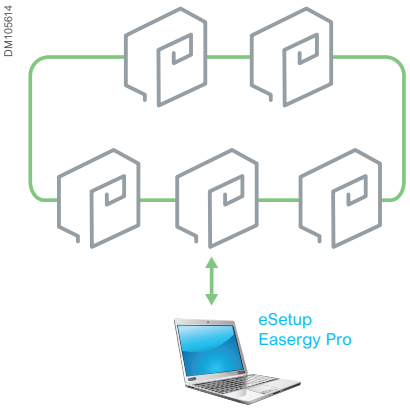

Connect the PC running eSetup Easergy Pro to the Ethernet network during operation to retrieve data from the relays and update the system.

Life Is On Schneider Electric

PowerLogic™ P3 Software

Presentation

eSetup Easergy Pro at Each Step of the Digital Life

DM105615

eSetup Easergy Pro

During Engineering

- Create the configuration of the PowerLogic P3 relay: select the appropriate options and receive the order code
- Set the characteristics of the CTs, VTs, or sensors connected to the relay, and select the protection functions that will be activated and their settings
- Build a specific logic, if required, using a graphic editor
- Map the digital inputs of the relay and different internal signals to the relevant functions, LEDs, and digital outputs, using a straightforward matrix format
- Draw the single-line diagram that will appear on the front display of the relay for switchgear control and select the measurements that will be displayed. If any, build the interlocking logic using a matrix format
- For IEC 61850 protocol, configure the data set and the report control blocks that will be published and select the GOOSE data to which you want to subscribe
- Complete the setting of additional functions (disturbance recorder, event logging system, clock synchronization, etc.).

EM106160

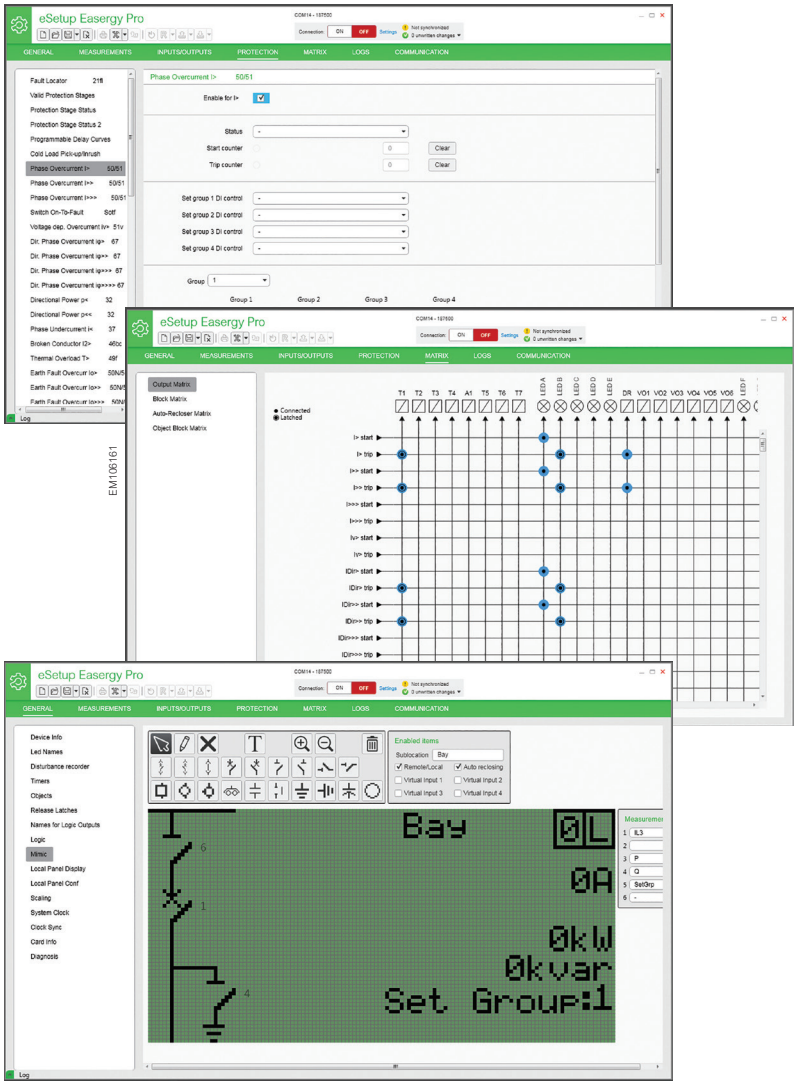

EM106161

EM106162

Life Is On Schneider Electric

eSetup Easergy Pro

During Commissioning

- Connect to the front panel of one single relay or access several relays by connecting to Ethernet
- Open the Digital Inputs menu to check the status of inputs. Reverse the polarity or add a filtering delay if necessary
- Open the Relays menu and force the status change of the output relays to check the wiring
- Open the Phasor Diagram menu to see in real time the phasor of injected currents and voltages and the value
- Use virtual injection for testing protection settings and circuit breaker tripping and for checking LEDs and connected outputs
- Open the Logic or the Matrix menu if the logic needs to be tested. The active signals appear in a different color and are updated in real time. Changes in the logic or in the matrix can be made and applied to the relay smoothly.

EM106163

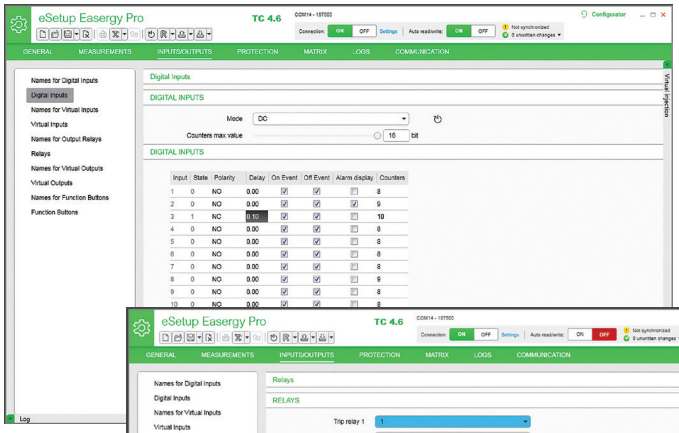

EM106164

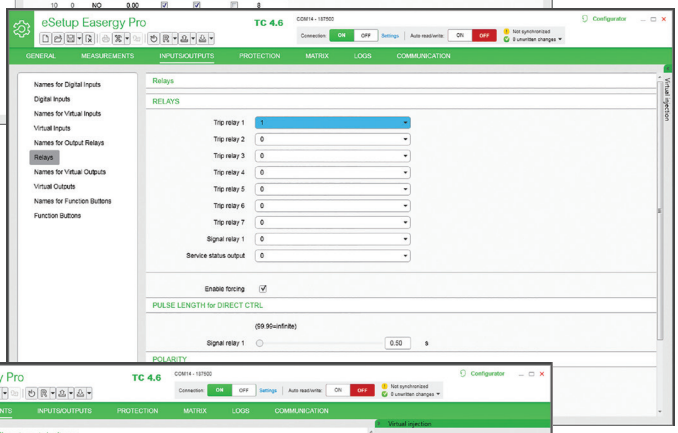

EM106165

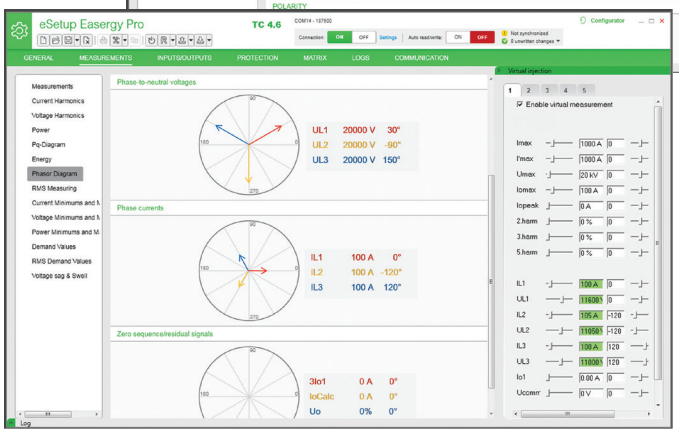

Life Is On Schneider Electric

eSetup Easergy Pro

During Operation

- Connect to the front panel of a single relay or gain access to several relays by connecting to Ethernet
- During normal operation, get the most of the metering capabilities of the PowerLogic protection relay:
  - Open the different Measurements menus to access the power monitoring and power quality data
  - Open the disturbance recorder menu to get a waveform capture or program the recording of a power trend
- After a trip, use eSetup Easergy Pro to understand the fault:
  - Check the fault log of the protection that has tripped the circuit breaker
  - Download the disturbance record from the PowerLogic P3 and display it with a disturbance recorder evaluation tool, e.g. Wavewin.

EM106166

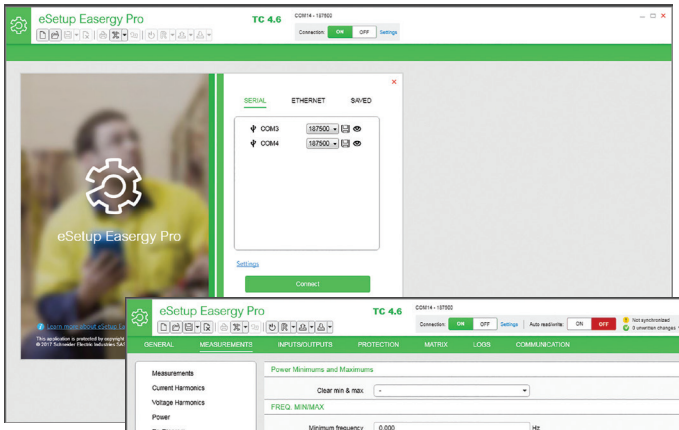

EM106167

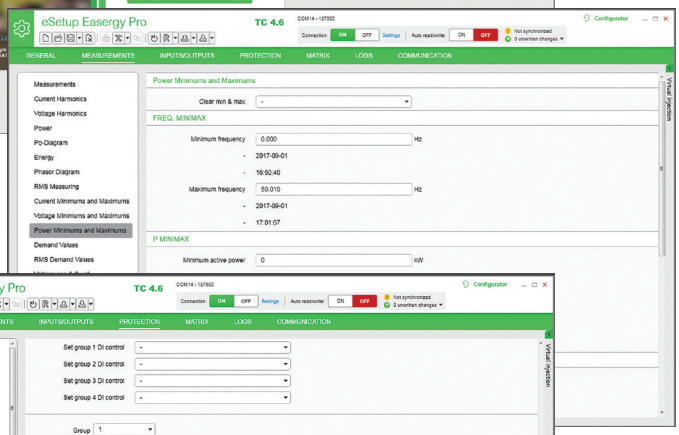

EM106168

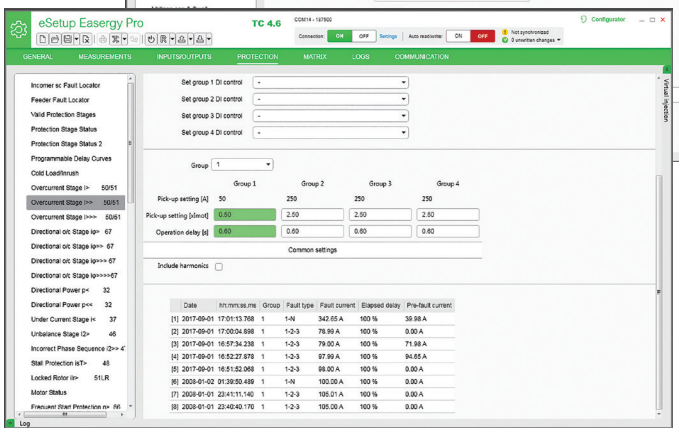

Life Is On Schneider Electric

PowerLogic™ Web-HMI

Description

Enhance operational efficiency

- **Direct access to protection and communication settings**
- **Control and monitoring of circuit breakers and switches**
- **Mirror HMI function**
- **Direct access to measurements including the graphic phasors**
- **Device diagnosis**
- **MATRIX status**
- **Access to logs and other information**

Boost Operational Efficiency with the Embedded Web-HMI

Quickly and conveniently configure, monitor, and operate your PowerLogic P3 protection relay with our web-HMI. The web-HMI, accessible online via IP address of the relay, doesn't require you to install specific computer software-simply use your web browser to connect to the device. You only need to enable the web server service during the initial configuration of PowerLogic P3 with eSetup Easergy Pro. The web-HMI is based on the same page design as eSetup Easergy Pro, making it easy to use!

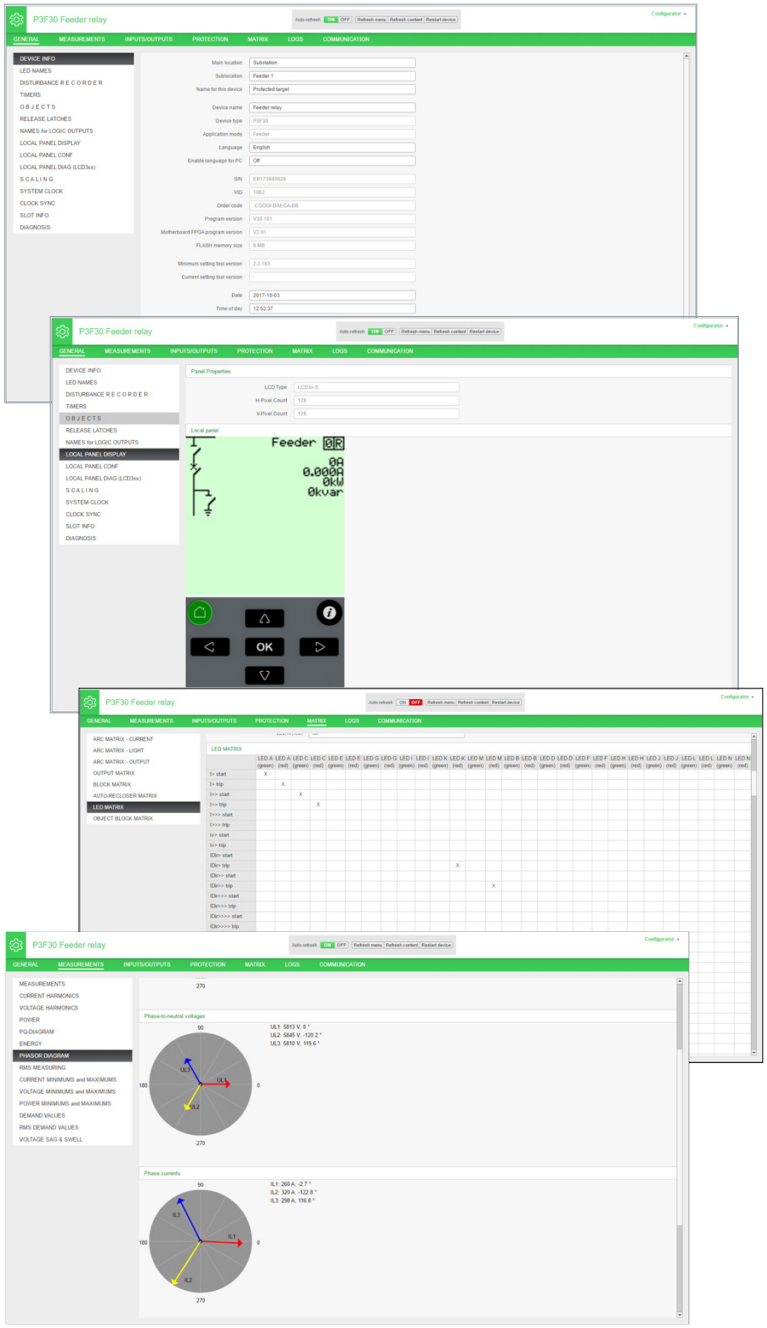

Life Is On Schneider Electric

Additional Modules and Accessories

Additional Modules and Accessories

Connection Cables	92
Communication Modules	94
Temperature and Analogue Input and Output Modules	96
LPVT & LPCT Option	98
Arc Flash Sensors	103
Other Accessories	105

Connection Cables

Description

Cables for PowerLogic™ P3 Standard

The cables can be used for connecting external option modules to the PowerLogic P3 Standard. The device is equipped with I/O communication model E or F, where RS232 interface is available.

PM106969

REL52825 (VX082)

A remote port is available when a REL52825 cable is used. The cable contains a connector for the RS-232 interface of the PowerLogic P3 Standard and a D9-connector for the external option module.

Length	**2.5 m** (78.74 in)

PM106980

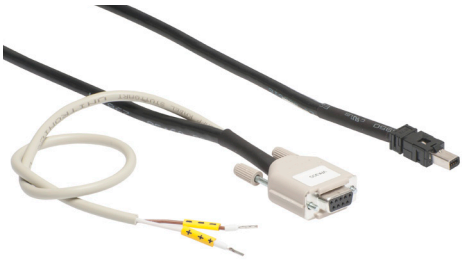

REL52827 (VX084)

The cable contains a connector for the RS-232 interface of the PowerLogic P3 Standard and a D9-connector for the REL52815 Profibus interface module.
An extension port is available for the REL52827 in PowerLogic P3 Standard.

Length	**3.0 m** (118.11 in)

PM106970

REL52826 (VX083)

Remote and extension ports are available, in addition to IRIG-B clock synchronization, when the REL52826 cable is used. The REL52826 cable contains a connector for the RS-232 interface of the PowerLogic P3 Standard and a 3-piece D9-connector for the external option module and IRIG-B.

Length	**2.5 m** (78.74 in)

Life Is On Schneider Electric

Connection Cables

Description

Cables for PowerLogic™ P3 Advanced

The cables can be used for connecting external option modules to the PowerLogic P3 Advanced. The device is equipped with I/O communication model B, C or D, where RS232 interface is available.

PM106978

REL52823 (VX067)

Remote and extension ports are available when the REL52823 cable is used. The REL52823 cable contains a connector for the RS232 interface of PowerLogic P3 Advanced and 2-piece D9-connector for the external option modules.

Length	**3.0 m** (118.11 in)

PM106943

REL52838 (VX086)

Remote and extension ports are available in addition to IRIG-B clock synchronization when the REL52838 cable is used. The REL52838 cable contains a connector for the RS232 interface of PowerLogic P3 Advanced and 3-piece D9-connector for the external option modules and IRIG-B.

Length	**3.0 m** (118.11 in)

PM106979

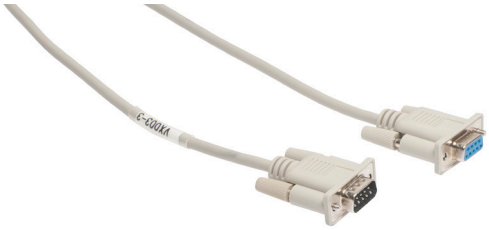

REL52824 (VX072)

The cable contains a connector for the RS232 interface of PowerLogic P3 Advanced and D9-connector for the REL52815 Profibus interface module. An extension port is available for the REL52824 in PowerLogic P3 Advanced.

Length	**3.0 m** (118.11 in)

Cables for all PowerLogic™ P3 models

PM106976

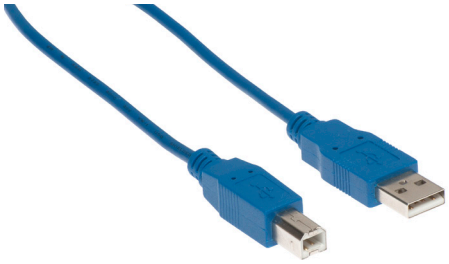

Front face USB Cable - REL52822 (VX052-3)

The PowerLogic P3 protection relays have a USB-connector in the front panel. Use eSetup Easergy Pro setting software with USB cable to set the device.

Length	**3.0 m** (118.11 in)

Communication Modules

Network Interface Modules

PM106581

RS232 to RS485 network - REL52820

The external RS485 interface REL52820 is used to connect PowerLogic P3 devices to the RS485 network. With the RS485 serial interface module it is possible to have following serial protocols in use.

Characteristics	
Distance (maximum)	200 m *(7,874.02 in)*
Devices (maximum)	32
Type of fiber optic connector	PIN (3)
Type of RS232 connector	9-pin DSUB connector
RS485 type	2-wire
Serial protocols	Modbus, DNP3.0, IEC870-5-103 and SpaBus
Power supply	From RS232 port or external–12 Vdc

To connect the interface with:
PowerLogic **P3 Standard** devices, use **REL52825** cable
PowerLogic **P3 Advanced** devices, use **REL52823, REL52824 or REL52838** cable if needed

PM106586

RS232 to fiber optic network - REL52816 to REL52819

An external fiber optic interface is used to connect PowerLogic P3 devices to a fiber optic loop or a fiber optic star network. The options include two different types of serial fiber optic modules.

Characteristics	REL52819	REL52816
Distance (maximum)	30 m (1,181 in)	1,000 m (39,370 in)
Type of fiber optic	Plastic-Plastic	Glass-Glass
FO diameter	1 mm	62.5/125 uM
Devices (maximum)	32	32
Type of fiber optic connector	HP Versalink Snap-in connector	ST
Interface	9-pin DSUB connector	
Serial protocols	Modbus, DNP3.0, IEC870-5-103 and SpaBus	
Power supply	From RS232 port or external–12 Vdc	

To connect the interface with:
PowerLogic **P3 Standard** devices, use **REL52825** cable
PowerLogic **P3 Advanced** devices, use **REL52823, REL52824 or REL52838** cable if needed

Life Is On Schneider Electric

Communication Modules

Network Interface Modules

PM106585

Profibus network interface - REL52815

External Profibus interface REL52815 is used to connect PowerLogic P3 devices to the Profibus network.

Characteristics	
Interface	9-pin DSUB connector (Female)
Transfer method	RS485, Half-duplex
Transfer cable	Twisted pair (1 pair and shield)
Electrical isolation	500 Vdc
Serial protocols	Profibus DP
Baud rate	9.6 kBaud...12 Mbaud
Power supply PowerLogic *P3 Standard:* PowerLogic *P3 Advanced:*	 External–12 Vdc From RS232 port or external–12 Vdc
To connect the interface with: PowerLogic **P3 Standard** devices, use **REL52827** cable PowerLogic **P3 Advanced** devices, use REL52824 cable	

Life Is On Schneider Electric

Temperature and Analog Input/Output Modules

For PowerLogic™ P3

The temperature module is supplied ready for operation with:

- **PowerLogic P3U20, P3U30 with RS485 communication port direct**
- **PowerLogic P3U20, P3U30, and P3X3x with RS232 communication port by REL52820 external RS485 interface**
- **PowerLogic P3U20, P3U30, and P3X3x with RS232 communication port by REL52816 to REL52819 external fiber optic interface**

Function

The temperature modules can be used to connect temperature sensors from the field to the PowerLogic P3 devices using a communication port RS485 by twist-pair or fiber optic.

The temperature measurement is utilized by the following protection functions in transformer and motor application:

- Thermal overload
- Temperature monitoring
- Customized logic or custom protection function

The modules REL52813 and REL52814 have analog input and output to use in the special control functions.

DM 10 5526

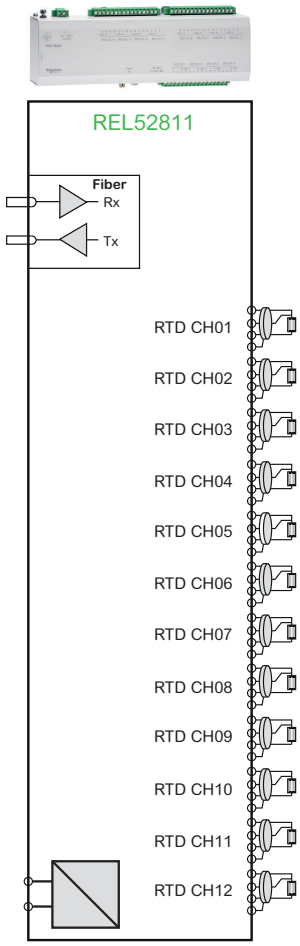

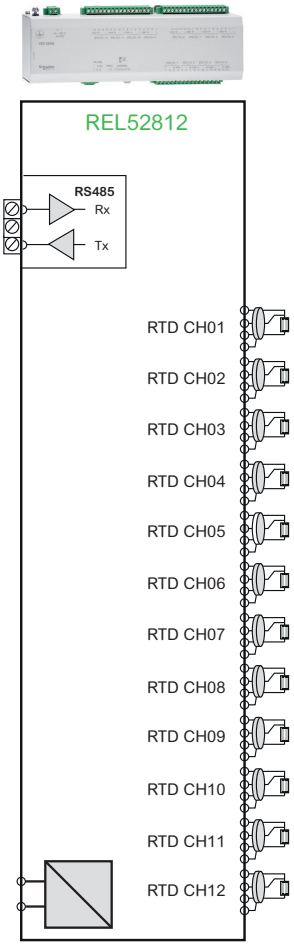

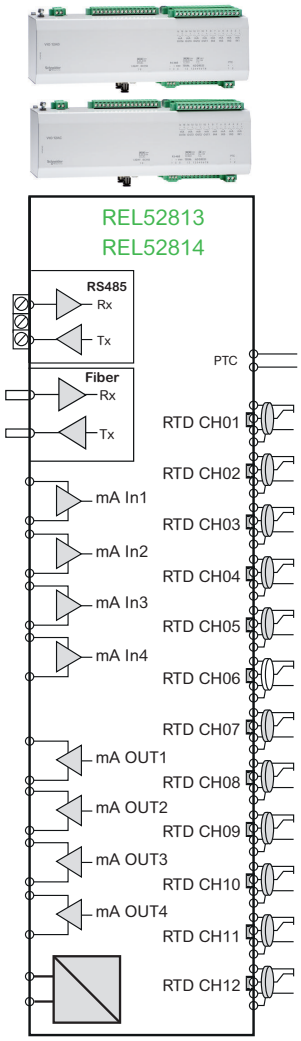

Life Is On Schneider Electric

Temperature and Analog Input/Output Modules

For PowerLogic™ P3

Temperature input modules – REL52811/REL52812/REL52813/REL52814				
Characteristics	**REL52811**	**REL52812**	**REL52813**	**REL52814**
Interface	Glass fiber (ST)	RS485 Twisted Pair	Glass fiber (ST) OR RS485, TP	
Distance (maximum)	2,000 m (78,740 in)	1,200 m* (47,244 in)	2 000 m/1 200 m*	
Quantity of Temperature sensors	12 channels, 3-wire		12 channels, 3-wire and 1 PTC channel 2-wire	
Supported RTD types	Pt100, Ni00, Ni120 and Cu10			
Measuring range	1...400 Ohm			
Measuring resolution	0.10 Ohm			
Measuring accuracy	±0.3 Ohm			
Sensor distance	50 Ohm (corresponds to 2 000 m at 0.75 mm^2)			
Power Supply	24...230 Vac/dc 50/60 Hz		24 Vdc	48...230 Vac/dc 50/60 Hz
Operating Temperature	0 °C (32 °F)...55 °C (131 °F)			
Mounting Type	DIN Rail			
Degree of protection	IP20			

* The value may decrease according to the conditions of use

Analog Input/Output modules–REL52811/REL52812/REL52813/REL52814				
Characteristics	**REL52811**	**REL52812**	**REL52813**	**REL52814**
Analog Input (mA)	0	0	4	4
Input Range	-	-	0...25 mA	0...25 mA
Input accuracy	-	-	±1%	±1%
Input resolution	-	-	6uA (12-bits)	6uA (12-bits)
Input impedance	-	-	100 Ohm	100 Ohm
Analog Output (mA)	0	0	4	4
Output range	-	-	0...25 mA	0...25 mA
Output accuracy	-	-	±1%	±1%
Output resolution	-	-	6uA (12-bits)	6uA (12-bits)
Galvanic isolation	-	-	1000 V	1000 V
Max. Load/output	-	-	750 Ohm	750 Ohm
PTC Input	-	-	1	1
Measuring accuracy	-	-	±10% (<10 kohm)	±10% (<10 kohm)

* The value may decrease according to the conditions of use

LPVT & LPCT Option

For PowerLogic™ P3 and Accessories

LPCT/LPVT Option in PowerLogic™ P3

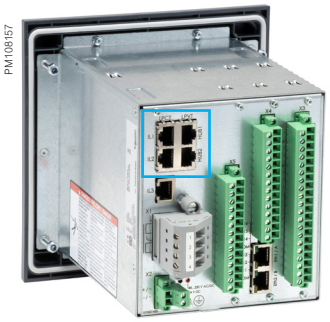

PowerLogic P3 Standard

PowerLogic P3 Advanced

LPCT inputs	
Nominal current	2.5 A...20 kA
Rated frequency	50 Hz or 60 Hz
LPCT rated nominal current	25, 50, 80, 100 A
LPCT rated primary current	10 A...5 kA
LPCT rated secondary current	22.5 mV
Current factor	0.25; 0.50; 1.00; 1.25; 1.33; 2.00; 2.50; 3.20; 4.00; 5.00; 6.30; 6.66; 10; 16; 20; 25; 31.5
Dynamic	45 x nominal current
Protection nominal current	51...1600 A
Input impedance	2 MOhms/500 pF
Thermal withstand	60 V

LPVT inputs	
Nominal voltage	50 V...500 kV
Rated frequency	50 Hz or 60 Hz
LPVT rated primary voltage	50 V...500 kV
LPVT rated secondary voltage	3.25 V/√3
Voltage factor	0.25–1.5
Rated voltage	3.25 V/√3
Extender rated voltage	10 MOhms/15 pF
Input impedance	0.25–1.5 rated voltage
Thermal withstand	25 V

Life Is On Schneider Electric

LPVT & LPCT Option

For PowerLogic™ P3 and Accessories

LPVT Hub Connector

PM106130

EMS59573: LPVT hub connector

The LPVT hub connector is a simple passive device that combines three LPVT signals coming from 3 different connectors into one single RJ45 connections.

The output of the LPVT hub connector is directly connected to the LPVT input of the PowerLogic P3 protection relay.

This accessory is indispensable when connecting PowerLogic P3 Protection relays to LPVTs.

Characteristics

Input voltage	<10 V
Input voltage limits	<30 V
Network frequency	50/60 Hz
Electrical connection	output: RJ45 connector
	inputs: 3 x RJ45 connectors
Dimension (L x W x H)	95 x 40 x 40 mm (3.74 x 1.57 x 1.57 in)
Weight	0.25 kg (0.55 lb)
Mounting support	DIN Rail
Operating altitude	≤3000 m (1.86 miles)

Voltage Adapter

PM106126

EMS59572: Voltage adapter(1)

The voltage transformer adapter is made with 4 resistor bridges used to interface conventional voltage transformers (VTs) with the PowerLogic P3 protection relay equipped for LPCT/LPVT sensors.

Characteristics

Input voltage	50...200 Vac (line-to-line)
Voltage max	600 V max permanent
Network frequency	50/60 Hz
Weight	0.15 kg (0.33 lb)
Mounting support	Symmetrical DIN Rail

(1) Contact us for availability

LPVT & LPCT Option

For PowerLogic™ P3 and Accessories

LPVT transducer

P7M12025: LPVT transducer

The LPVT Transducer allows an accurate transmission of the low voltage output signal from LPVT sensors (3.25/√3 V) across up to ten PowerLogic P3 protection relays equipped with LPVT measuring inputs. The low voltage input is provided through a single RJ45 connector that brings the 3 phase LPVT signals merged by LPVT hub connector EMS59573. P7M12025 can be installed on DIN rails complying with EN/IEC 60715.

The connections between all the elements are done with RJ45 wires that can be ordered with commercial references: 59660 (0.6 m) 59661 (2 m), 59662 (4 m). The branching between LPVT bus and each PowerLogic P3 protection relay is done with a 3-way RJ45 junction box (T-box) REL51095.

Characteristics

Nominal voltage input/output	1.876 V (3.25/√3 V)/1.876 V (3.25/√3 V)
Voltage factor	1.2 nominal voltage continously
	1.9 nominal voltage for 8 hours
Accuracy	Measurement class 0.5
	Protection class 3P
	Input burden 10 MΩ // 2.2 pF
	For -5...+40 °C
Power supply	24...48 Vdc, 125 Vdc or 120 Vac
Operating temperature	-25...+70 °C
Dimensions (L x W x H)	160 x 60 x 90 mm (6.30 x 2.36 x 3.54 in)

LPIT Test Box

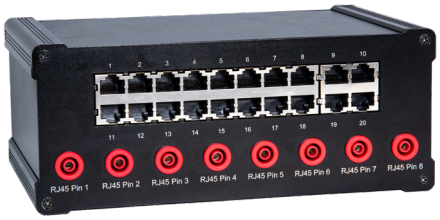

REL51037: LPIT test box*

This LPIT Test Box is an adapter for secondary testing of PowerLogic P3 protection relays with LPCT/LPVT measuring inputs. It's an interface between Omicron testing kit's low-power outputs and PowerLogic P3 inputs. Thanks to this adapter the testing is comfortable and the right accuracy in the entire measuring range is ensured. For the LPCT signal testing the LPIT Test Box offers 4 sets of current and 2 sets of voltage outputs depending on the measuring ranges tested.

The LPIT test box is delivered with all cables required to perform the tests.

Characteristics

Nominal LPCT voltage input/ output	1 V/22.5 mV, 2 V/22.5 mV, 2 V/225 mV and strait
Nominal LPVT voltage input/ output	1.876 V (3.25/√3 V)/1.876 V (3.25/√3 V)
LPCT testing ranges	0.35 to 3.50 pu
	0.70 to 7.00 pu
	3.50 to 35.00 pu
Accuracy	Typically 0.2%
Operating temperature	0...+50 °C
Dimensions (L x W x H)	208 x 124 x 85 mm (8.19 x 4.88 x 3.35 in)

**Please contact Schneider Electric for availability.*

Life Is On Schneider Electric

LPVT & LPCT Option

For PowerLogic™ P3 and Accessories

LPCT Test Socket and Plug

REL51089: LPCT Test Socket Essailec® (incl. cover)*

REL51090: LPCT Test Plug Essailec®*

The LPCT test sockets and plugs Essailec® from TE Connectivity allow to test PowerLogic P3 protection relay with LPCT measuring inputs in a comfortable way, profiting from RJ45 cable connections. The test procedure is exactly the same as for protection relays with conventional CT measuring inputs. The test socket is installed on the front panel of medium voltage switchgear interconnecting the LPCTs and PowerLogic P3 protection relay. When the test plug is connected, the current circut opens and allows to inject the signals from testing kit.

The quality of signals in protected by screened cover and casing. Grounding connection of socket casing is provided. The soluton is designed to limit human mistakes related to mixing of current and voltage circuits.

The LPCT Test Socket is delivered with a cover. LPCT test plug is required to perform secondary testing using a test socket that in installed in the medium voltage cubicle.

**Please contact Schneider Electric for availability.*

LPVT Test Socket and Plug

REL51092: LPVT Test Socket Essailec® (incl. cover)*

REL51093: LPVT Test Plug Essailec®*

The LPVT test sockets and plugs Essailec® from TE Connectivity allow to test PowerLogic P3 protection relay with LPVT measuring inputs in a comfortable way, profiting from RJ45 cables connections. The test procedure is exactly the same as for protection relays with conventional VT measuring inputs. The test socket is installed on the front panel of medium voltage switchgear interconnecting the LPVTs and PowerLogic P3 protection relay. When the test plug is connected, the voltage circuit opens and allows to inject the signals from testing kit.

The quality of signals in protected by screened cover and casing. Grounding connection of socket casing is provided. The soluton is designed to limit human mistakes related to mixing of current and voltage circuits.

The LPVT Test Socket is delivered with a cover. LPVT test plug is required to perform secondary testing using a test socket that in installed in the medium voltage cubicle.

Characteristics

Casing	Polycarbonate UL94 V0
Conductive elements	Silver coating
Connection type	RJ45 (Cat.5)
Nominal voltage	125 V
Maximum voltage	1000 V
Pollution degree	3
Nominal current	1.5 A
Accuracy	0.5 A
Operating temparature	-40...+85°C
IP degree (without cover/with cover)	IP20/IP40

**Please contact Schneider Electric for availability.*

LPVT & LPCT Option

For PowerLogic™ P3 and Accessories

DE88206

CSH120, CSH200 and CSH300 core balance CTs.

CSH core-balance current transformers

The CSH120, CSH200 and CSH300 core balance CTs are especially designed for direct residual or earth/ground fault current measurement. The only difference between them is the diameter.

Core balance CT	59635: CSH120	59636: CSH200	59637: CSH300
Inner diameter	120 mm (4.72 in)	196 mm (7.72 in)	291 mm (11.46 in)
Weight	0.6 kg (1.32 lb)	1.4 kg (3.09 lb)	2.5 kg (5.51 lb)
Transformation ratio	1/470		
Maximum permissible current	20 kA - 1 s		

Dimensions

DE88396

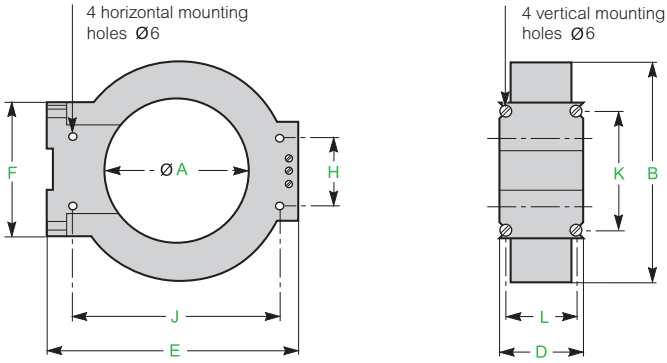

	59635: CSH120		59636: CSH200		59637: CSH300	
	mm	in.	mm	in.	mm	in.
A	120	4.72	196	7.72	291	11.46
B	164	6.46	256	10.1	360	14.17
D	44	1.73	46	1.81	46	1.81
E	190	7.48	274	10.8	390	15.35
F	80	3.15	120	4.72	120	4.72
H	40	1.57	60	2.36	60	2.36
J	166	6.54	254	10	369	14.53
K	65	2.56	104	4.09	104	4.09
L	35	1.38	37	1.46	37	1.46

Life Is On Schneider Electric

Arc Flash Sensors

For PowerLogic™ P3 Advanced only

Sensors Description

The sensor is used by an arc flash protection device (PowerLogic P3 Advanced) or system to detect the light coming from the arc flash incident.

The PowerLogic P3 Advanced arc sensor is activated by strong light. The sensor transforms the light information into the current signal, which is used by the protection device to indicate arc flash.

Arc flash sensors

Commercial references/ Characteristics	REL52801	REL52802	REL52803	REL52804	REL52805	REL52806	REL52839	REL52840	REL52807	REL52808	REL52809	REL52810
Type	**Standard**								**Pipe**			
VID	VA1DA-20	VA1DA-20S-HF	VA1DA-20S	VA1DA-6	VA1DA-6S-HF	VA1DA-6S	VA1DA-6W	VA1DA-20W	VA1EH-20	VA1EH-20S	VA1EH-6	VA1EH-6S
Weight	1,000 g 2.20 lb	1,300 g 2.87 lb	1,300 g 2.87 lb	300 g 0.66 lb	400 g 0.88 lb	400 g 0.88 lb			1,000 g 2.20 lb	1,300 g 2.87 lb	300 g 0.66 lb	400 g 0.88 lb
Cable length (m)	20	20	20	6	6	6	6	20	20	20	6	6
Shielded cable	-	●	●	-	●	●	●	●	-	●	-	●
Halogen free	-	●	-	-	●	-	-	-	-	-	-	-
Shield earthing		device end	device end		device end	device end	sensor end	sensor end		device end		device end
Environment	Pollution Degree 2											
Operation temperature	-25 °C (-13 °F)...+70 °C (+158 °F)											
Light spectrum sensitive area	400...1100 nm											
Detection time	1 ms											
Light sensitivity	8 000...10000 lux											
Loop supervision	Yes											

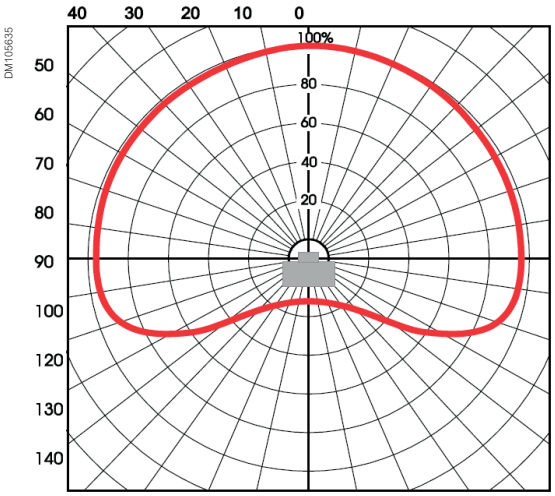

Sensitivity area

REL52801-52806 dimensions

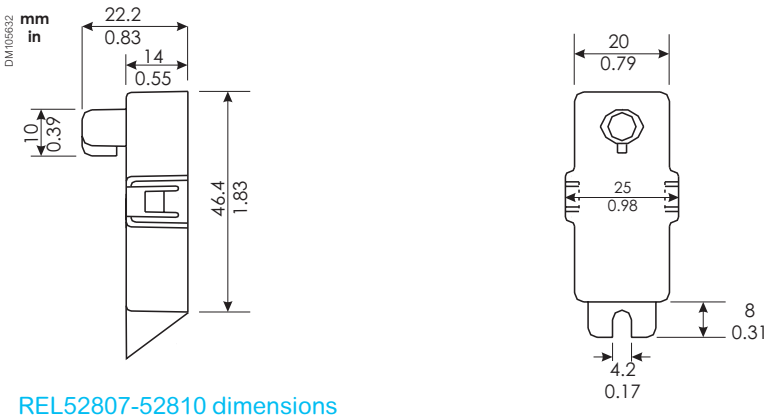

REL52807-52810 dimensions

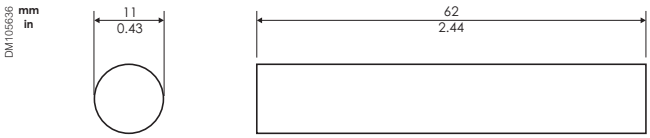

Arc Flash sensor: Pipe type

Arc Flash Sensors

For PowerLogic™ P3 Advanced only

Direct Mounting on Switchgear

Setting the light sensor in the switchgear requires either special supports type REL52828 (mounting plate for sensor Z-shape) or REL52829 (mounting plate for sensor L-shape), or it can be mounted in customer drilled holes.

PM109871

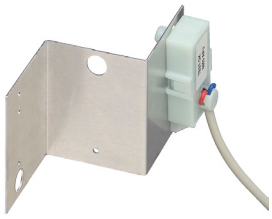

PM109872

Before

DM105633

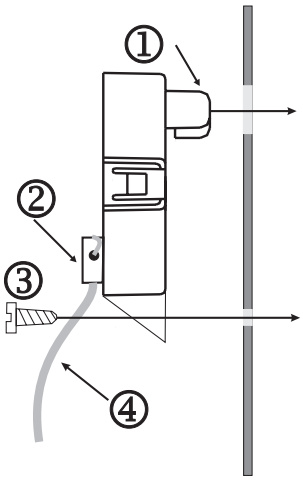

After

DM105634

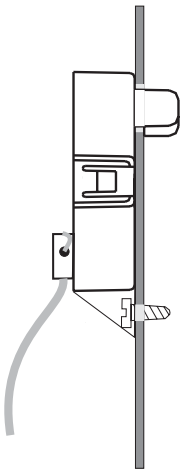

Mounting Options

REL52829 dimensions

DM105637

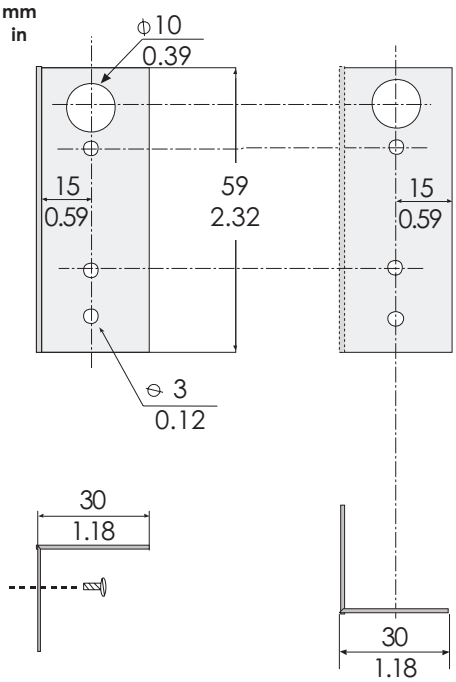

Mounting plate for sensor L-shape

REL52828 dimensions

DM105637

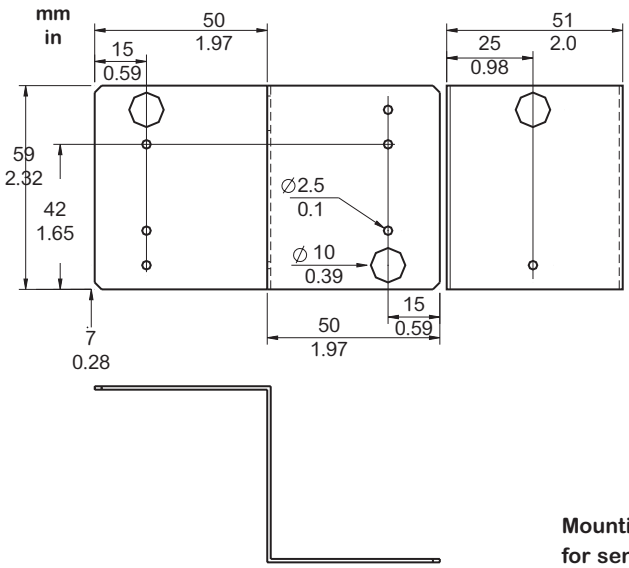

Mounting plate for sensor Z-shape

Life Is On Schneider Electric

Other Accessories

For PowerLogic™ P3

Wall Mounted Adapter

REL52836: P3UWAF Wall mounted adapter

The P3UWAF wall assembly frame, REL52836, enables mounting P3Ux models on the wall. By removing one of the hinge bolts, the frame can be turned 90 degrees for easier access to connections.

PM108142

P3UWAF Wall mounted adapter

PM108143

P3UWAF Wall mounted adapter + PowerLogic™ P3Ux

REL52842:P3XPAF Wall mounted adapter

The P3XWAF wall assembly frame, REL52842, enables mounting P3x3x and V321 models on the wall. By removing one of the hinge bolts, the frame can be turned 90 degrees for easier access to connections.

PB124827

P3XPAF Wall mounted adapter

PB124828

P3XPAF Wall mounted adapter + PowerLogic™ P3x3x

Other Accessories

For PowerLogic™ P3

Arc Flash Cables

PM108158

Arc Flash cable

REL52839 and REL52840: Arc Flash cables

The VA1DA-6W (REL52839) and VA1DA-20W (REL52840) sensors have shield grounding termination at the sensor end.

Panel Seal Cover

REL52833

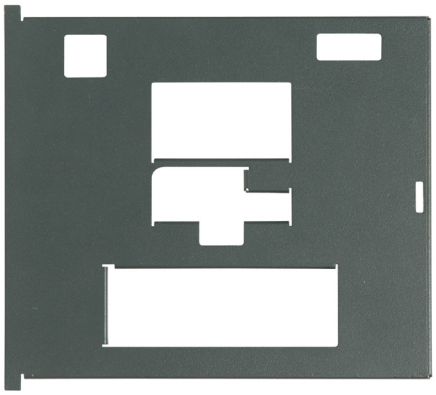

P3UPSC Panel seal cover

REL52833: P3UPSC Panel seal cover

The P3UPSC panel seal cover, REL52833, enables using a mechanical seal or lock to prevent unwanted operation of the device. With the seal cover, only the “User” user account can be used. The cover disables the front USB interface as well.

Accessories Components Cover

PB124827

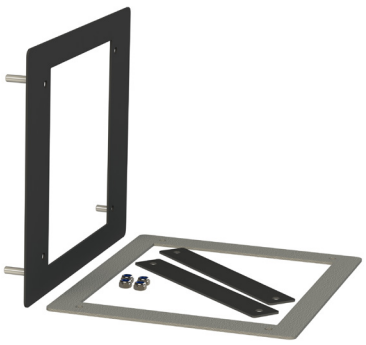

Accessories Components Cover

REL52837: P3UPAV200 Adapter plate

REL52844: P3UPAVS40 Adapter plate

The REL52844 adapter plate is specifically designed for installing a P3Ux relay in the cut-out of Vamp 200 series relays.

Similarly, the REL52837 adapter plate can be used to install a P3U relay in the cut-out of Sepam 20/40 series. This adapter plate consists of adapter plate, rubber seal, support plates and nuts.

Life Is On Schneider Electric

Notes

Schneider Electric Service

Schneider Electric Service

Greater Peace of Mind Throughout your Installation Lifecycle	110
Product Warranty	111
Achieve Higher Sustainability with ECOFIT™ Solutions	112
Environmental Information with Green Premium™ Ecolabel	113

Greater peace of Mind Throughout your Installation Lifecycle

How can you cut costs and improve performance at the same time?

When it comes to your electrical distribution infrastructure, the answer is straightforward: get professional expertise.

Life cycle services

DM408843

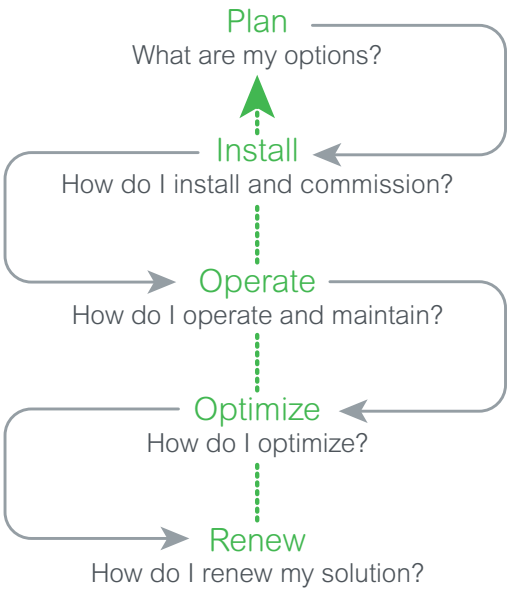

When it comes to your electrical distribution installation, we can help you:

- Increase productivity, reliability and safety
- Mitigate risk and limit downtime
- Keep equipment up to date and extend lifespan
- Cut cost and increase savings
- Improve your return on investment

CONTACT US!

https://www.se.com/in/en/work/services/

Plan

Schneider Electric helps you plan the full design and execution of your solution, looking at how to make your process more dependable and optimize time:

- **Technical feasibility studies:** Design solution in your environment
- **Preliminary design:** Accelerate turnaround time to reach a final solution design.

Install

Schneider Electric will help you to install more efficient, more reliable, and safer solutions based on your plans.

- **Project management:** Complete your projects on time and within budget
- **Commissioning:** Ensure your actual performance versus design, through on-site testing and commissioning, and tools and procedures.

Operate

Schneider Electric helps you maximize your installation uptime and control your capital expenditures through its services offering.

- **Asset operation solutions:** Provide the information you need to increase safety, enhance installation performance, and optimize asset maintenance and investment
- **Advantage service plans:** Customize service plans that include preventive, predictive and corrective maintenance
- **On-site maintenance services:** Deliver extensive knowledge and experience in electrical distribution maintenance
- **Spare parts management:** Ensures spare parts availability and optimized maintenance budget of your spare parts
- **Technical training:** Builds necessary skills and competencies to properly and safety operate your installations.

Optimize

Schneider Electric proposes recommendations for improved safety, availability, reliability and quality.

- **MP4 electrical assessment:** Define an improvement and risk management program.

Renew

Schneider Electric's end-of-life solutions may extend the life of your system while providing upgrades. Under specific service agreements, our service team can take full responsibility for the end-of-life processing of old electrical equipment:

- **Retrofit:** Keep up to date and improve the performance of electrical installations
- **MV product end-of-life:** Recycle and recover outdated equipment with end-of-life services.

Product Warranty

DM107178

Product Warranty

Standard Warranty for this offer is 2 years. However, this warranty period may be feasible to be extended in certain geographies. Please check with your local Schneider Electric representative for extended warranty availability and specific conditions.

Achieve Higher Sustainability with ECOFIT™ Solutions

Modernizing and upgrading your medium voltage switchgear doesn't need to mean your existing infrastructure is destructed.

Schneider Electric retrofit solutions, combined with proper switchgear maintenance helps you to improve the reliability of your installation while achieving higher sustainable performance with ECOFIT™-a Green Premium™ service.

ECOFIT™ for your MV Switchboard

- Extend your switchgears lifetime
- Access asset and energy management with digitization
- Reduce your environmental impact
- Enhance your process dependability
- Optimize your maintenance service costs and limit your investment
- New ECOFIT™ spare parts availability.

A true extended lifetime with ECOFIT™

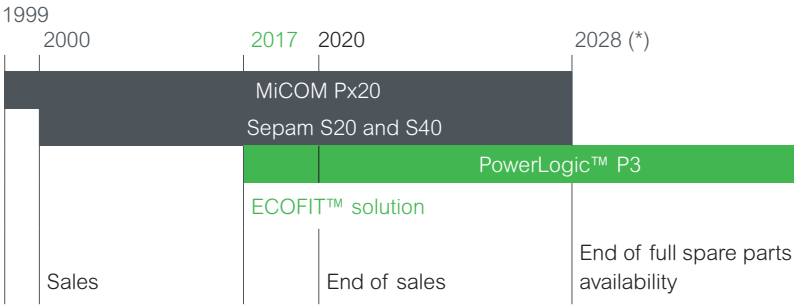

(*) Please consult Schneider electric

ECOFIT™ offers:

	Sepam S20	Sepam S40	MiCOM Px20	PowerLogic™ P3
Case	Flush mounting	Flush mounting	Flush mounting	Flush mounting
Installation	Fix	Fix	Withdrawable case	All terminals pluggable in PowerLogic P3 Standard DI, DO and V terminals pluggable in PowerLogic P3 Advanced
Language	Multilanguage	Multilanguage	Multilanguage	Multilanguage
Communication	IEC 60870-5-103 DNP3 Modbus serial	IEC 61850 Station bus IEC 60870-5-103 DNP3 Modbus serial Modbus Ethernet	Modbus serial Kbus Courier IEC60870-5-103 DNP3	IEC 61850 Ed.1 & Ed.2 IEC 60870-5-103 & 101 IEC 60870-5-101 Ethernet DNP3 Ethernet and Serial Modbus Ethernet and Serial EtherNet/IP SPA, Profibus
Power supply	24...250 Vdc 48...240 Vac	24...250 Vdc 48...240 Vac	24...250 Vdc 48...240 Vac	24...57 Vdc 80...265 Vdc/ac
Control LED	11 LEDs	11 LEDs	8 LEDs	P3 Standard: 12 LEDs P3 Advanced: 18 LEDs
Cyber security	No	No	No	Numerical password, 32 digits
Arc-flash	No	No	No	P3 Advanced: 1, 2, 4, 5 or 6 sensors
Back up memory	No	No	No	No
Compatibility with	P3 Standard: S20/S24/T20/T24/B21/B22/M20	P3 Standard/Advanced: S40/S41/S42/S43/S44/T40/T42/M40/M41/G40	P3 Standard: P120/P121/P122/P123/P921/P922/P923/P721/P723/P920 P3 Standard/Advanced: P126/P127/P225/P521/P220/P125	

Life Is On Schneider Electric

Environmental Information with Green Premium™ Ecolabel

An industry leading portfolio of offers delivering sustainable value

Green Premium™

More than 75% of our product sales offer superior transparency on the material content, regulatory information and environmental impact of our products:

- RoHS compliance
- REACh substance information
- Industry leading # of PEP's*
- Circularity instructions

Discover what we mean by green
Check your products!

The Green Premium program stands for our commitment to deliver customer valued sustainable performance. It has been upgraded with recognized environmental claims and extended to cover all offers including Products, Services and Solutions.

CO_2 and P&L impact through… Resource Performance

Green Premium brings improved resource efficiency throughout an asset's lifecycle. This includes efficient use of energy and natural resources, along with the minimization of CO_2 emissions.

Cost of ownership optimization through… Circular Performance

We're helping our customers optimize the total cost of ownership of their assets. To do this, we provide IoT-enabled solutions, as well as upgrade, repair, retrofit, and remanufacture services.

Peace of mind through… Well-being Performance

Green Premium products are RoHS and REACh compliant. We're going beyond regulatory compliance with step-by-step substitution of certain materials and substances from our products.

Improved sales through… Differentiation

Green Premium delivers strong value propositions through third-party labels and services. By collaborating with third-party organizations we can support our customers in meeting their sustainability goals such as green building certifications.

*PEP: Product Environmental Profile (i.e. Environmental Product Declaration)

Ordering

Ordering

Fast Ordering Code	116
PowerLogic™ P3 Standard	119
PowerLogic™ P3U20 configuration	119
PowerLogic™ P3U30 configuration	120
PowerLogic™ P3 Advanced	121
PowerLogic™ P3F30 configuration	121
PowerLogic™ P3L30 configuration	122
PowerLogic™ P3M30 configuration	123
PowerLogic™ P3M32 configuration	124
PowerLogic™ P3T32 configuration	125
PowerLogic™ P3G30 configuration	126
PowerLogic™ P3G32 configuration	127
Accessories	128
Tools	130

Fast Ordering Code

PowerLogic™ P3 Standard

PowerLogic™ P3 Standard

Commercial Ref.	Product reference	Power Supply	Nominal DI threshold voltage	Voltage inputs	Current inputs	Nbr. Digital Input/Output	CT connector	Comm. Port
REL52001	P3U30-5AAA3BCAA	Power A 48...230 V	220 Vdc/ac	4 VT	4 CT	16 DI/8 DO	Clamp	2 x RJ45
REL52002	P3U30-5AAA3BBAA	Power A 48...230 V	220 Vdc/ac	4 VT	4 CT	16 DI/8 DO	Clamp	RS485
REL52003	P3U30-5AAA1BCAA	Power A 48...230 V	24 Vdc/ac	4 VT	4 CT	16 DI/8 DO	Clamp	2 x RJ45
REL52004	P3U30-5AAA2BCAA	Power A 48...230 V	110 Vac/dc	4 VT	4 CT	16 DI/8 DO	Clamp	2 x RJ45
REL52005	P3U30-5AAA1BBAA	Power A 48...230 V	24 Vdc/ac	4 VT	4 CT	16 DI/8 DO	Clamp	RS485
REL52006	P3U30-5ABA1BBAA	Power B 24...48 V	24 Vdc/ac	4 VT	4 CT	16 DI/8 DO	Clamp	RS485
REL52007	P3U30-5AAA1BDAA	Power A 48...230 V	24 Vdc/ac	4 VT	4 CT	16 DI/8 DO	Clamp	2 x LC
REL52008	P3U30-6AAA2BCAA	Power A 48...230 V	110 Vdc/ac	4 VT	4 CT	16 DI/8 DO	Ring-lug	2 x RJ45
REL52009	P3U30-5ABA1BCAA	Power B 24...48 V	24 Vdc/ac	4 VT	4 CT	16 DI/8 DO	Clamp	2 x RJ45
REL52010	P3U30-5AAA2BDAA	Power A 48...230 V	110 Vdc/ac	4 VT	4 CT	16 DI/8 DO	Clamp	2 x LC
REL52011	P3U20-5ABA1ACAA	Power B 24...48 V	24 Vdc/ac	1 VT	4 CT	10 DI/5 DO	Clamp	2 x RJ45
REL52012	P3U30-5AAA2BBAA	Power A 48...230 V	110 Vdc/ac	4 VT	4 CT	16 DI/8 DO	Clamp	RS485
REL52013	P3U20-5AAA1ACAA	Power A 48...230 V	24 Vdc/ac	1 VT	4 CT	10 DI/5 DO	Clamp	2 x RJ45
REL52014	P3U30-5ABA1BDAA	Power B 24...48 V	24 Vdc/ac	4 VT	4 CT	16 DI/8 DO	Clamp	2 x LC
REL52015	P3U20-6AAA2ACAA	Power A 48...230 V	110 Vdc/ac	1 VT	4 CT	10 DI/5 DO	Ring-lug	2 x RJ45
REL52016	P3U30-6AAA2BBAA	Power A 48...230 V	110 Vdc/ac	4 VT	4 CT	16 DI/8 DO	Ring-lug	RS485
REL52017	P3U30-6AAA3BCAA	Power A 48...230 V	220 Vdc/ac	4 VT	4 CT	16 DI/8 DO	Ring-lug	2 x RJ45
REL52018	P3U20-5AAA2ACAA	Power A 48...230 V	110 Vdc/ac	1 VT	4 CT	10 DI/5 DO	Clamp	2 x RJ45
REL52019	P3U30-5AAA1BFAA	Power A 48...230 V	24 Vdc/ac	4 VT	4 CT	16 DI/8 DO	Clamp	LC + RS232
REL52020	P3U30-6ABA1BBAA	Power B 24...48 V	24 Vdc/ac	4 VT	4 CT	16 DI/8 DO	Ring-lug	RS485
REL52021	P3U30-6AAA2BDAA	Power A 48...230 V	110 Vdc/ac	4 VT	4 CT	16 DI/8 DO	Ring-lug	2 x LC
REL52022	P3U30-6AAA1BCAA	Power A 48...230 V	24 Vdc/ac	4 VT	4 CT	16 DI/8 DO	Ring-lug	2 x RJ45
REL52025	P3U30-5BAA2BCAA	Power A 48...230 V	110 Vdc/ac	4 VT	4 CT	16 DI/8 DO	Clamp	2 x RJ45
REL52032	P3U20-5AAA1ABAA	Power A 48...230 V	24 Vdc/ac	1 VT	4 CT	10 DI/5 DO	Clamp	RS485
REL52033	P3U20-5AAA1ADAA	Power A 48...230 V	24 Vdc/ac	1 VT	4 CT	10 DI/5 DO	Clamp	2 x LC
REL52034	P3U20-6AAA1ABAA	Power A 48...230 V	24 Vdc/ac	1 VT	4 CT	10 DI/5 DO	Ring-lug	RS485
REL52035	P3U20-6AAA1ACAA	Power A 48...230 V	24 Vdc/ac	1 VT	4 CT	10 DI/5 DO	Ring-lug	2 x RJ45
REL52036	P3U20-6AAA1ADAA	Power A 48...230 V	24 Vdc/ac	1 VT	4 CT	10 DI/5 DO	Ring-lug	2 x LC
REL52037	P3U20-5AAA2ABAA	Power A 48...230 V	110 Vdc/ac	1 VT	4 CT	10 DI/5 DO	Clamp	RS485
REL52038	P3U20-5AAA2ADAA	Power A 48...230 V	110 Vdc/ac	1 VT	4 CT	10 DI/5 DO	Clamp	2 x LC
REL52039	P3U20-6AAA2ABAA	Power A 48...230 V	110 Vdc/ac	1 VT	4 CT	10 DI/5 DO	Ring-lug	RS485
REL52040	P3U20-6AAA2ADAA	Power A 48...230 V	110 Vdc/ac	1 VT	4 CT	10 DI/5 DO	Ring-lug	2 x LC
REL52041	P3U20-5AAA3ABAA	Power A 48...230 V	220 Vdc/ac	1 VT	4 CT	10 DI/5 DO	Clamp	RS485
REL52042	P3U20-5AAA3ACAA	Power A 48...230 V	220 Vdc/ac	1 VT	4 CT	10 DI/5 DO	Clamp	2 x RJ45
REL52044	P3U20-6AAA3ABAA	Power A 48...230 V	220 Vdc/ac	1 VT	4 CT	10 DI/5 DO	Ring-lug	RS485
REL52045	P3U20-6AAA3ACAA	Power A 48...230 V	220 Vdc/ac	1 VT	4 CT	10 DI/5 DO	Ring-lug	2 x RJ45
REL52047	P3U30-6AAA1BBAA	Power A 48...230 V	24 Vdc/ac	4 VT	4 CT	16 DI/8 DO	Ring-lug	RS485
REL52048	P3U30-6AAA1BDAA	Power A 48...230 V	24 Vdc/ac	4 VT	4 CT	16 DI/8 DO	Ring-lug	2 x LC
REL52049	P3U30-5AAA3BDAA	Power A 48...230 V	220 Vdc/ac	4 VT	4 CT	16 DI/8 DO	Clamp	2 x LC
REL52050	P3U30-6AAA3BBAA	Power A 48...230 V	220 Vdc/ac	4 VT	4 CT	16 DI/8 DO	Ring-lug	RS485

Life Is On Schneider Electric

Fast Ordering Code

PowerLogic™ P3 Standard

PowerLogic™ P3 Standard

Commercial Ref.	Product reference	Power Supply	Nominal DI threshold voltage	Voltage inputs	Current inputs	Nbr. Digital Input/Output	CT connector	Comm. Port
REL52051	P3U30-6AAA3BDAA	Power A 48...230 V	220 Vdc/ac	4 VT	4 CT	16 DI/8 DO	Ring-lug	2 x LC
REL52073	P3U30-7AAA1CDAA	Power A 48...230 V	24 Vdc/ac	4 LPVT	3 LPCT, 1CT	16 DI/8 DO	LPCT: RJ45, Io: Clamp	2 x LC
REL52075	P3U30-7AAA2CCAA	Power A 48...230 V	110 Vdc/ac	4 LPVT	3 LPCT, 1CT	16 DI/8 DO	LPCT: RJ45, Io: Clamp	2 x RJ45
REL52077	P3U30-7AAA3CCAA	Power A 48...230 V	220 Vdc/ac	4 LPVT	3 LPCT, 1CT	16 DI/8 DO	LPCT: RJ45, Io: Clamp	2 x RJ45
REL52078	P3U30-7AAA1CBAA	Power A 48...230 V	24 Vdc/ac	4 LPVT	3 LPCT, 1CT	16 DI/8 DO	LPCT: RJ45, Io: Clamp	RS485
REL52093	P3U30-6CAA2BCAA	Power A 48...230 V	110 Vdc/ac	4 VT	4 CT	16 DI/8 DO	Ring-lug	2 x RJ45
REL52094	P3U30-6CAA1BBAA	Power A 48...230 V	24 Vdc/ac	4 VT	4 CT	16 DI/8 DO	Ring-lug	RS485
REL52095	P3U30-6CAA2BDAA	Power A 48...230 V	110 Vdc/ac	4 VT	4 CT	16 DI/8 DO	Ring-lug	2 x LC
REL52096	P3U30-5CAA1BCAA	Power A 48...230 V	24 Vdc/ac	4 VT	4 CT	16 DI/8 DO	Clamp	2 x RJ45
REL52097	P3U30-6CAA3BCAA	Power A 48...230V	220 Vdc/ac	4 VT	4 CT	16 DI/8 DO	Ring-lug	2 x RJ45
REL52201	P3U30-6ABA1BCAA	Power B 24...48 V	24 Vdc/ac	4 VT	4 CT	16 DI/8 DO	Ring-lug	2 x RJ45
REL52203	P3U20-6AAA2AHAA	Power A 48...230 V	110 Vdc/ac	1 VT	4 CT	8 DI/11 DO	Ring-lug	2 x RJ45
REL52210	P3U30-6ABA1BDAA	Power B 24...48 V	24 Vdc/ac	4 VT	4 CT	16 DI/8 DO	Ring-lug	2 x LC
REL53000	P3U30-6AAA1BCAB	Power A 48...230 V	24 Vdc/ac	4 VT	4CT	16DI/8DO	Ring-lug	2 x RJ45
REL53002	P3U30-6AAA2BEAB	Power A 48...230 V	110 V dc/ac	4 VT	4CT	16DI/8DO	Ring-lug	RJ45 + RS232
REL53003	P3U30-6AAA1BEAB	Power A 48...230 V	24 Vdc/ac	4 VT	4CT	16DI/8DO	Ring-lug	RJ45 + RS232
REL53090	P3U30-6ABA1BDAB	Power B 24...48 V	24 Vdc/ac	4 VT	4CT	16DI/8DO	Ring-lug	2 x LC
REL53091	P3U30-6ABA1BCAB	Power B 24...48 V	24 Vdc/ac	4 VT	4CT	16DI/8DO	Ring-lug	2 x RJ45
REL53092	P3U30-6ABA1BBAB	Power B 24...48 V	24 Vdc/ac	4 VT	4CT	16DI/8DO	Ring-lug	RS485
REL53102	P3U30-6AAA2BDAB	Power A 48...230 V	110 V dc/ac	4 VT	4CT	16DI/8DO	Ring-lug	2 x LC
REL53131	P3U30-6AAA2BHAB	Power A 48...230 V	110 V dc/ac	4 VT	4CT	14 DI/11DO	Ring-lug	2 x RJ45
REL53132	P3U30-6ABA1BHAB	Power B 24...48 V	24 Vdc/ac	4 VT	4CT	14 DI/11DO	Ring-lug	2 x RJ45
REL53144	P3U30-6AAA1BDAB	Power A 48...230 V	24 Vdc/ac	4 VT	4CT	16DI/8DO	Ring-lug	2 x LC
REL53152	P3U30-6AAA2BGAB	Power A 48...230 V	110 V dc/ac	4 VT	4CT	14 DI/11DO	Ring-lug	RS485
REL53154	P3U30-6ABA1BEAB	Power B 24...48 V	24 Vdc/ac	4 VT	4CT	16DI/8DO	Ring-lug	RJ45 + RS232
REL53155	P3U30-6ABA1BGAB	Power B 24...48 V	24 Vdc/ac	4 VT	4CT	14 DI/11DO	Ring-lug	RS485
REL53157	P3U20-6CAA3AHAA	Power A 48...230 V	220 V dc/ac	4 VT	4CT	14DI/11DO	Ring-lug	2 x RJ45
REL53158	P3U30-6CAA3BHAA	Power A 48...230 V	220 V dc/ac	4 VT	4CT	14DI/11DO	Ring-lug	2 x RJ45
REL53159	P3U30-8CAA3CCAA	Power A 48...230 V	220 V dc/ac	4 LPVT	3 LPCT, 1CT	16DI/8DO	LPCT: RJ45, Io: Ring-lug	2 x RJ45
REL53160	P3U30-6CAA2BHAA	Power A 48...230 V	110 V dc/ac	4 VT	4CT	14 DI/11DO	Ring-lug	2 x RJ45

For more configuration or options, please use our web configurator or see:

Page 119 for PowerLogic™ P3U20
Page 120 for PowerLogic™ P3U30

Go to web configurator

Fast Ordering Code

PowerLogic™ P3 Advanced

PowerLogic™ P3 Advanced

The PowerLogic P3 Advanced relay is a fully configurable product. Use the below links to go directly to concerned application pages.

Page 121 for PowerLogic™ P3F30

Page 122 for PowerLogic™ P3L30

Page 123 for PowerLogic™ P3M30

Page 124 for PowerLogic™ P3M32

Page 125 for PowerLogic™ P3T32

Page 126 for PowerLogic™ P3G30

Page 127 for PowerLogic™ P3G32

Alternatively configure the product using digital web configurator tool.

Go to web configurator

Life Is On Schneider Electric

PowerLogic™ P3 Standard

PowerLogic™ P3U20 Configuration

	U20	**Application**	
		U20	Feeder & Motor, 4xI, 1xU. 2DI, 5DO
X1		**Phase currents & voltage input, X1**	
		5	1 A/5 A & 1U (100/110 V), pluggable clamp connector
		6	1 A/5 A & 1U (100/110 V), pluggable ring lug connector
X1		**Earth-fault current input, X1**	
		A	1 A/5 A
		B	0,2 A/1 A
		C	2 A/20 A CSH
X2		**Nominal Supply Voltage [V], X2**	
		A	Power A 48...230 V (range: 40...265 Vac/dc)
		B	Power B 24...48 V (range: 18...60 Vdc) (1)
	A	**Future option**	
		A	None
		Nominal Digital Input voltage (voltage withstand)	
		1	24 Vac/dc (255 Vac/dc)
		2	110 Vac/dc (255 Vac/dc)
		3	220 Vac/dc (255 Vac/dc)
		4	24 Vac/dc for DI -DI2, 110 Vac/dc for DI3-DI16 (255 Vac/dc)
		5	24 Vac/dc for DI -DI2, 220 Vac/dc for DI3-DI16 (255 Vac/dc)
X5	A	**Voltage measurements + I/O, X5**	
		A	None
X4		**I/O with comms, X4**	
		B	RS-485 + 8DI
		C	2 x RJ-45 + 8DI
		D	2 x LC + 8DI
		E	RJ + 232 + 8DI with IRIG-B
		F	LC + 232 + 8DI with IRIG-B
		G	RS-485 + 6DI + 3DO
		H	2 x RJ-45 + 6DI + 3DO
		I	2 x LC + 6DI + 3DO
		Product version	
		A	Version 2.1, latest FW
		Region	
		A	English, IEC
		B	English, ANSI
		C	Chinese
		R	Russian

(1) Always check the power supply range from the relay's serial number sticker

1. Choose your option
2. Mark your choice in the box below
3. Check your **order code:**

PowerLogic P3	U20				A		A			
Slot numbers		X1	X1	X2			X5	X4		

PowerLogic™ P3 Standard

PowerLogic™ P3U30 Configuration

	U30	**Application**	
		U30 Feeder & Motor, 4xI, 4xU. 2DI, 5DO	
X1		**Phase currents & voltage input, X1**	
		5 1 A/5 A & 1U (100/110 V), pluggable clamp connector	X5 = B
		6 1 A/5 A & 1U (100/110 V), pluggable ring lug connector	X5 = B
		7 3 LPCT & 4 LPVT, Io clamp connector	X5 = C
		8 3 LPCT & 4 LPVT, Io ring-lug connector	X5 = C
X1		**Earth-fault current input, X1**	
		A 1 A/5 A	
		B 0,2 A/1 A	
		C 2 A/20 A CSH	
X2		**Nominal Supply Voltage [V], X2**	
		A Power A 48...230 V (range: 40...265 Vac/dc)	
		B Power B 24...48 V (range: 18...57 Vdc) (1)	
	A	**Future option**	
		A None	
		Nominal Digital Input voltage (voltage withstand)	
		1 24 Vac/dc (255 Vac/dc)	
		2 110 Vac/dc (255 Vac/dc)	
		3 220 Vac/dc (255 Vac/dc)	
		4 24 Vac/dc for DI -DI2, 110 Vac/dc for DI3-DI16 (255 Vac/dc)	
		5 24 Vac/dc for DI1-DI2, 220 Vac/dc for DI3-DI16 (255 Vac/dc)	
X5		**Voltage measurements + I/O, X5**	
		B 3U (100/110 V) + 6DI + 3DO	X1 = 5 or 6
		C 6 DI + 3 DO	X1 = 7 or 8
X4		**I/O with comms, X4**	
		B RS-485 + 8DI	
		C 2 x RJ-45 + 8DI	
		D 2 x LC + 8DI	
		E RJ + 232 + 8DI with IRIG-B	
		F LC + 232 + 8DI with IRIG-B	
		G RS-485 + 6DI + 3DO	X1 = 5 or 6
		H 2 x RJ-45 + 6DI + 3DO	X1 = 5 or 6
		I 2 x LC + 6DI + 3DO	X1 = 5 or 6
		Product version	
		A Version 2.1, latest FW	
		Region	
		A English, IEC	
		B English, ANSI	Slot X1 = 6
		C Chinese	
		R Russian	

(1) Always check the power supply range from the relay's serial number sticker

1. Choose your option
2. Mark your choice in the box below
3. Check your **order code:**

PowerLogic P3	U30				A					
Slot numbers		X1	X1	X2			X5	X4		

Life Is On Schneider Electric

PowerLogic™ P3 Advanced

PowerLogic™ P3F30 Configuration

	F30	**Application**		
		F30	Feeder protection relay	
1		**Nominal Supply Voltage [V]**		
		C	Power C 110...230 V (80...265 Vac/dc, 5 x DO heavy duty, A1, SF)	
		D	Power D 24...48 V (18...60 Vdc, 5 x DO heavy duty, A1, SF)	
2		**I/O Card I**		
		G	6DI+4DO (6 x DI, 4 x DO) or 6	Slot 3 = A, G, H or I
		B	3BIO+2Arc (3 x BI/BO, 2 x Arc point sensor, T2, T3, T4)	Slot 3 = A, G, H or I
		C	F2BIO+1Arc (Fibre 2 x BI/BO, 1 x Arc loop sensor, T2, T3, T4)	Slot 3 = A, G, H or I
3		**I/O Card II**		
		A	None	Slot 4 = A
		G	6DI+4DO (6 x DI, 4 x DO)	Slot 4 = A, G, H or I
		H	6DI+4DO (6 x DI, 4 x DO(NC))	Slot 4 = A, H or I
		I	10DI (10 x DI)	Slot 4 = A or I
4		**I/O Card III**		
		A	None	Slot 5 = A or D
		G	6DI+4DO (6 x DI, 4 x DO)	Slot 5 = A, G or I
		H	6DI+4DO (6 x DI, 4 x DO(NC))	Slot 5 = A, H or I
		I	10DI (10 x DI)	Slot 5 = A or I
5		**I/O Card IV**		
		A	None	
		D	2IGBT (2 x IGBT High speed outputs), excludes I/O Card III, slot 4	
		G	6DI+4DO (6 x DI, 4 x DO)	
		H	6DI+4DO (6 x DI, 4 x DO(NC))	
		I	10DI (10 x DI)	
6		**Option card I**		
		A	None	
		D	4Arc (4 x Arc sensor)	
		K	RS232, IRIG-B	
7	A	**Future option**		
		A	None	
8		**Analog measurement card (See application)**		
		E	3L(5/1A) + 2Io(5/1A+1/0,2A) + 4U	Region = A, C or R
		M	3LPCT + 2Io(5/1A+1/0,2A) + 4LPVT	Region = A, C or R
		N	3L(5/1A) + Io1(5/1A) + Io2CSH(2/20A) + 4U	Region = A, C or R
		P	3LPCT + Io1(5/1A) +Io2CSH(2/20A) + 4LPVT	Region = A, C or R
		1	3L(5/1A) + 2Io (5/1A+1/0,2A) ringlug + 4U	
		5	3L(5/1A) + Io1(5A) + Io2CSH(2/20A) RL + 4U	Region = A, C or R
9		**Communication interface I**		
		A	None	
		B	RS232 (RS232, IRIG-B)	
		C	RS232+RJ (RS232, IRIG-B + Ethernet RJ-45 100 Mbps)	
		D	RS232+LC (RS232, IRIG-B + Ethernet LC 100 Mbps)	
		E	2xRS485 (2-wire)	
		F	RS485+RJ (RS485 2-wire + Ethernet RJ-45 100 Mbps)	
		G	RS485+LC (RS485 2-wire + Ethernet LC 100 Mbps)	
		N	2xRJ (Ethernet RJ 100 Mbps, RSTP, PRP)	
		O	2xLC (Ethernet LC 100 Mbps, RSTP, PRP)	
		P	PP (Plastic/Plastic serial fibre)	
		R	GG (Glass/Glass serial fibre)	
10	A	**Reserved**		
		A	Reserved	
		Display type		
		B	128x128 (128 x 128 LCD matrix)	
		C	128x128Ext (128 x 128 LCD matrix, detachable) (1)	
		Nominal Digital Input voltage (voltage withstand)		
		A	24 Vdc/ac, (255 Vac/dc)	
		B	110 Vdc/ac, (255 Vac/dc)	
		C	220 Vdc/ac, (255 Vac/dc)	
	A	**Product version**		
		A	Version 2.1, latest FW	
	A	**Future option**		
		A	None	
		Region		
		A	English, IEC	
		B	English, ANSI	Slot 8 = 1 or 2
		C	Chinese	
		R	Russia	

(1) By default cable length is 2 m. In case other length is needed order separately VX001-1, Vx001-3 or VX001-5 for 1 m, 3 m and 5 m respectively.

1. Choose your option
2. Mark your choice in the box below
3. Check your **order code:**

PowerLogic P3	F30						-		A			A	-			A	A	
Slot numbers		1	2	3	4	5	-	6	7	8	9	10					

PowerLogic™ P3 Advanced

PowerLogic™ P3L30 Configuration

	L30	**Application**		
		L30	Feeder protection relay with Line differential protection	
1		**Nominal Supply Voltage [V]**		
		C	Power C 110...230 V (80...265 Vac/dc, 5 x DO heavy duty, A1, SF)	
		D	Power D 24...48 V (18...60 Vdc, 5 x DO heavy duty, A1, SF)	
2		**I/O Card I**		
		G	6DI+4DO (6 x DI, 4 x DO)	Slot 3 = A, G, H or I
		B	3BIO+2Arc (3 x BI/BO, 2 x Arc point sensor, T2, T3, T4)	Slot 3 = A, G, H or I
		C	F2BIO+1Arc (Fibre 2 x BI/BO, 1 x Arc loop sensor, T2, T3, T4)	Slot 3 = A, G, H or I
3		**I/O Card II**		
		A	None	Slot 4 = A
		G	6DI+4DO (6 x DI, 4 x DO)	Slot 4 = A, G, H or I
		H	6DI+4DO (6 x DI, 4 x DO(NC))	Slot 4 = A, H, or I
		I	10DI (10 x DI)	Slot 4 = A or I
4		**I/O Card III**		
		A	None	Slot 5 = A or D
		G	6DI+4DO (6 x DI, 4 x DO)	Slot 5 = A, G, H or I
		H	6DI+4DO (6 x DI, 4 x DO(NC))	Slot 5 = A, H or I
		I	10DI (10 x DI)	Slot 5 = A or I
5		**I/O Card IV**		
		A	None	
		D	2IGBT (2 x IGBT High speed outputs), excludes I/O Card III, slot 4	Slot 4 = A
		G	6DI+4DO (6 x DI, 4 x DO)	
		H	6DI+4DO (6 x DI, 4 x DO(NC))	
		I	10DI (10 x DI)	
6		**Option card I**		
		D	4Arc (4 x Arc sensor)	
		S	Line diff with integrated optical diff comms. card	
		T	Line diff with RS232 for external diff comms. converter	
7	A	**Future option**		
		A	None	
8		**Analog measurement card (See application)**		
		E	3L(5/1A) + 2Io(5/1A+1/0,2A) + 4U	Region = A, C or R
		N	3L(5/1A) + Io1(5/1A) + Io2CSH(2/20A) + 4U	Region = A, C or R
		1	3L(5/1A) + 2Io (5/1A+1/0,2A) ringlug + 4U	
		5	3L(5/1A) + Io1(5A) + Io2CSH(2/20A) RL + 4U	Region = A, C or R
9		**Communication interface I**		
		A	None	
		B	RS232 (RS232, IRIG-B)	
		C	RS232+RJ (RS232, IRIG-B + Ethernet RJ-45 100 Mbps)	
		D	RS232+LC (RS232, IRIG-B + Ethernet LC 100 Mbps)	
		E	2xRS485 (2-wire)	
		F	RS485+RJ (RS485 2-wire + Ethernet RJ-45 100 Mbps)	
		G	RS485+LC (RS485 2-wire + Ethernet LC 100 Mbps)	
		N	2xRJ (Ethernet RJ 100 Mbps, RSTP)	
		O	2xLC (Ethernet LC 100 Mbps, RSTP)	
		P	PP (Plastic/Plastic serial fibre)	
		R	GG (Glass/Glass serial fibre)	
10	A	**Reserved**		
		A	Reserved	
		Display type		
		B	128x128 (128 x 128 LCD matrix)	
		C	128x128Ext (128 x 128 LCD matrix, detachable) (1)	
		Nominal Digital Input voltage (voltage withstand)		
		A	24 Vdc/ac, (255 Vac/dc)	
		B	110 Vdc/ac, (255 Vac/dc)	
		C	220 Vdc/ac, (255 Vac/dc)	
	A	**Product version**		
		A	Version 2.1, latest FW	
	A	**Future option**		
		A	None	
		Region		
		A	English, IEC	
		B	English, ANSI	Slot B = 1 or 2
		C	Chinese	
		R	Russia	

(1) By default cable length is 2 m. In case other length is needed order separately VX001-1, VX001-3 or VX001-5 for 1 m, 3 m and 5 m respectively.

1. Choose your option
2. Mark your choice in the box below
3. Check your **order code:**

PowerLogic™ P3	L30						-		A			A	-			A	A	
Slot numbers		1	2	3	4	5	-	6	7	8	9	10					

Life Is On Schneider Electric

PowerLogic™ P3 Advanced

PowerLogic™ P3M30 Configuration

	M30	**Application**		
		M30	Motor protection relay	
1		**Nominal Supply Voltage [V]**		
		C	Power C 110...230 V (80...265 Vac/dc, 5 x DO heavy duty, A1, SF)	
		D	Power D 24...48 V (18...60 Vdc, 5 x DO heavy duty, A1, SF)	
2		**I/O Card I**		
		G	6DI+4DO (6 x DI, 4 x DO)	Slot 3 = A, G, H or I
		B	3BIO+2Arc (3 x BI/BO, 2 x Arc point sensor, T2, T3, T4)	Slot 3 = A, G, H or I
		C	F2BIO+1Arc (Fibre 2 x BI/BO, 1 x Arc loop sensor, T2, T3, T4)	Slot 3 = A, G, H or I
3		**I/O Card II**		
		A	None	Slot 4 = A
		G	6DI+4DO (6 x DI, 4 x DO)	Slot 4 = A, G, H, or I
		H	6DI+4DO (6 x DI, 4 x DO(NC))	Slot 4 = A, H or I
		I	10DI (10 x DI)	Slot 4 = A or I
4		**I/O Card III**		
		A	None	Slot 5 = A or D
		G	6DI+4DO (6 x DI, 4 x DO)	Slot 5 = A, G, H or I
		H	6DI+4DO (6 x DI, 4 x DO(NC))	Slot 5 = A, H or I
		I	10DI (10 x DI)	Slot 5 = A or I
5		**I/O Card IV**		
		A	None	
		D	2IGBT (2 x IGBT High speed outputs), excludes I/O Card III, slot 4	Slot 4 = A
		G	6DI+4DO (6 x DI, 4 x DO)	
		H	6DI+4DO (6 x DI, 4 x DO(NC))	
		I	10DI (10 x DI)	
6		**Option card I**		
		A	None	
		D	4Arc (4 x Arc sensor)	
		K	RS232, IRIG-B	
7	A	**Future option**		
		A	None	
8		**Analog measurement card (See application)**		
		E	3L(5/1A) + 2Io(5/1A+1/0,2A) + 4U	Region = A, C or R
		M	3LPCT + 2Io(5/1A+1/0,2A) + 4LPVT	Region = A, C or R
		N	3L(5/1A) + Io1(5/1A) + Io2CSH(2/20A) + 4U	Region = A, C or R
		P	3LPCT + Io1(5/1A) +Io2CSH(2/20A) + 4LPVT	Region = A, C or R
		1	3L(5/1A) + 2Io (5/1A+1/0,2A) ringlug + 4U	
		5	3L(5/1A) + Io1(5A) + Io2CSH(2/20A) RL + 4U	Region = A, C or R
9		**Communication interface I**		
		A	None	
		B	RS232 (RS232, IRIG-B)	
		C	RS232+RJ (RS232, IRIG-B + Ethernet RJ-45 100 Mbps)	
		D	RS232+LC (RS232, IRIG-B + Ethernet LC 100 Mbps)	
		E	2xRS485 (2-wire)	
		F	RS485+RJ (RS485 2-wire + Ethernet RJ-45 100 Mbps)	
		G	RS485+LC (RS485 2-wire + Ethernet LC 100 Mbps)	
		N	2xRJ (Ethernet RJ 100 Mbps, RSTP)	
		O	2xLC (Ethernet LC 100 Mbps, RSTP)	
		P	PP (Plastic/Plastic serial fibre)	
		R	GG (Glass/Glass serial fibre)	
10	A	**Reserved**		
		A	Reserved	
		Display type		
		B	128x128 (128 x 128 LCD matrix)	
		C	128x128Ext (128 x 128 LCD matrix, detachable) (1)	
		Nominal Digital Input voltage (voltage withstand)		
		A	24 Vdc/ac, (255 Vac/dc)	
		B	110 Vdc/ac, (255 Vac/dc)	
		C	220 Vdc/ac, (255 Vac/dc)	
	A	**Product version**		
		A	Version 2.1, latest FW	
	A	**Future option**		
		A	None	
		Region		
		A	English, IEC	
		B	English, ANSI	Slot 8 = 1 or 2
		C	Chinese	
		R	Russia	

(1) By default cable length is 2 m. In case other length is needed order separately VX001-1, VX001-3 or VX001-5 for 1 m, 3 m and 5 m respectively.

1. Choose your option
2. Mark your choice in the box below
3. Check your **order code:**

PowerLogic™ P3	M30						-		A			A	-			A	A	
Slot numbers		1	2	3	4	5	-	6	7	8	9	10						

PowerLogic™ P3 Advanced

PowerLogic™ P3M32 Configuration

	M32	**Application**		
		M32 Motor protection relay with differential protection		
1		**Nominal Supply Voltage [V]**		
		C Power C 110...230 V (80 .. 265 Vac/dc, 5 x DO heavy duty, A1, SF)		
		D Power D 24...48 V (18 .. 60 Vdc, 5 x DO heavy duty, A1, SF)		
2		**I/O Card I**		
		G 6DI+4DO (6 x DI, 4 x DO)	Slot 3 = A, G, H or I	
		B 3BIO+2Arc (3 x BI/BO, 2 x Arc point sensor, T2, T3, T4)	Slot 3 = A, G, H or I	
		C F2BIO+1Arc (Fibre 2 x BI/BO, 1 x Arc loop sensor, T2, T3, T4)	Slot 3 = A, G, H or I	
3		**I/O Card II**		
		A None		
		G 6DI+4DO (6 x DI, 4 x DO)		
		H 6DI+4DO (6 x DI, 4 x DO(NC))		
		I 10DI (10 x DI)		
4		**I/O Card III**		
		T 3xI (5/1A) + Io (5/1A) for motor differential protection	Slot 8 = E or F	
		1 3xI (5/1A) ringlug + Io (5/1A) for motor differential protection	Slot 8 = 1 or 2	
5	A	**I/O Card IV**		
		A None		
6		**Option card I**		
		A None		
		D 4Arc (4 x Arc sensor)		
		K RS232, IRIG-B		
7	A	**Future option**		
		A None		
8		**Analog measurement card (See application)**		
		E 3L(5/1A) + 2Io(5/1A+1/0,2A) + 4U	Slot 4 = T and Region = A or C or R	
		1 3L(5/1A) + 2Io (5/1A+1/0,2A) ringlug + 4U	Slot 4 = 1	
9		**Communication interface I**		
		A None		
		B RS232 (RS232, IRIG-B)		
		C RS232+RJ (RS232, IRIG-B + Ethernet RJ-45 100 Mbps)		
		D RS232+LC (RS232, IRIG-B + Ethernet LC 100 Mbps)		
		E 2xRS485 (2-wire)		
		F RS485+RJ (RS485 2-wire + Ethernet RJ-45 100 Mbps)		
		G RS485+LC (RS485 2-wire + Ethernet LC 100 Mbps)		
		N 2xRJ (Ethernet RJ 100 Mbps, RSTP)		
		O 2xLC (Ethernet LC 100 Mbps, RSTP)		
		P PP (Plastic/Plastic serial fibre)		
		R GG (Glass/Glass serial fibre)		
10	A	**Reserved**		
		A Reserved		
		Display type		
		B 128x128 (128 x 128 LCD matrix)		
		C 128x128Ext (128 x 128 LCD matrix, detachable) (1)		
		Nominal Digital Input voltage (voltage withstand)		
		A 24 Vdc/ac, (255 Vac/dc)		
		B 110 Vdc/ac, (255 Vac/dc)		
		C 220 Vdc/ac, (255 Vac/dc)		
	A	**Product version**		
		A Version 2.1, latest FW		
	A	**Future option**		
		A None		
		Region		
		A English, IEC		
		B English, ANSI	Slot 4 = 1 and Slot 8 = 1 or 2	
		C Chinese		
		R Russia		

(1) By default cable length is 2 m. In case other length is needed order separately VX001-1, VX001-3 or VX001-5 for 1 m, 3 m and 5 m respectively.

1. Choose your option
2. Mark your choice in the box below
3. Check your **order code:**

PowerLogic™ P3	M32					A	-		A			A	-			A	A	
Slot numbers		1	2	3	4	5	-	6	7	8	9	10					

Life Is On Schneider Electric

PowerLogic™ P3 Advanced

PowerLogic™ P3T32 Configuration

	T32	**Application**		
		T32	Transformer protection relay with differential protection	
1		**Nominal Supply Voltage [V]**		
		C	Power C 110...230 V (80...265 Vac/dc, 5 x DO heavy duty, A1, SF)	
		D	Power D 24...48 V (18...60 Vdc, 5 x DO heavy duty, A1, SF)	
2		**I/O Card I**		
		G	6DI+4DO (6 x DI, 4 x DO)	
		B	3BIO+2Arc (3 x BI/BO, 2 x Arc point sensor, T2, T3, T4)	Slot 3 = A, G, H or I
		C	F2BIO+1Arc (Fibre 2 x BI/BO, 1 x Arc loop sensor, T2, T3, T4)	Slot 3 = A, G, H or I
3		**I/O Card II**		
		A	None	
		G	6DI+4DO (6 x DI, 4 x DO)	
		H	6DI+4DO (6 x DI, 4 x DO(NC))	
		I	10DI (10 x DI)	
4		**I/O Card III**		
		T	3xI (5/1A) + Io (5/1A) for transformer differential protection	Slot 8 = E or F
		1	3xI (5/1A) ringlug + Io (5/1A) for transformer differential protection	Slot 8 = 1 or 2
5	A	**I/O Card IV**		
		A	None	
6		**Option card I**		
		A	None	
		D	4Arc (4 x Arc sensor)	
		K	RS232, IRIG-B	
7	A	**Future option**		
		A	None	
8		**Analog measurement card (See application)**		
		E	3L(5/1A) + 2Io(5/1A+1/0,2A) + 4U	Slot 4 = T and Region = A or C or R
		1	3L(5/1A) + 2Io (5/1A+1/0,2A) ringlug + 4U	Slot 4 = 1
9		**Communication interface I**		
		A	None	
		B	RS232 (RS232, IRIG-B)	
		C	RS232+RJ (RS232, IRIG-B + Ethernet RJ-45 100 Mbps)	
		D	RS232+LC (RS232, IRIG-B + Ethernet LC 100 Mbps)	
		E	2xRS485 (2-wire)	
		F	RS485+RJ (RS485 2-wire + Ethernet RJ-45 100 Mbps)	
		G	RS485+LC (RS485 2-wire + Ethernet LC 100 Mbps)	
		N	2xRJ (Ethernet RJ 100 Mbps, RSTP)	
		O	2xLC (Ethernet LC 100 Mbps, RSTP)	
		P	PP (Plastic/Plastic serial fibre)	
		R	GG (Glass/Glass serial fibre)	
10	A	**Reserved**		
		A	Reserved	
		Display type		
		B	128x128 (128 x 128 LCD matrix)	
		C	128x128Ext (128 x 128 LCD matrix, detachable) (1)	
		Nominal Digital Input voltage (voltage withstand)		
		A	24 Vdc/ac, (255 Vac/dc)	
		B	110 Vdc/ac, (255 Vac/dc)	
		C	220 Vdc/ac, (255 Vac/dc)	
	A	**Product version**		
		A	Version 2.1, latest FW	
	A	**Future option**		
		A	None	
		Region		
		A	English, IEC	
		B	English, ANSI	Slot 4 = 1 and Slot 8 = 1 or 2
		C	Chinese	
		R	Russia	

(1) By default cable length is 2 m. In case other length is needed order separately VX001-1, VX001-3 or VX001-5 for 1 m, 3 m and 5 m respectively.

1. Choose your option
2. Mark your choice in the box below
3. Check your **order code:**

PowerLogic™ P3	T32					A	-		A			A	-			A	A	
Slot numbers		1	2	3	4	5	-	6	7	8	9	10					

PowerLogic™ P3 Advanced

PowerLogic™ P3G30 Configuration

	G30	**Application**		
		G30	Generator protection	
1		**Nominal Supply Voltage [V]**		
		C	Power C 110...230 V (80...265 Vac/dc, 5 x DO heavy duty, A1, SF)	
		D	Power D 24...48 V (18...60 Vdc, 5 x DO heavy duty, A1, SF)	
2		**I/O Card I**		
		G	6DI+4DO (6 x DI, 4 x DO)	Slot 3 = A, G, H or I
		B	3BIO+2Arc (3 x BI/BO, 2 x Arc point sensor, T2, T3, T4)	Slot 3 = A, G, H or I
		C	F2BIO+1Arc (Fibre 2 x BI/BO, 1 x Arc loop sensor, T2, T3, T4)	Slot 3 = A, G, H or I
3		**I/O Card II**		
		A	None	Slot 4 = A
		G	6DI+4DO (6 x DI, 4 x DO)	Slot 4 = A, G, H or I
		H	6DI+4DO (6 x DI, 4 x DO(NC))	Slot 4 = A, H or I
		I	10DI (10 x DI)	Slot 4 = A or I
4		**I/O Card III**		
		A	None	Slot 5 = A or D
		G	6DI+4DO (6 x DI, 4 x DO)	Slot 5 = A, G, H or I
		H	6DI+4DO (6 x DI, 4 x DO(NC))	Slot 5 = A, H or I
		I	10DI (10 x DI)	Slot 5 = A or I
5		**I/O Card IV**		
		A	None	
		D	2IGBT (2 x IGBT High speed outputs), excludes I/O Card III, slot 4	Slot 4 = A
		G	6DI+4DO (6 x DI, 4 x DO)	
		H	6DI+4DO (6 x DI, 4 x DO(NC))	
		I	10DI (10 x DI)	
6		**Option card I**		
		A	None	
		D	4Arc (4 x Arc sensor)	
		K	RS232, IRIG-B	
7	A	**Future option**		
		A	None	
8		**Analog measurement card (See application)**		
		E	3L(5/1A) + 2Io(5/1A+1/0,2A) + 4U	Region = A, C or R
		N	3L(5/1A) + Io1(5/1A) + Io2CSH(2/20A) + 4U	Region = A, C or R
		1	3L(5/1A) + 2Io (5/1A+1/0,2A) ringlug + 4U	
		5	3L(5/1A) + Io1(5A) + Io2CSH(2/20A) RL + 4U	Region = A, C or R
9		**Communication interface I**		
		A	None	
		B	RS232 (RS232, IRIG-B)	
		C	RS232+RJ (RS232, IRIG-B + Ethernet RJ-45 100 Mbps)	
		D	RS232+LC (RS232, IRIG-B + Ethernet LC 100 Mbps)	
		E	2xRS485 (2-wire)	
		F	RS485+RJ (RS485 2-wire + Ethernet RJ-45 100 Mbps)	
		G	RS485+LC (RS485 2-wire + Ethernet LC 100 Mbps)	
		N	2xRJ (Ethernet RJ 100 Mbps, RSTP)	
		O	2xLC (Ethernet LC 100 Mbps, RSTP)	
		P	PP (Plastic/Plastic serial fibre)	
		R	GG (Glass/Glass serial fibre)	
10	A	**Reserved**		
		A	Reserved	
		Display type		
		B	128x128 (128 x 128 LCD matrix)	
		C	128x128Ext (128 x 128 LCD matrix, detachable) (1)	
		Nominal Digital Input voltage (voltage withstand)		
		A	24 Vdc/ac, (255 Vac/dc)	
		B	110 Vdc/ac, (255 Vac/dc)	
		C	220 Vdc/ac, (255 Vac/dc)	
	A	**Product version**		
		A	Version 2.1, latest FW	
	A	**Future option**		
		A	None	
		Region		
		A	English, IEC	
		B	English, ANSI	Slot 8 = 1 or 2
		C	Chinese	
		R	Russia	

(1) By default cable length is 2 m. In case other length is needed order separately VX001-1, VX001-3 or VX001-5 for 1 m, 3 m and 5 m respectively.

1. Choose your option
2. Mark your choice in the box below
3. Check your **order code:**

PowerLogic™ P3	G30						-		A			A	-			A	A	
Slot numbers		1	2	3	4	5	-	6	7	8	9	10						

Life Is On | Schneider Electric

PowerLogic™ P3 Advanced

PowerLogic™ P3G32 Configuration

	G32	**Application**		
		G32 Generator protection with differential protection		
1		**Nominal Supply Voltage [V]**		
		C	Power C 110...230 V (80...265 Vac/dc, 5 x DO heavy duty, A1, SF)	
		D	Power D 24...48 V (18...60 Vdc, 5 x DO heavy duty, A1, SF)	
2		**I/O Card I**		
		G	6DI+4DO (6 x DI, 4 x DO)	Slot 3 = A, G, H or I
		B	3BIO+2Arc (3 x BI/BO, 2 x Arc point sensor, T2, T3, T4)	Slot 3 = A, G, H or I
		C	F2BIO+1Arc (Fibre 2 x BI/BO, 1 x Arc loop sensor, T2, T3, T4)	Slot 3 = A, G, H or I
3		**I/O Card II**		
		A	None	
		G	6DI+4DO (6 x DI, 4 x DO)	
		H	6DI+4DO (6 x DI, 4 x DO(NC))	
		I	10DI (10 x DI)	
4		**I/O Card III**		
		T	3xI (5/1A) + Io (5/1A) for generator differential protection	Slot 8 = E or F
		1	3xI (5/1A) ringlug + Io (5/1A) for generator differential protection	Slot 8 = 1 or 2
5	A	**I/O Card IV**		
		A	None	
6		**Option card I**		
		A	None	
		D	4Arc (4 x Arc sensor)	
		K	RS232, IRIG-B	
7	A	**Future option**		
		A	None	
8		**Analog measurement card (See application)**		
		E	3L(5/1A) + 2Io(5/1A+1/0,2A) + 4U	Slot 4 = T and Region = A or C or R
		1	3L(5/1A) + 2Io (5/1A+1/0,2A) ringlug + 4U	Slot 4 = 1
9		**Communication interface I**		
		A	None	
		B	RS232 (RS232, IRIG-B)	
		C	RS232+RJ (RS232, IRIG-B + Ethernet RJ-45 100 Mbps)	
		D	RS232+LC (RS232, IRIG-B + Ethernet LC 100 Mbps)	
		E	2xRS485 (2-wire)	
		F	RS485+RJ (RS485 2-wire + Ethernet RJ-45 100 Mbps)	
		G	RS485+LC (RS485 2-wire + Ethernet LC 100 Mbps)	
		N	2xRJ (Ethernet RJ 100 Mbps, RSTP)	
		O	2xLC (Ethernet LC 100 Mbps, RSTP)	
		P	PP (Plastic/Plastic serial fibre)	
		R	GG (Glass/Glass serial fibre)	
10	A	**Reserved**		
		A	Reserved	
		Display type		
		B	128x128 (128 x 128 LCD matrix)	
		C	128x128Ext (128 x 128 LCD matrix, detachable) (1)	
		Nominal Digital Input voltage (voltage withstand)		
		A	24 Vdc/ac, (255 Vac/dc)	
		B	110 Vdc/ac, (255 Vac/dc)	
		C	220 Vdc/ac, (255 Vac/dc)	
	A	**Product version**		
		A	Version 2.1, latest FW	
	A	**Future option**		
		A	None	
		Region		
		A	English, IEC	
		B	English, ANSI	Slot 4 = 1 and Slot 8 = 1 or 2
		C	Chinese	
		R	Russia	

(1) By default cable length is 2 m. In case other length is needed order separately VX001-1, VX001-3 or VX001-5 for 1 m, 3 m and 5 m respectively.

1. Choose your option
2. Mark your choice in the box below
3. Check your **order code:**

PowerLogic™ P3	G32					A	-		A			A	-			A	A	
Slot numbers		1	2	3	4	5	-	6	7	8	9	10						

Accessories

Arc point sensors

Comm. Ref	Description		Used on
REL52801	VA1DA-20	Arc sensor, 20 m	P3F3x/P3M3x P3T3x/P3G3x
REL52802	VA1DA-20S-HF	Arc sensor, 20 m, shielded, halogen free	
REL52803	VA1DA-20S	Arc sensor, 20 m, shielded	
REL52804	VA1DA-6	Arc sensor, 6 m connect cable	
REL52805	VA1DA-6S-HF	Arc sensor, 6 m, halogen free	
REL52806	VA1DA-6S	Arc sensor, 6 m, shielded	
REL52807	VA1EH-20	Arc sensor, 20 m pipe sensor	
REL52808	VA1EH-20S	Arc sensor, 20 m pipe sensor, shielded	
REL52809	VA1EH-6	Arc sensor, 6 m pipe sensor	
REL52810	VA1EH-6S	Arc sensor, 6 m pipe sensor, shielded	
REL52839	VA1DA-6W	Arc sensor, 6 m, shielded at sensor end	
REL52840	VA1DA-20W	Arc sensor, 20 m, shielded at sensor end	
REL52851	VA2DV-3-SE	Arc sensor, 3 m, shielded, metal pipe	
REL52852	VA2DV-6-SE	Arc sensor, 6 m, shielded, metal pipe	

Arc fiber sensors

Comm. Ref	Description		Used on
REL52842	ARC SLM-1	Arc fiber sensor, 1 m	P3F3x/P3M3x P3T3x/P3G3x
REL52843	ARC SLM-5	Arc fiber sensor, 5 m	
REL52844	ARC SLM-10	Arc fiber sensor, 10 m	
REL52845	ARC SLM-15	Arc fiber sensor, 15 m	
REL52846	ARC SLM-20	Arc fiber sensor, 20 m	
REL52847	ARC SLM-25	Arc fiber sensor, 25 m	
REL52848	ARC SLM-30	Arc fiber sensor, 30 m	
REL52849	ARC SLM-40	Arc fiber sensor, 40 m	
REL52853	ARC SLM-50	Arc fiber sensor, 50 m	

RTD Modules

Comm. Ref	Description		Used on
REL52811	VIO12AASE	RTD module, 12pcs RTD inputs, Optical Tx	P3Ux0/P3F3x P3L3x/P3M3x P3T3x/P3G3x
REL52812	VIO12ABSE	RTD module, 12pcs RTD inputs, RS485	
REL52813	VIO12ACSE	RTD module, 12pcs RTD inputs, mA in/out	
REL52814	VIO12ADSE	RTD module, 12pcs RTD inputs, mA in/out	

Communication Port

Comm. Ref	Description		Used on
REL52815	VPA3CGSE	Profibus interface module PM106585	P3Ux0/P3F3x P3L3x/P3M3x P3T3x/P3G3x
REL52820	VSE002	RS485 module PM106581	

Fiber optic modules

Reference	Description		Used on
REL52816	VSE001-GGSE	Fiber optic module (Glass - Glass) PM106586	P3Ux0/P3F3x P3L3x/P3M3x P3T3x/P3G3x
REL52817	VSE001-GPSE	Fiber optic module (Glass - Plastic) PM106586	
REL52818	VSE001-PGSE	Fiber optic module (Plastic - Glass) PM106586	
REL52819	VSE001-PPSE	Fiber optic module (Plastic - Plastic) PM106586	

Life Is On Schneider Electric

Accessories

Additional Modules

Other accessories

Reference	Description		Used on
REL52822	USB cable	USB programming cable (Easergy Pro)	P3Ux0/P3F3x P3L3x/P3M3x P3T3x/P3G3x
REL52828	VYX001	Mounting plate for arc sensor Z-shape	
REL52829	VYX002	Mounting plate for arc sensor L-shape	
REL52831	VYX301	VSE00x wall fastening module	
REL52832	VYX695	Raising frame, P3x, 45 mm	P3F3x P3L3x/P3M3x P3T3x/P3G3x
REL52823	VX067	Split cable for COM 1-2 & COM 3-4 ports	
REL52824	VX072	Profibus cable	
REL52838	VX086	P3X (RS232) - COM 1-2 + 3-4 + IRIG B (3xD9)	
REL52842	P3XPAF	Wall mounted adapter	
REL52834	VYX860	Raising frame, P3U, 45 mm	P3Ux0
REL52833	P3UPSC	P3U panel seal cover	
REL52825	VX082	RS232 - VSE (1xD9) cable	
REL52826	VX083	RS232 - Remote/Ext. (3xD9) cable	
REL52827	VX084	RS232 - VPA 3CG cable (Profibus)	
REL52836	P3UWAF	Wall assembly frame	
REL52837	P3UPAV200	Adapter plate	
REL52844	P3UPAVS40	Adapter plate	

Additional Modules

Part No.	Qty.	Designation
Sensors		
59635		Core balance CT, Ø=120 mm (CSH120)
59636		Core balance CT, Ø=200 mm (CSH200)
59637		Core balance CT, Ø=300 mm (CSH300)
EMS59572		VT adapter
EMS59573		LPVT hub connector
03813519N0		1 phase LPCT TLP130 0,72 kV 130 mm diam 4m cable with intermediary connection
03818034N0		1 phase LPCT TLP130/a 0,72 kV 130 mm diam 6.5 m cable
03811060N0		1 phase LPCT TLP160 0,72 kV 160 mm diam 6.5 m cable
03811061N0		1 phase LPCT TLP190 0,72 kV 190 mm diam 6.5 m cable
03816498N0		1 phase LPVT 24 kV GIS type C
03816686N0		1 phase LPVT 12 kV GIS type C
03816695N0		1 phase LPVT 24 kV GIS type C
LPVT36GC		1 phase LPVT 36 kV GIS type C
LPVT17GNKT		1 phase LPVT 17,5 kV GIS type NKT
LPVT24GNKT		1 phase LPVT 24 kV GIS type NKT
LPVT36GNKT		1 phase LPVT 36 kV GIS type NKT
LPVT17GNE		1 phase LPVT 17,5 kV GIS type NEXANS, short cone
LPVT24GNE		1 phase LPVT 24 kV GIS type NEXANS, short cone
LPVT36GNE		1 phase LPVT 36 kV GIS type NEXANS, short cone

Part No.	Qty.	Designation
Sensors		
LPVT17A		1 phase LPVT 17,5kV AIS
LPVT17A		1 phase LPVT 17,5kV AIS
LPVT24A		1 phase LPCT 20kV AIS (24 kV)
REL51037*		LPIT Test Box
REL51089*		LPCT Test Socket with cover
REL51090*		LPCT Test Plug
REL51092*		LPVT Test Socket with cover
REL51093*		LPVT Test Plug
P7M12025		LPVT transducer
REL51095*		T-box 3-way RJ45 junction

NOTE: See your Schneider Electric representative for complete ordering information.
** Please contact Schneider Electric for availability.*

TOOLS

se.com

This international web site allows you to access all the Schneider Electric solutions and product information via:

- Comprehensive descriptions
- Range datasheets
- A download area
- Product selectors

You can also access information dedicated to your business and contact your Schneider Electric country support.

PM103687

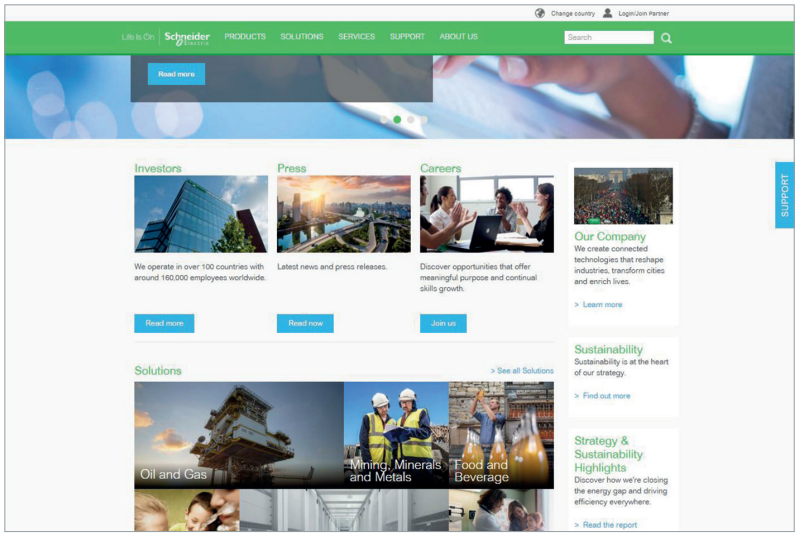

Web Selector

This site allows you to access the Schneider Electric products in just two clicks via a comprehensive range of datasheets, with direct links to:

- Complete libraries: technical documents, catalogs, FAQs, brochures
- Selection guides from the e-catalog
- Product discovery sites and their animations

You will also find illustrated overviews, news to which you can subscribe, and a list of country contacts.

Training

Training allows you to acquire the expertise (installation design, work with power on, etc.) to increase efficiency and improve customer service.

The training catalog includes beginner's courses in electrical distribution, knowledge of MV and LV switchgear, operation and maintenance of installations, and design of LV installations to give a few examples.

Notes

www.se.com

Schneider Electric Industries SAS
35, Rue Joseph Monier
CS 30323
92506 Rueil Malmaison Cedex

RCS Nanterre 954 503 439
Capital social 928 298 512 €
www.se.com

May 2024
PowerLogic™ P3
NRJCAT17764EN

© 2024 - Schneider Electric. All rights reserved.
All trademarks are owned by Schneider Electric Industries SAS or its affiliated companies.

As standards, specifications and designs develop from time to time, please ask for confirmation of the information given in this document.

Over 75 % of Schneider Electric products have been awarded the Green Premium ecolabel.