Product data sheet

Specifications

DIN rail meter, PowerLogic EM3570, Ethernet, LVDC, Rogowski CT input bundled with external Power Supply

METSEEM3570A

Product availability: Stock - Normally stocked in distribution facility

Main

Range	PowerLogic
range of product	PowerLogic EM3570
Device short name	EM3570A
Product or Component Type	Energy meter
Metering type	Peak demand power PM, QM, SM Current I1, I2, I3, Iavg Active, reactive, apparent energy (signed, four quadrant) Demand power P, Q, S Voltage U21, U32, U13, V1, V2, V3 Calculated neutral current

Complementary

Poles description	3P + N 2P + N 1P + N 3P
Type of measurement	Active and reactive power total Active and reactive power per phase Apparent power total Apparent power per phase Power factor total Power factor per phase Peak demand power Current Voltage Frequency Starting current selection range
Device Application	Partial meter Sub billing Multi-tariff
Accuracy class	Class 0.5 power IEC 61557-12 Class 0.5 energy IEC 61557-12 Class 0.5 power ANSI C12.20 Class 0.5 energy ANSI C12.20
Measurement accuracy	Active energy +/- 0.5 % Reactive energy +/- 2 % Reactive power +/- 2 % Apparent energy +/- 0.5 % Apparent power +/- 0.5 % Power factor +/- 0.005 Frequency +/- 0.5 % Voltage +/- 0.5 % Current +/- 0.5 %
input type	Rogowski coil 50...5000 A
Rated voltage	90…347 V phase to neutral (L-N)) 156…600 V phase to phase (L-L))
Network frequency	60 Hz +/- 10 % 50 Hz +/- 10 %

Price is “List Price” and may be subject to a trade discount – check with your local distributor or retailer for actual price.

Disclaimer: This documentation is not intended as a substitute for and is not to be used for determining suitability or reliability of these products for specific user applications

Technology Type	Electronic
Display Type	Backlit LCD
Display Resolution	126 x 94 pixels
Measurement current	1…32767 A
Display digits	5
Information displayed	Status and alert Communication IP address Input/output status Error Alarms Instant power per usage Firmware info Configurable summary page (average, total, demand, nominal values)
Tamperproof of settings	Protected by access code
Communication port protocol	Modbus TCP/IP BACnet IP HTTPS SNMP SNTP Link Layer Discovery Protocol
Communication port support	RJ45
Communication Service	Syslog protocol support
Data recording	Energy consumption logs Time stamping Data logs
Demand intervals	External synchronisation to communication Sliding/fixed/rolling block
Local signalling	Orange LED alarm / energy Green flashing LED operating state
number of accumulator inputs	2 digital
Number of Outputs	1 relay output
Memory capacity	32 GB
Buffer size	16-bit 10
[Ue] rated operational voltage	125...300 V DC external module 90...600 V AC 50/60 Hz external module
Power consumption in W	5 W
Mounting Mode	Clip-on
Mounting Support	DIN rail
Type of Installation	For indoor use in a stationary panel
Connections - terminals	Current circuit screw terminals 0.009 in² (6 mm²) Voltage circuit screw terminals 0.002 in² (1.5 mm²) Input circuit screw terminals 0.009 in² (6 mm²) Supply circuit screw terminals 0.006 in² (4 mm²) Relay output screw terminals 0.002 in² (1.5 mm²)
Tightening torque	Current circuit: 7.08 lbf.in (0.8 N.m) Voltage circuit: 4.4 lbf.in (0.5 N.m) Input circuit: 4.4 lbf.in (0.5 N.m) Supply circuit: 7.08 lbf.in (0.8 N.m) Relay output: 7.08 lbf.in (0.8 N.m)

Standards	IEC 61557-12 EN 61557-12 BS EN 61557-12 IEC 61326-1 EN 61326-1 BS EN 61326-1 IEC 61010-1 EN 61010-1 BS EN 61010-1 IEC 61010-2-30 EN 61010-2-30 BS EN 61010-2-30 UL 61010-1 UL 61010-2-30 UL 2808 CSA C22.2 No 61010-1-12 CSA C22.2 No 61010-2-30
Product certifications	CE UKCA CULus BTL
Web services	Real time viewing of data Network and protocol setting Data and time IP filtering

Environment

IP degree of protection	IP20 meter: IP40 display:
Pollution degree	2
Relative humidity	5…95 %
Ambient air temperature for operation	-13…158 °F (-25…70 °C)
Ambient Air Temperature for Storage	-40…185 °F (-40…85 °C)
Operating altitude	<= 9842.52 ft (3000 m)
Service life	15 year(s) 113 °F (45 °C) 60% RH
Color	White
Width	5.0 in (126 mm)
Height	3.6 in (91.4 mm)
Depth	2.8 in (70.6 mm)

Ordering and shipping details

Category	US10PL109798
Discount Schedule	0PL1
GTIN	3606481096500
Returnability	Yes
Country of origin	IN

Packing Units

Unit Type of Package 1	PCE
Nbr. of units in pkg.	1
Package 1 Height	3.740 in (9.500 cm)
Package 1 Width	4.331 in (11.000 cm)
Package 1 Length	5.512 in (14.000 cm)

Package weight(Lbs)	18.554 oz (526.000 g)
Unit Type of Package 2	S03
Number of Units in Package 2	12
Package 2 Height	11.811 in (30.000 cm)
Package 2 Width	11.811 in (30.000 cm)
Package 2 Length	15.748 in (40.000 cm)
Package 2 Weight	15.291 lb(US) (6.936 kg)

Contractual warranty

Warranty (in months)	18

Environmental Data

Schneider Electric aims to achieve Net Zero status by 2050 through supply chain partnerships, lower impact materials, and circularity via our ongoing “Use Better, Use Longer, Use Again” campaign to extend product lifetimes and recyclability.

Environmental Data explained >

How we assess product sustainability >

Environmental footprint

Total lifecycle Carbon footprint	**523 kg CO2 eq.**
Carbon footprint of the manufacturing phase [A1 to A3]	**84 kg CO2 eq.**
Carbon footprint of the distribution phase [A4]	**0.1 kg CO2 eq.**
Carbon footprint of the installation phase [A5]	**0 kg CO2 eq.**
Carbon footprint of the use phase [B2, B3, B4, B6]	**438 kg CO2 eq.**
Carbon footprint of the end-of-life phase [C1 to C4]	**0.3 kg CO2 eq.**
Environmental Disclosure	**Product Environmental Profile**

Use Better

Materials and Substances

Packaging made with recycled cardboard	**No**
Packaging without single use plastic	**Yes**
EU RoHS Directive	**Compliant By Exemption**
REACh Regulation	**Reference contains Substances of Very High Concern above the threshold**
California proposition 65	**WARNING: This product can expose you to chemicals including: Lead and lead compounds, which is known to the State of California to cause cancer and birth defects or other reproductive harm. For more information go to www.P65Warnings.ca.gov**

Use Longer

Lifetime extension

Repair	**No**

Use Again

Repack and remanufacture

Circularity Profile	**End of Life Information**
Take-back	**No**
WEEE Label	**The product must be disposed on European Union markets following specific waste collection and never end up in rubbish bins.**

Technical Illustration

Dimensions

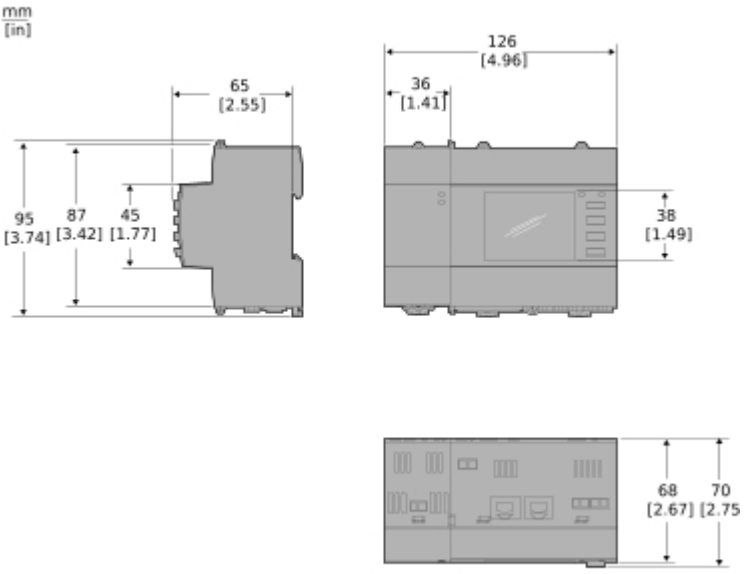

Technical illustration

Product Installation

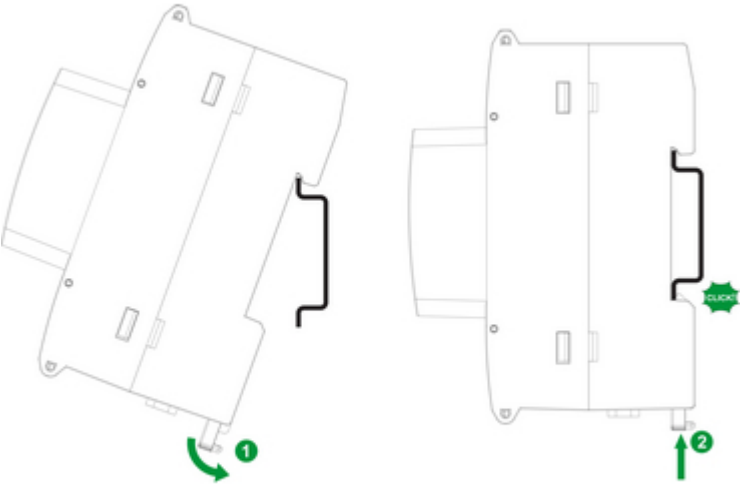

Technical Illustration

User interface / product ON

Technical Illustration
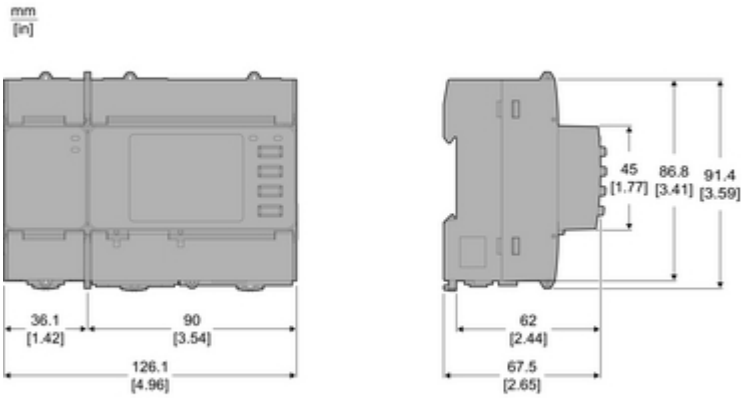
Assembly's dimensions