Product data sheet

Specifications

IEC contactor, TeSys Deca, nonreversing, 9A, 5HP at 480VAC, up to 100kA SCCR, 3 phase, 3 NO, low consumption 12VDC coil

LC1D09JL

Product availability: Stock - Normally stocked in distribution facility

Main

Range of Product	TeSys Deca
Product or Component Type	Contactor
Device short name	LC1D
Contactor application	Resistive load Motor control
Utilisation category	AC-4 AC-1 AC-3 AC-3e
Poles description	3P
[Ue] rated operational voltage	Power circuit <= 690 V AC 25...400 Hz Power circuit <= 300 V DC
[Ie] rated operational current	9 A (at <140 °F (60 °C)) at <= 440 V AC AC-3 for power circuit 25 A (at <140 °F (60 °C)) at <= 440 V AC AC-1 for power circuit 9 A (at <140 °F (60 °C)) at <= 440 V AC AC-3e for power circuit
[Uc] control circuit voltage	12 V DC

Complementary

Motor power kW	2.2 kW at 220...230 V AC 50/60 Hz (AC-3) 4 kW at 380...400 V AC 50/60 Hz (AC-3) 4 kW at 415...440 V AC 50/60 Hz (AC-3) 5.5 kW at 500 V AC 50/60 Hz (AC-3) 5.5 kW at 660...690 V AC 50/60 Hz (AC-3) 2.2 kW at 400 V AC 50/60 Hz (AC-4) 2.2 kW at 220...230 V AC 50/60 Hz (AC-3e) 4 kW at 380...400 V AC 50/60 Hz (AC-3e) 4 kW at 415...440 V AC 50/60 Hz (AC-3e) 5.5 kW at 500 V AC 50/60 Hz (AC-3e) 5.5 kW at 660...690 V AC 50/60 Hz (AC-3e)
Maximum Horse Power Rating	1 hp at 230/240 V AC 50/60 Hz for 1 phase motors 2 hp at 200/208 V AC 50/60 Hz for 3 phase motors 2 hp at 230/240 V AC 50/60 Hz for 3 phase motors 5 hp at 460/480 V AC 50/60 Hz for 3 phase motors 7.5 hp at 575/600 V AC 50/60 Hz for 3 phase motors 0.33 hp at 115 V AC 50/60 Hz for 1 phase motors
Compatibility code	LC1D
Pole contact composition	3 NO
Protective cover	With
[Ith] conventional free air thermal current	25 A (at 140 °F (60 °C)) for power circuit 10 A (at 140 °F (60 °C)) for signalling circuit
Irms rated making capacity	250 A at 440 V for power circuit conforming to IEC 60947 140 A AC for signalling circuit conforming to IEC 60947-5-1 250 A DC for signalling circuit conforming to IEC 60947-5-1

Price is “List Price” and may be subject to a trade discount – check with your local distributor or retailer for actual price.

Disclaimer: This documentation is not intended as a substitute for and is not to be used for determining suitability or reliability of these products for specific user applications

Rated breaking capacity	250 A at 440 V for power circuit conforming to IEC 60947
[Icw] rated short-time withstand current	105 A 104 °F (40 °C) - 10 s for power circuit 210 A 104 °F (40 °C) - 1 s for power circuit 30 A 104 °F (40 °C) - 10 min for power circuit 61 A 104 °F (40 °C) - 1 min for power circuit 100 A - 1 s for signalling circuit 120 A - 500 ms for signalling circuit 140 A - 100 ms for signalling circuit
Associated fuse rating	10 A gG for signalling circuit conforming to IEC 60947-5-1 25 A gG at <= 690 V coordination type 1 for power circuit 20 A gG at <= 690 V coordination type 2 for power circuit
Average impedance	2.5 mOhm - Ith 25 A 50 Hz for power circuit
Power dissipation per pole	1.56 W AC-1 0.2 W AC-3 0.2 W AC-3e
[Ui] rated insulation voltage	Power circuit 690 V IEC 60947-4-1 Power circuit 600 V CSA Power circuit 600 V UL Signalling circuit 690 V IEC 60947-1 Signalling circuit 600 V CSA Signalling circuit 600 V UL
Overvoltage category	III
Pollution degree	3
[Uimp] rated impulse withstand voltage	6 kV IEC 60947
Safety reliability level	B10d = 1369863 cycles contactor with nominal load EN/ISO 13849-1 B10d = 20000000 cycles contactor with mechanical load EN/ISO 13849-1
Mechanical durability	30 Mcycles
Electrical durability	0.6 Mcycles 25 A AC-1 <= 440 V 2 Mcycles 9 A AC-3 <= 440 V 2 Mcycles 9 A AC-3e <= 440 V
Control circuit type	DC low consumption
Coil technology	Built-in bidirectional peak limiting diode suppressor
Control circuit voltage limits	0.1...0.3 Uc (-40…158 °F (-40…70 °C)):drop-out DC 0.8...1.25 Uc (-40…140 °F (-40…60 °C)):operational DC 1...1.25 Uc (140…158 °F (60…70 °C)):operational DC
Inrush power in W	2.4 W 68 °F (20 °C))
Hold-in power consumption in W	2.4 W 68 °F (20 °C)
Operating time	77 ±15 % ms closing 25 ±20 % ms opening
Time constant	40 ms
Maximum operating rate	3600 cyc/h at 60 °C

Connections - terminals	Power circuit: screw clamp terminals 1 0.002…0.006 in² (1…4 mm²) - cable stiffness: flexible without cable end Power circuit: screw clamp terminals 2 0.002…0.006 in² (1…4 mm²) - cable stiffness: flexible without cable end Power circuit: screw clamp terminals 1 0.002…0.006 in² (1…4 mm²) - cable stiffness: flexible with cable end Power circuit: screw clamp terminals 2 0.002…0.004 in² (1…2.5 mm²) - cable stiffness: flexible with cable end Power circuit: screw clamp terminals 1 0.002…0.006 in² (1…4 mm²) - cable stiffness: solid without cable end Power circuit: screw clamp terminals 2 0.002…0.006 in² (1…4 mm²) - cable stiffness: solid without cable end Control circuit: screw clamp terminals 1 0.002…0.006 in² (1…4 mm²) - cable stiffness: flexible without cable end Control circuit: screw clamp terminals 2 0.002…0.006 in² (1…4 mm²) - cable stiffness: flexible without cable end Control circuit: screw clamp terminals 1 0.002…0.006 in² (1…4 mm²) - cable stiffness: flexible with cable end Control circuit: screw clamp terminals 2 0.002…0.004 in² (1…2.5 mm²) - cable stiffness: flexible with cable end Control circuit: screw clamp terminals 1 0.002…0.006 in² (1…4 mm²) - cable stiffness: solid without cable end Control circuit: screw clamp terminals 2 0.002…0.006 in² (1…4 mm²) - cable stiffness: solid without cable end
Tightening torque	Power circuit 15.05 lbf.in (1.7 N.m) screw clamp terminals flat Ø 6 mm Power circuit 15.05 lbf.in (1.7 N.m) screw clamp terminals Philips No 2 Control circuit 15.05 lbf.in (1.7 N.m) screw clamp terminals flat Ø 6 mm Control circuit 15.05 lbf.in (1.7 N.m) screw clamp terminals Philips No 2 Control circuit 15.05 lbf.in (1.7 N.m) screw clamp terminals pozidriv No 2 Power circuit 15.05 lbf.in (1.7 N.m) screw clamp terminals pozidriv No 2
Auxiliary contact composition	1 NO + 1 NC
Auxiliary contacts type	Mechanically linked 1 NO + 1 NC IEC 60947-5-1 Mirror contact 1 NC IEC 60947-4-1
Signalling circuit frequency	25...400 Hz
Minimum switching voltage	17 V for signalling circuit
Minimum switching current	5 mA for signalling circuit
Insulation resistance	> 10 MOhm for signalling circuit
Non-overlap time	1.5 ms on de-energisation between NC and NO contact 1.5 ms on energisation between NC and NO contact
Mounting Support	Plate Rail

Environment

Standards	CSA C22.2 No 14 EN 60947-4-1 EN 60947-5-1 IEC 60947-4-1 IEC 60947-5-1 UL 60947-4-1 IEC 60335-1:Clause 30.2 IEC 60335-2-40:Annex JJ UL 60335-2-40:Annex JJ CSA C22.2 No 60947-4-1
Product Certifications	UL CCC CSA Marine UKCA EAC CB Scheme
IP degree of protection	IP20 front face IEC 60529
Protective treatment	THIEC 60068-2-30
Climatic withstand	IACS E10 exposure to damp heat IEC 60947-1 Annex Q category D exposure to damp heat

Permissible ambient air temperature around the device	-40…140 °F (-40…60 °C) 140…158 °F (60…70 °C) with derating
Operating altitude	0...9842.52 ft (0...3000 m)
Fire resistance	1562 °F (850 °C) IEC 60695-2-1
Flame retardance	V1 conforming to UL 94
Mechanical robustness	Vibrations contactor open 2 Gn, 5...300 Hz) Vibrations contactor closed 4 Gn, 5...300 Hz) Shocks contactor open 10 Gn for 11 ms) Shocks contactor closed 15 Gn for 11 ms)
Height	3.03 in (77 mm)
Width	1.8 in (45 mm)
Depth	3.7 in (95 mm)
Product Weight	1.06 lb(US) (0.48 kg)

Ordering and shipping details

Category	US10I1222354
Discount Schedule	0I12
GTIN	3389110361216
Returnability	Yes
Country of origin	ID

Packing Units

Unit Type of Package 1	PCE
Nbr. of units in pkg.	1
Package 1 Height	2.047 in (5.200 cm)
Package 1 Width	3.661 in (9.300 cm)
Package 1 Length	4.488 in (11.400 cm)
Package weight(Lbs)	18.342 oz (520.000 g)

Contractual warranty

Warranty (in months)	18

Environmental Data

Schneider Electric aims to achieve Net Zero status by 2050 through supply chain partnerships, lower impact materials, and circularity via our ongoing “Use Better, Use Longer, Use Again” campaign to extend product lifetimes and recyclability.

Environmental Data explained >

How we assess product sustainability >

Environmental footprint

Total lifecycle Carbon footprint	**19 kg CO2 eq.**
Carbon footprint of the manufacturing phase [A1 to A3]	**3 kg CO2 eq.**
Carbon footprint of the distribution phase [A4]	**0.1 kg CO2 eq.**
Carbon footprint of the installation phase [A5]	**0 kg CO2 eq.**
Carbon footprint of the use phase [B2, B3, B4, B6]	**15 kg CO2 eq.**
Carbon footprint of the end-of-life phase [C1 to C4]	**1 kg CO2 eq.**
Environmental Disclosure	**Product Environmental Profile**

Use Better

Materials and Substances

Packaging made with recycled cardboard	**Yes**
Packaging without single use plastic	**Yes**
SCIP Number	**50ae7612-fd2e-41e4-a369-50d0dea6e592**
EU RoHS Directive	**Compliant By Exemption**
REACh Regulation	**Reference contains Substances of Very High Concern above the threshold**
California proposition 65	**WARNING: This product can expose you to chemicals including: Antimony oxide & Antimony trioxide, which is known to the State of California to cause cancer. For more information go to www.P65Warnings.ca.gov**
PVC free	**Yes**

Use Longer

Lifetime extension

Repair	**No**

Use Again

Repack and remanufacture

Recyclability potential, in %	**75**
Circularity Profile	**End of Life Information**
Take-back	**No**
WEEE Label	**The product must be disposed on European Union markets following specific waste collection and never end up in rubbish bins.**

Technical Illustration

Dimensions

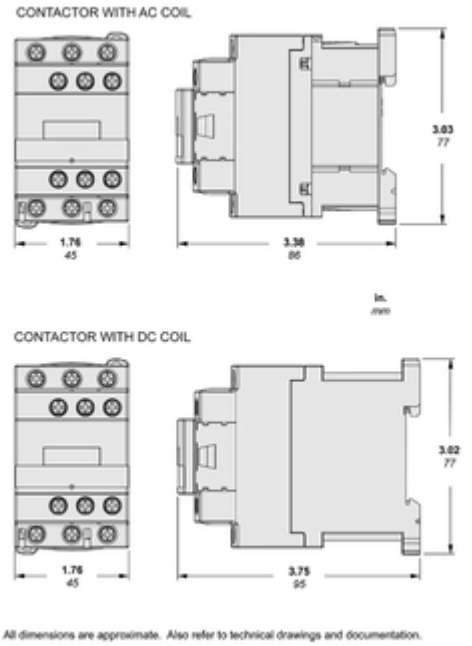

All dimensions are approximate. Also refer to technical drawings and documentation.

Offer Marketing Illustration

Product benefits / Features

Offer Marketing Illustration

Product benefits / Features

Offer Marketing Illustration

Product benefits / Features

Image of product / Alternate images
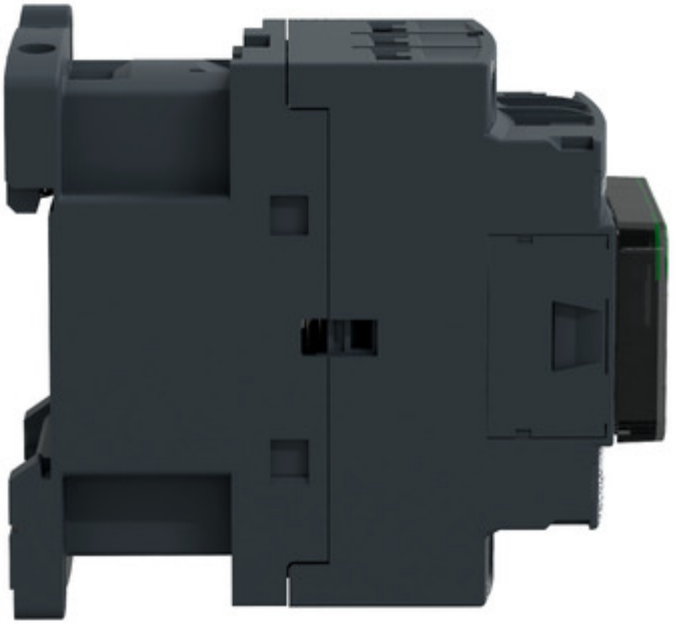
Alternative